1 HIACE

(Cont. next page)

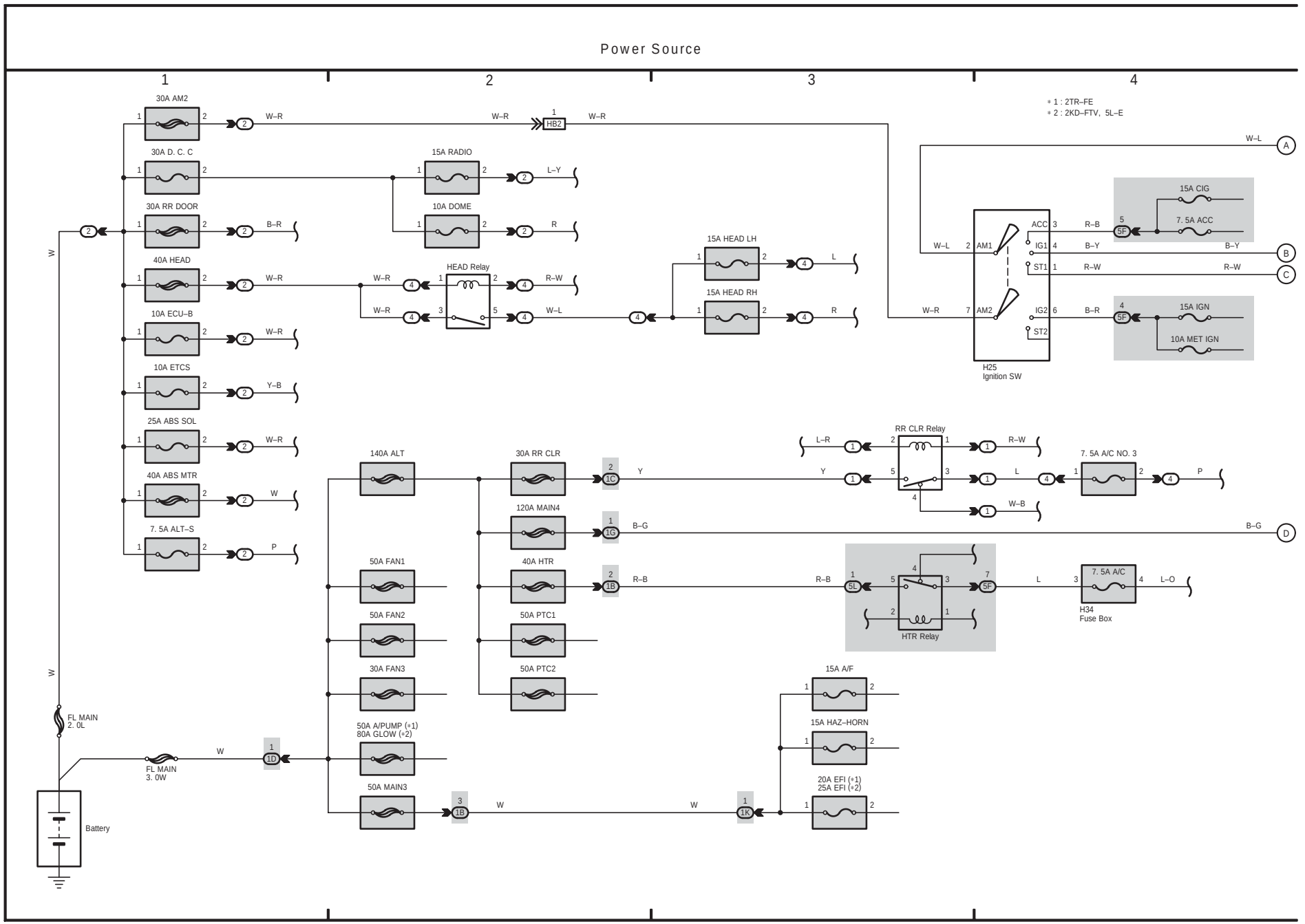

## 1 HIACE (Cont' d)

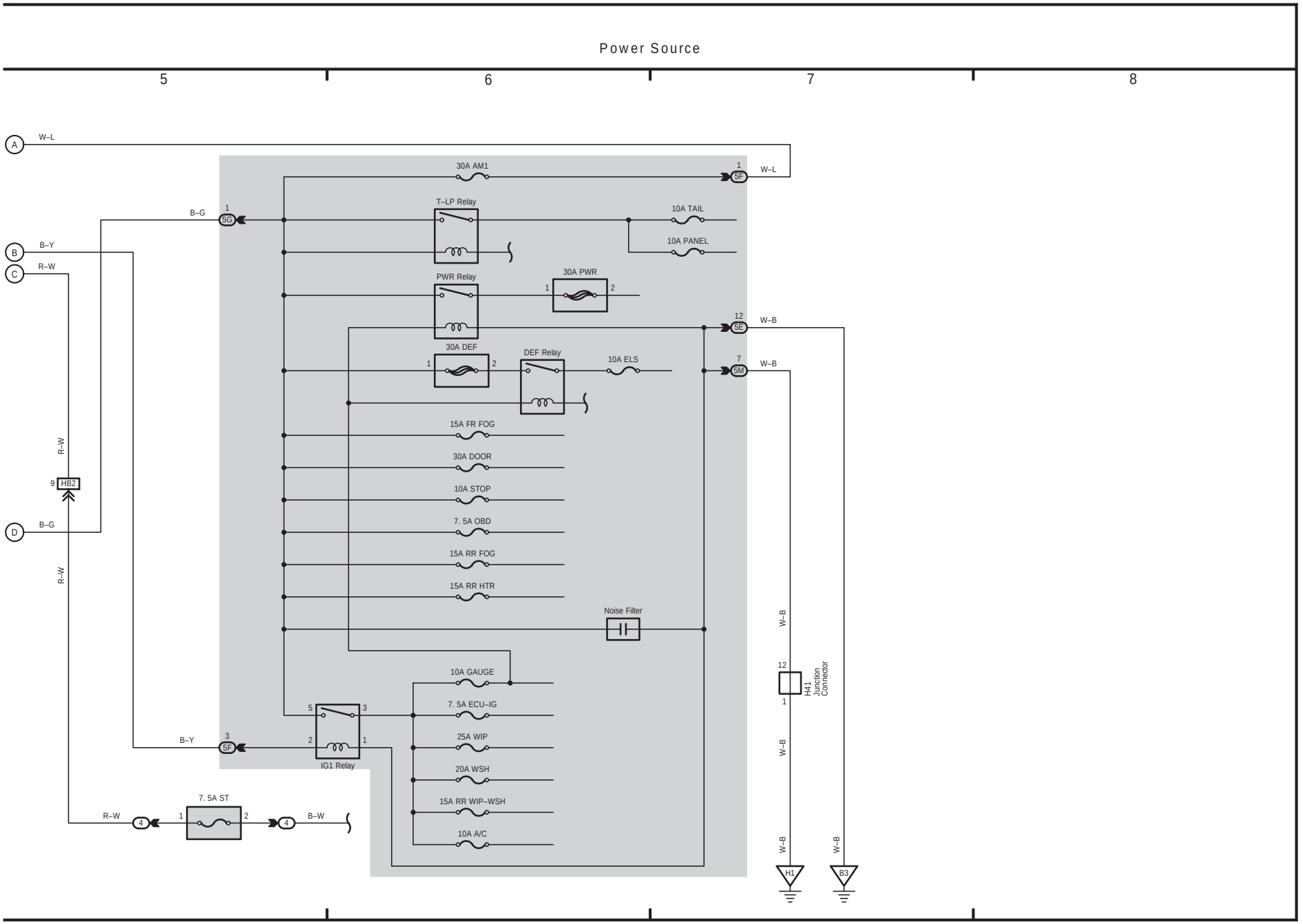

## 2 HIACE

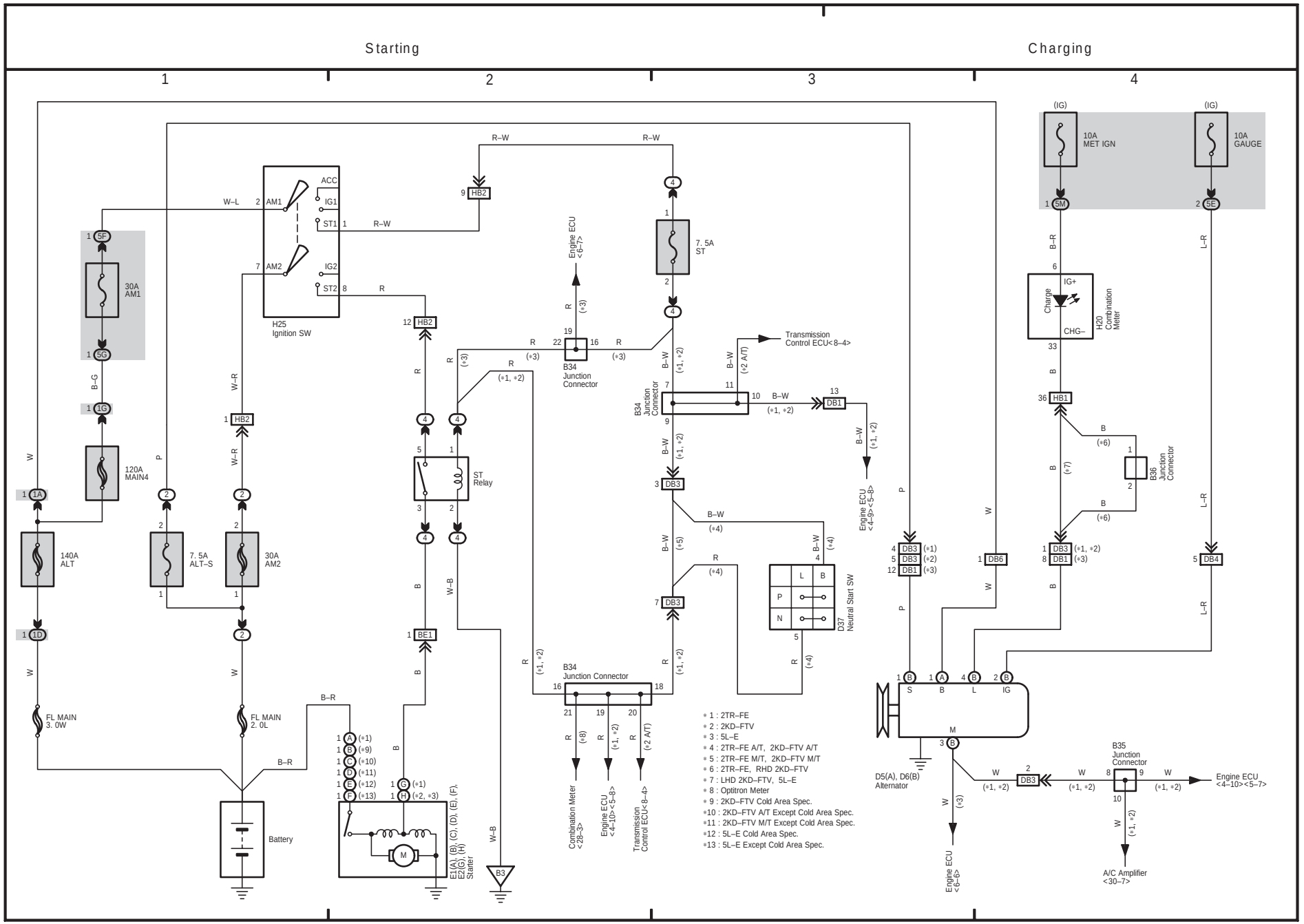
Starting
Charging
1
2
3
4
H25
Ignition SW
ACC
IG1
ST1
IG2
ST2
AM1
AM2
30A
AM1
120A
MAIN4
140A
ALT
7. 5A
ALT–S
30A
AM2
FL MAIN
3. 0W
FL MAIN
2. 0L
Battery
ST
Relay
7. 5A
ST
B34
Junction
Connector
Engine ECU
<6–7>
Transmission
Control ECU<8–4>
Engine ECU
<4–9><5–8>
Combination Meter
<28–3>
Engine ECU
<4–10><5–8>
Transmission
Control ECU<8–4>
D37
Neutral Start SW
E1(A), (B), (C), (D), (E), (F),
E2(G), (H)
Starter
B3
10A
MET IGN
10A
GAUGE
H20
Combination
Meter
B36
Junction
Connector
D5(A), D6(B)
Alternator
B35
Junction
Connector
Engine ECU
<4–10><5–7>
Engine ECU
<6–6>
A/C Amplifier
<30–7>
∗ 1 : 2TR–FE
∗ 2 : 2KD–FTV
∗ 3 : 5L–E
∗ 4 : 2TR–FE A/T, 2KD–FTV A/T
∗ 5 : 2TR–FE M/T, 2KD–FTV M/T
∗ 6 : 2TR–FE, RHD 2KD–FTV
∗ 7 : LHD 2KD–FTV, 5L–E
∗ 8 : Optitron Meter
∗ 9 : 2KD–FTV Cold Area Spec.
∗10 : 2KD–FTV A/T Except Cold Area Spec.
∗11 : 2KD–FTV M/T Except Cold Area Spec.
∗12 : 5L–E Cold Area Spec.
∗13 : 5L–E Except Cold Area Spec.

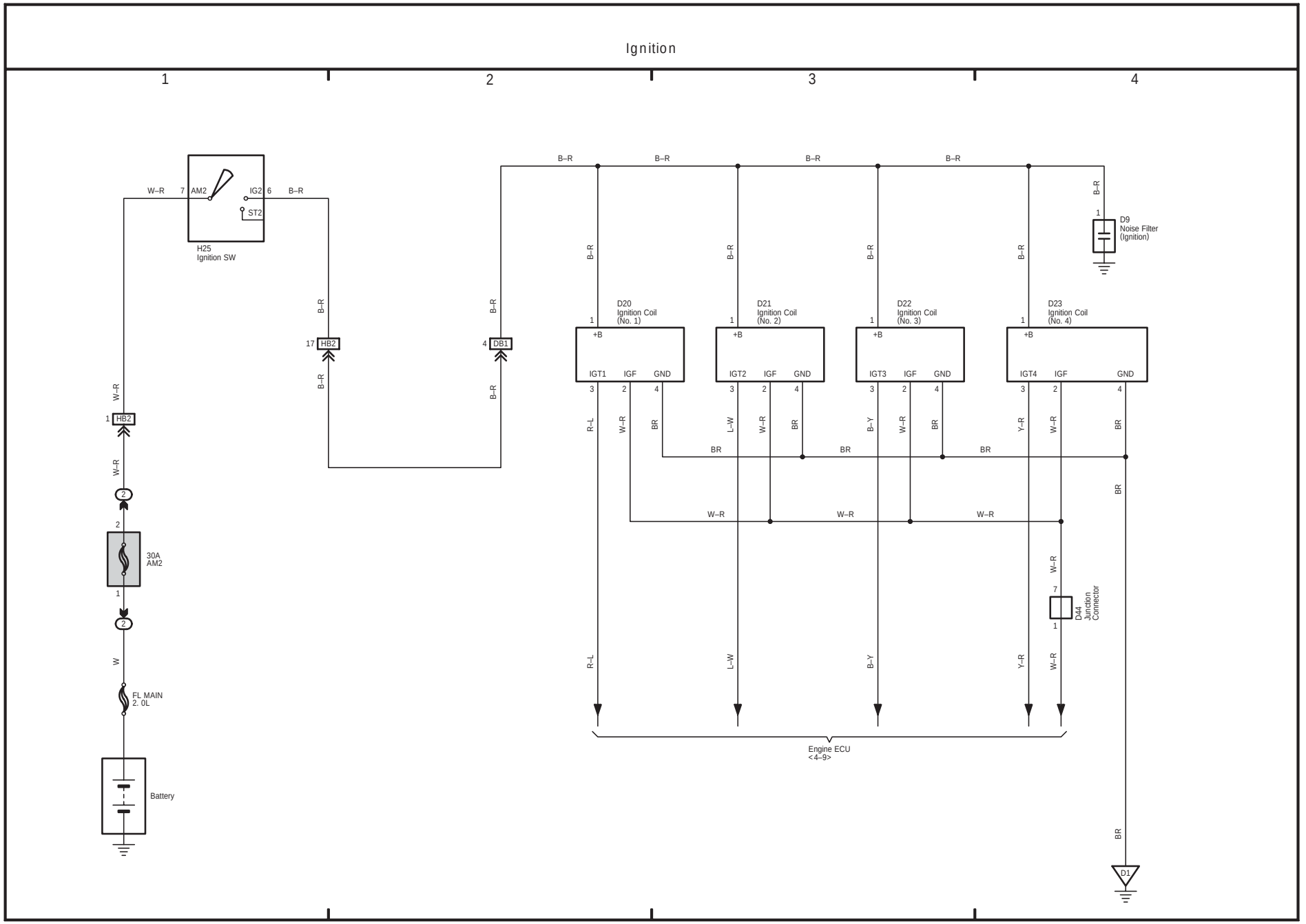
Ignition
1
2
3
4
H25
Ignition SW
W–R
7 AM2
IG2 6
B–R
ST2
B–R
17 HB2
4 DB1
B–R
W–R
1 HB2
W–R
2
2
30A
AM2
1
2
W
FL MAIN
2. 0L
Battery
B–R
B–R
B–R
B–R
B–R
D20
Ignition Coil
(No. 1)
D21
Ignition Coil
(No. 2)
D22
Ignition Coil
(No. 3)
D23
Ignition Coil
(No. 4)
+B
IGT1 IGF GND
IGT2 IGF GND
IGT3 IGF GND
IGT4 IGF GND
R–L
W–R
BR
L–W
B–Y
Y–R
BR
W–R
D9
Noise Filter
(Ignition)
D44
Junction
Connector
Engine ECU
<4–9>
D1

(Cont. next page)

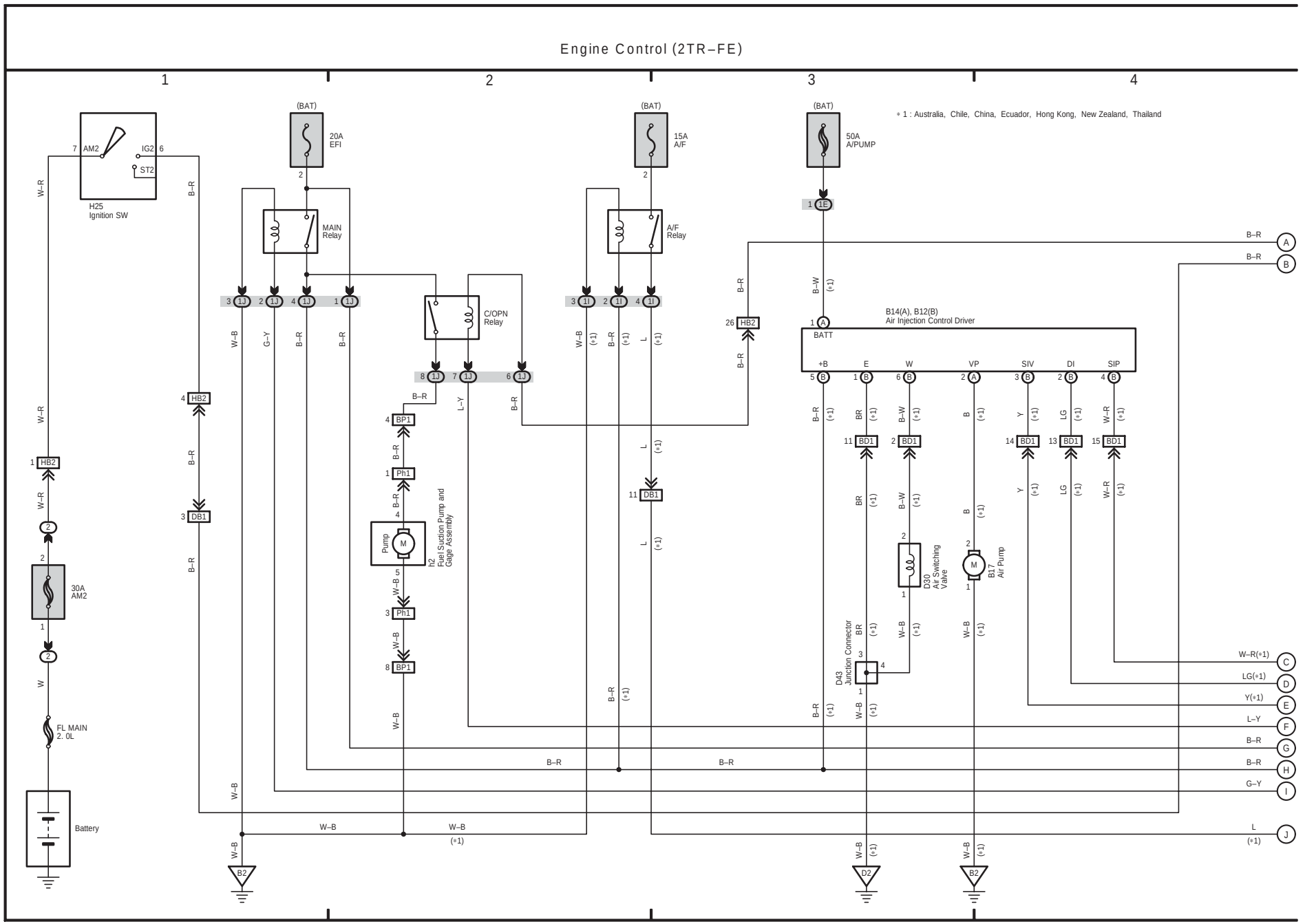

(Cont. next page)

Engine Control (2TR–FE)

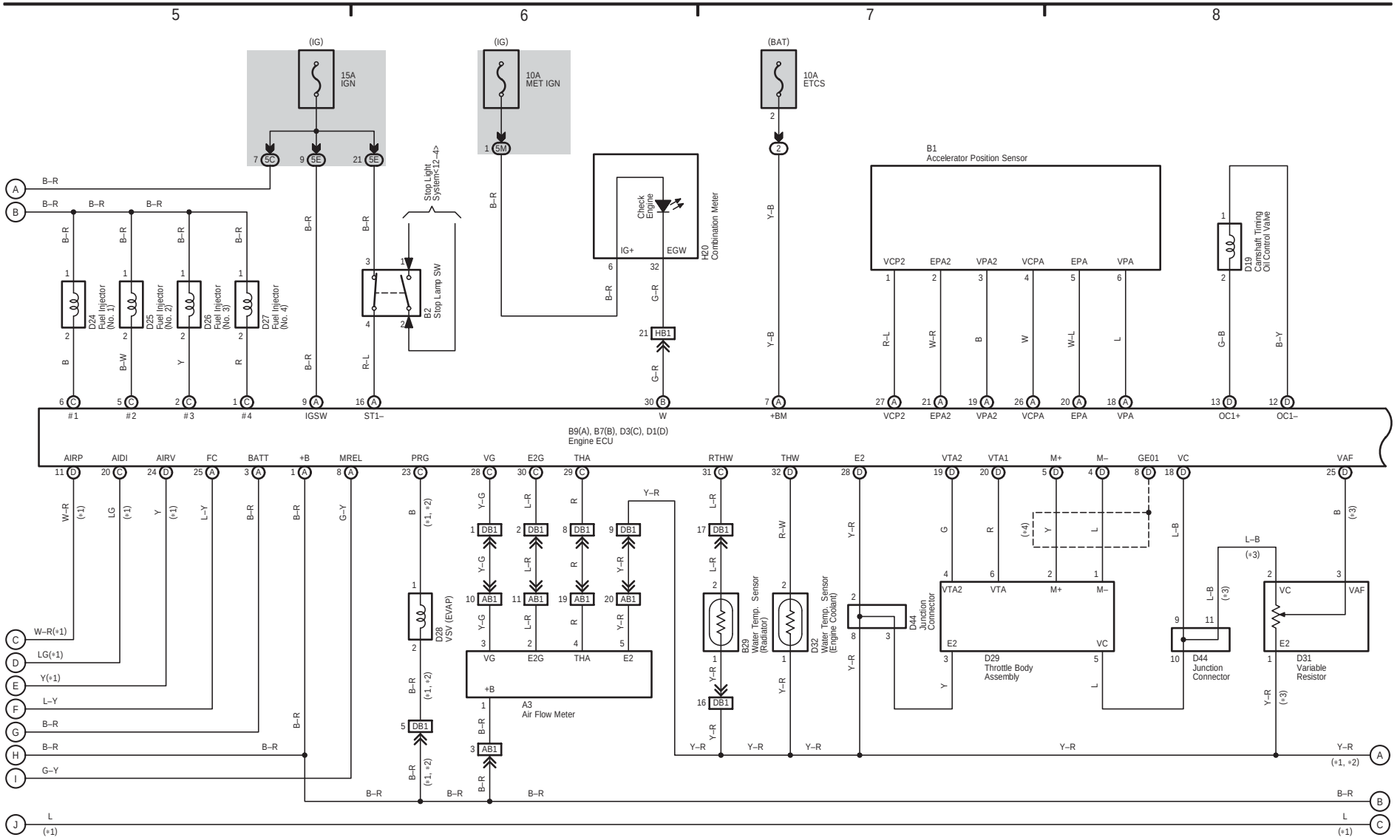

## 4 HIACE (Cont' d)

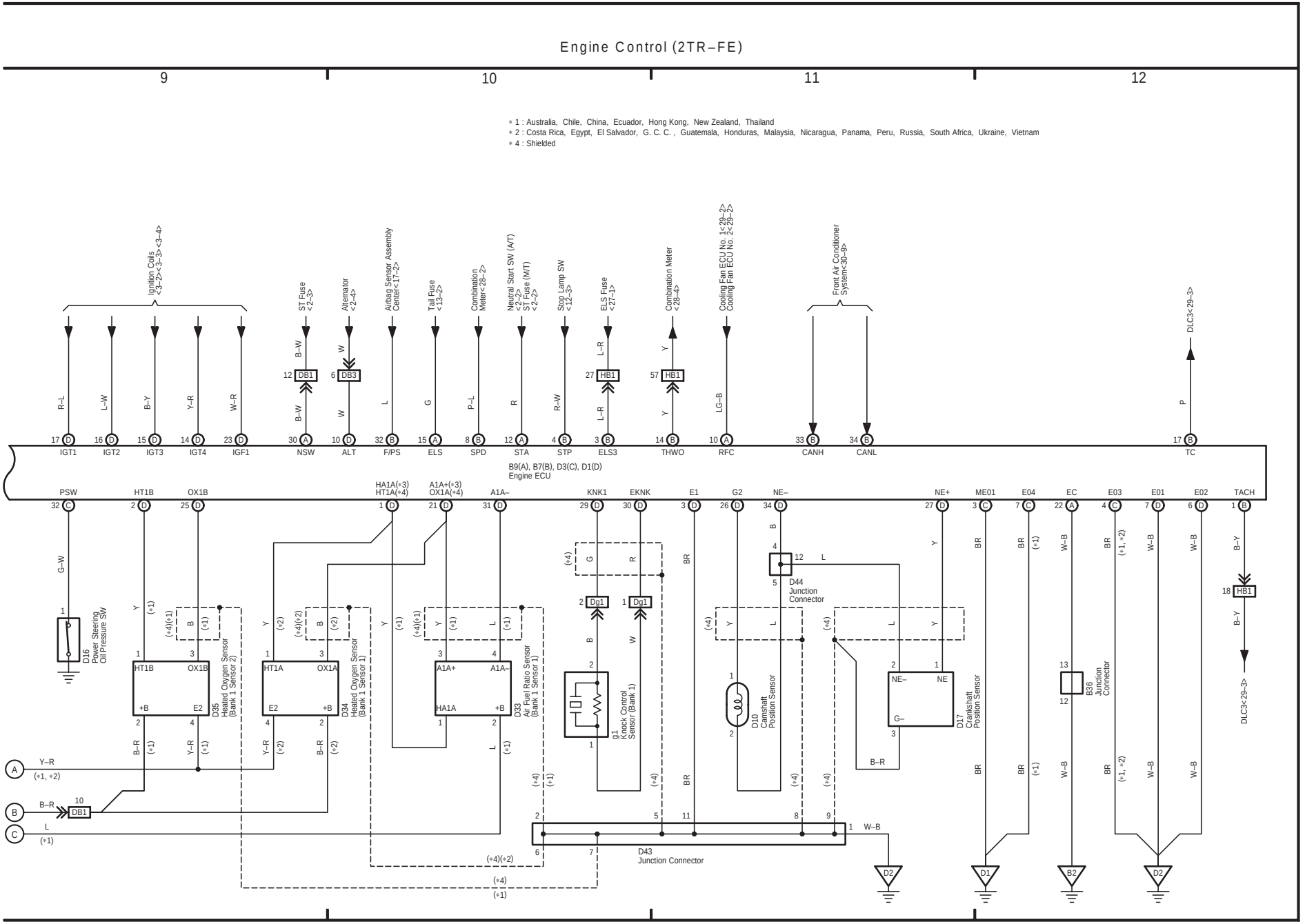

(Cont. next page)

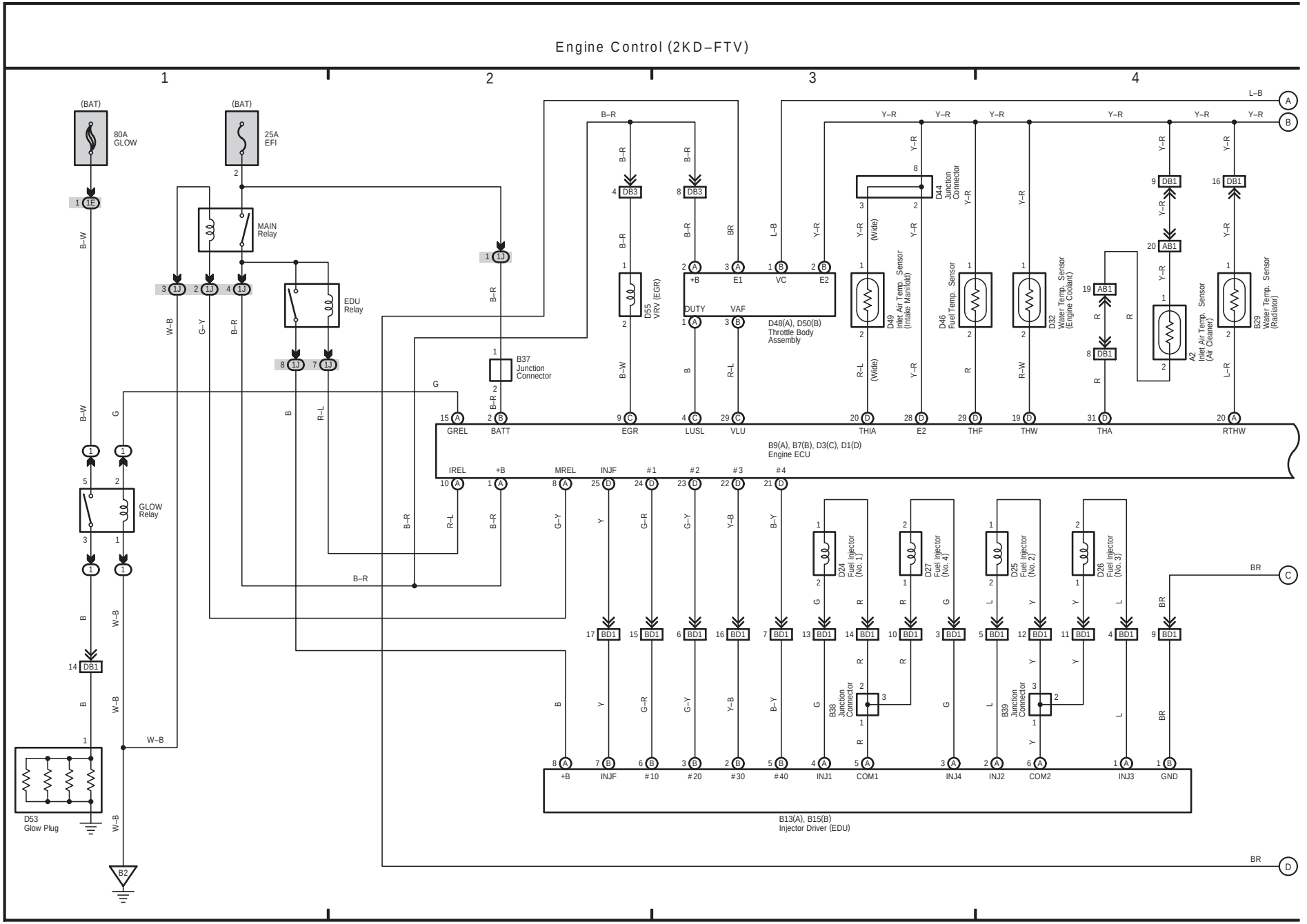

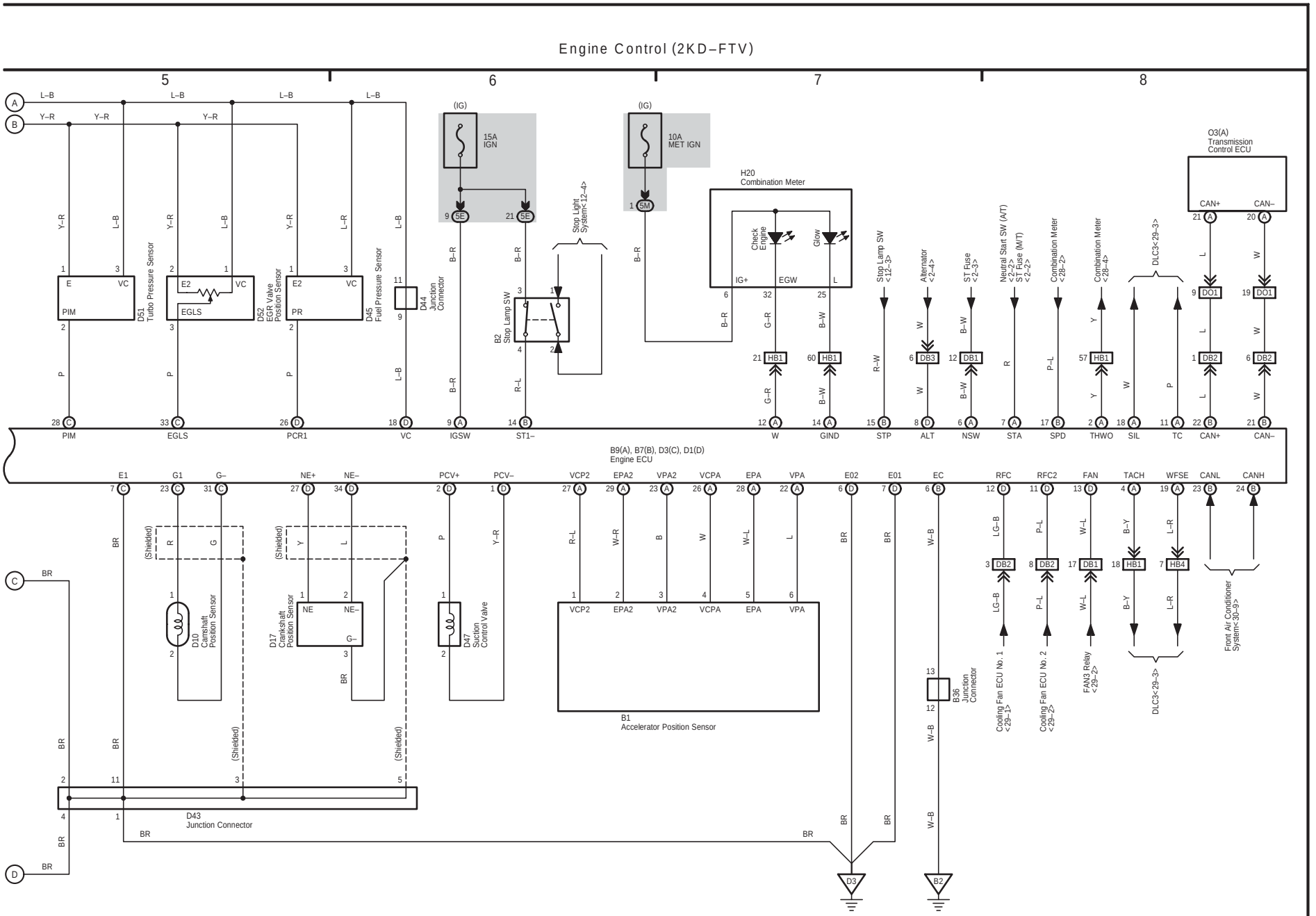
Engine Control (2KD–FTV)
5
6
7
8
D51 Turbo Pressure Sensor
D52 EGR Valve Position Sensor
D45 Fuel Pressure Sensor
D44 Junction Connector
15A IGN
10A MET IGN
B2 Stop Lamp SW
Stop Light System<12–4>
H20 Combination Meter
Check Engine
Glow
O3(A) Transmission Control ECU
B9(A), B7(B), D3(C), D1(D) Engine ECU
D10 Camshaft Position Sensor
D17 Crankshaft Position Sensor
D47 Suction Control Valve
B1 Accelerator Position Sensor
D43 Junction Connector
B36 Junction Connector
Cooling Fan ECU No. 1 <29–1>
Cooling Fan ECU No. 2 <29–2>
FAN3 Relay <29–2>
DLC3<29–3>
Front Air Conditioner System<30–3>
PIM
EGLS
PCR1
VC
IGSW
ST1–
W
GIND
STP
ALT
NSW
STA
SPD
THWO
SIL
TC
CAN+
CAN–
E1
G1
G–
NE+
NE–
PCV+
PCV–
VCP2
EPA2
VPA2
VCPA
EPA
VPA
E02
E01
EC
RFC
RFC2
FAN
TACH
WFSE
CANL
CANH

(Cont. next page)

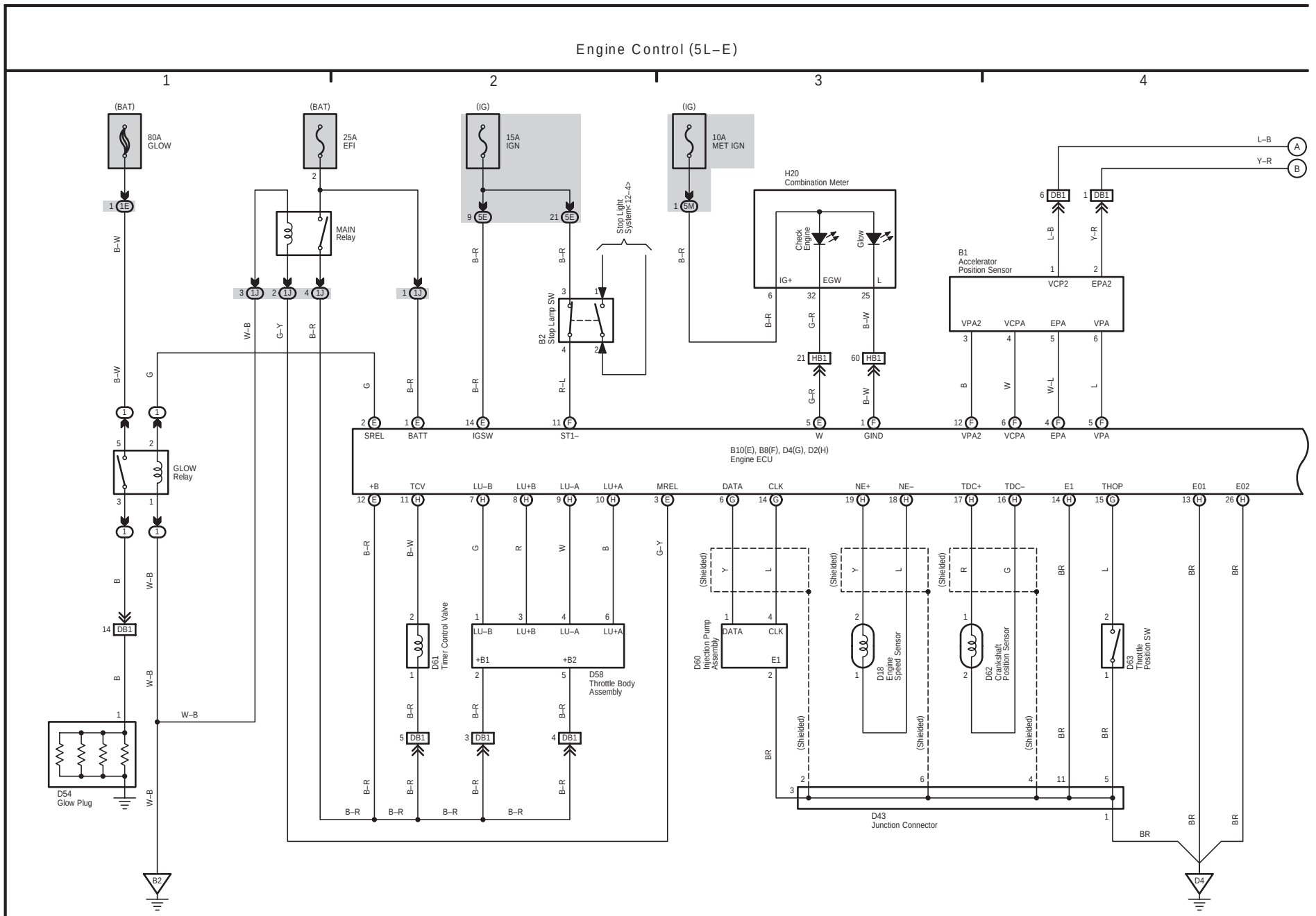

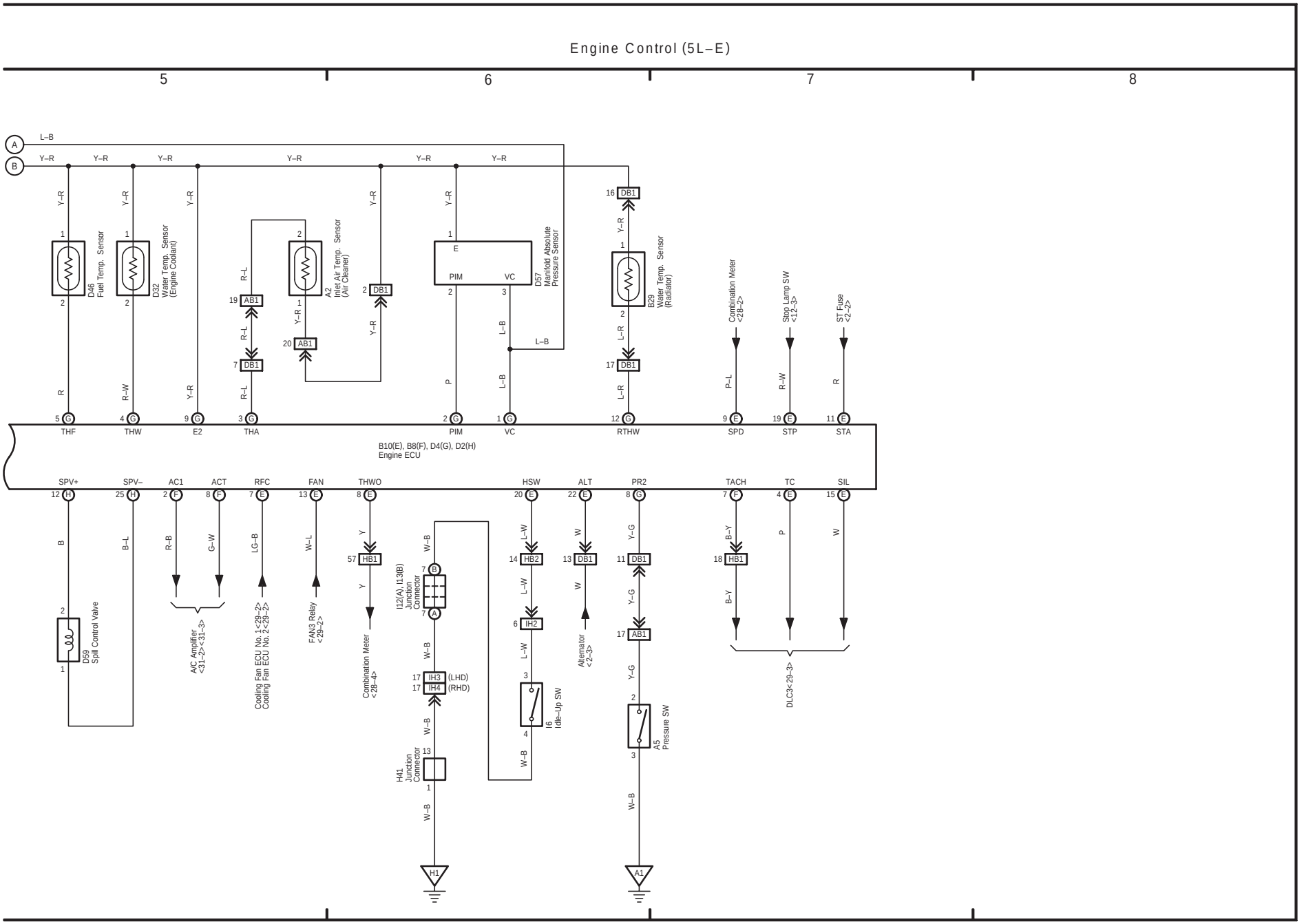
Engine Control (5L–E)
5
6
7
8
L–B
Y–R
D46
Fuel Temp. Sensor
D32
Water Temp. Sensor
(Engine Coolant)
A2
Inlet Air Temp. Sensor
(Air Cleaner)
D57
Manifold Absolute
Pressure Sensor
B29
Water Temp. Sensor
(Radiator)
Combination Meter
<28–2>
Stop Lamp SW
<12–3>
ST Fuse
<2–2>
THF
THW
E2
THA
PIM
VC
RTHW
SPD
STP
STA
B10(E), B8(F), D4(G), D2(H)
Engine ECU
SPV+
SPV–
AC1
ACT
RFC
FAN
THWO
HSW
ALT
PR2
TACH
TC
SIL
D59
Spill Control Valve
A/C Amplifier
<31–2><31–3>
Cooling Fan ECU No. 1<29–2>
Cooling Fan ECU No. 2<29–2>
FAN3 Relay
<29–2>
Combination Meter
<28–4>
I12(A), I13(B)
Junction
Connector
H41
Junction
Connector
(LHD)
(RHD)
I6
Idle–Up SW
Alternator
<2–3>
A5
Pressure SW
DLC3<29–3>
H1
A1

(Cont. next page)

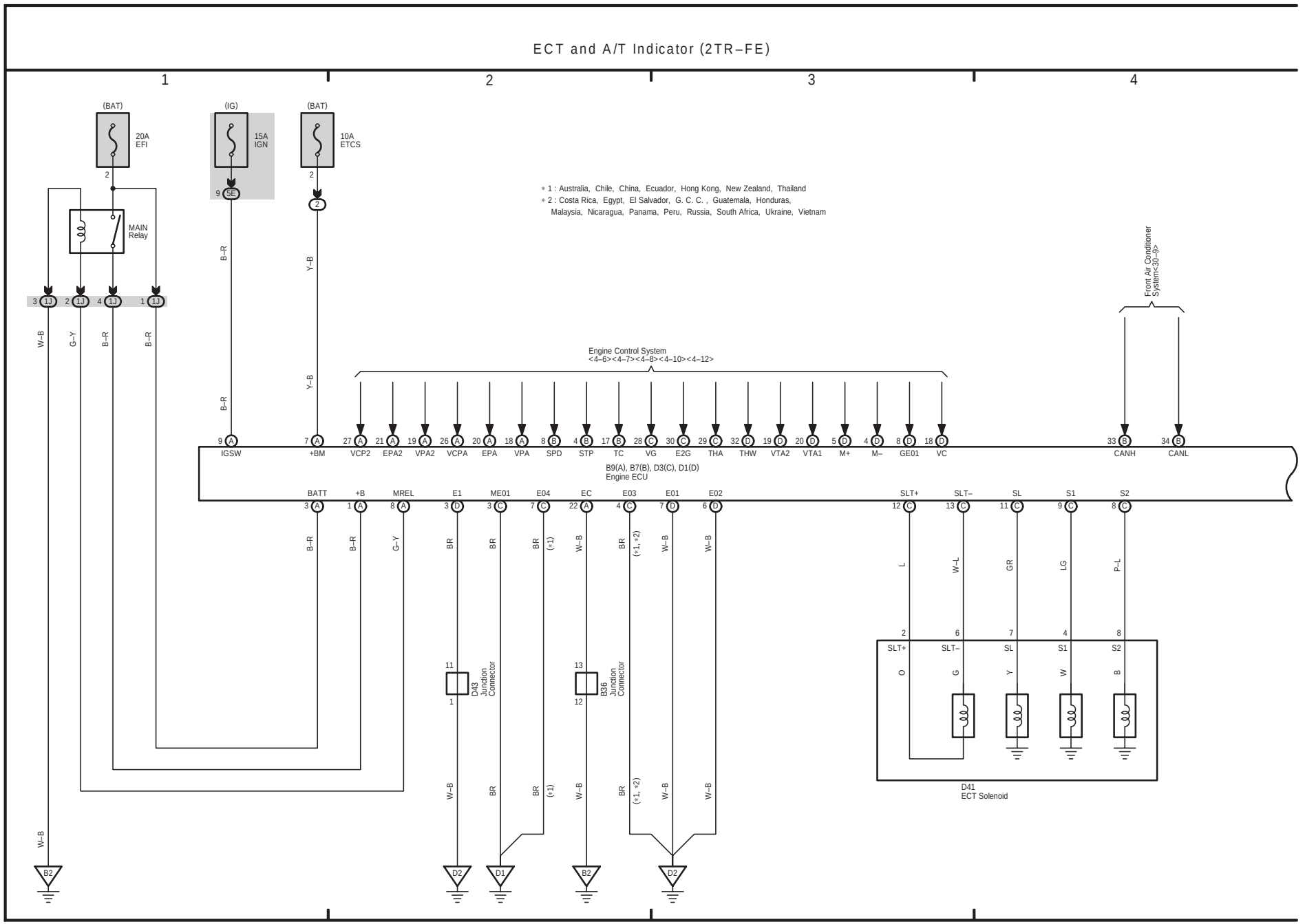

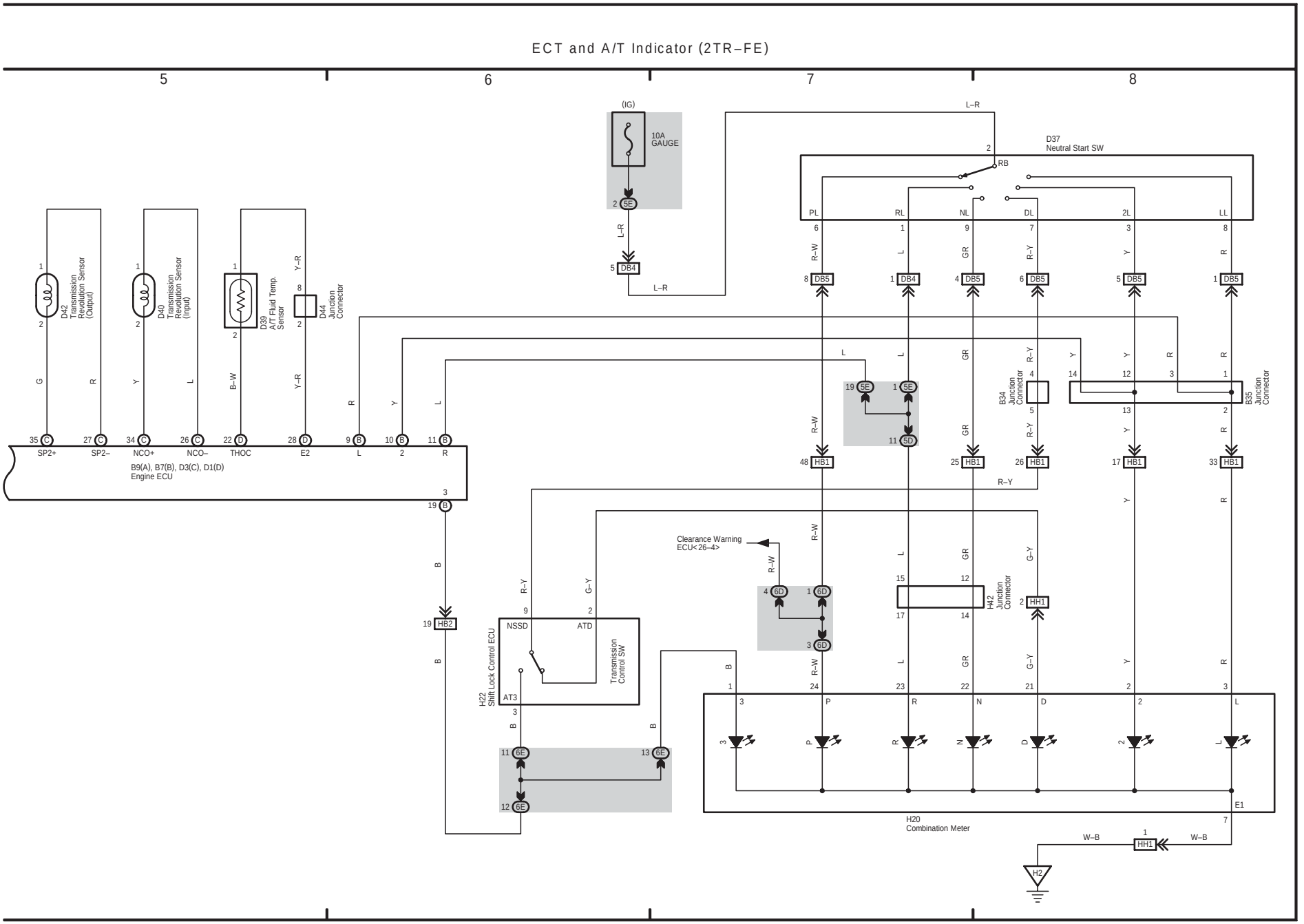
ECT and A/T Indicator (2TR–FE)
5
6
7
8
(IG)
10A GAUGE
L–R
D37 Neutral Start SW
RB
PL
RL
NL
DL
2L
LL
D42 Transmission Revolution Sensor (Output)
D40 Transmission Revolution Sensor (Input)
D39 A/T Fluid Temp. Sensor
D44 Junction Connector
B34 Junction Connector
B35 Junction Connector
SP2+
SP2–
NCO+
NCO–
THOC
E2
B9(A), B7(B), D3(C), D1(D) Engine ECU
Clearance Warning ECU<26–4>
H42 Junction Connector
H22 Shift Lock Control ECU
NSSD
ATD
AT3
Transmission Control SW
P
R
N
D
2
L
H20 Combination Meter
W–B
H2

(Cont. next page)

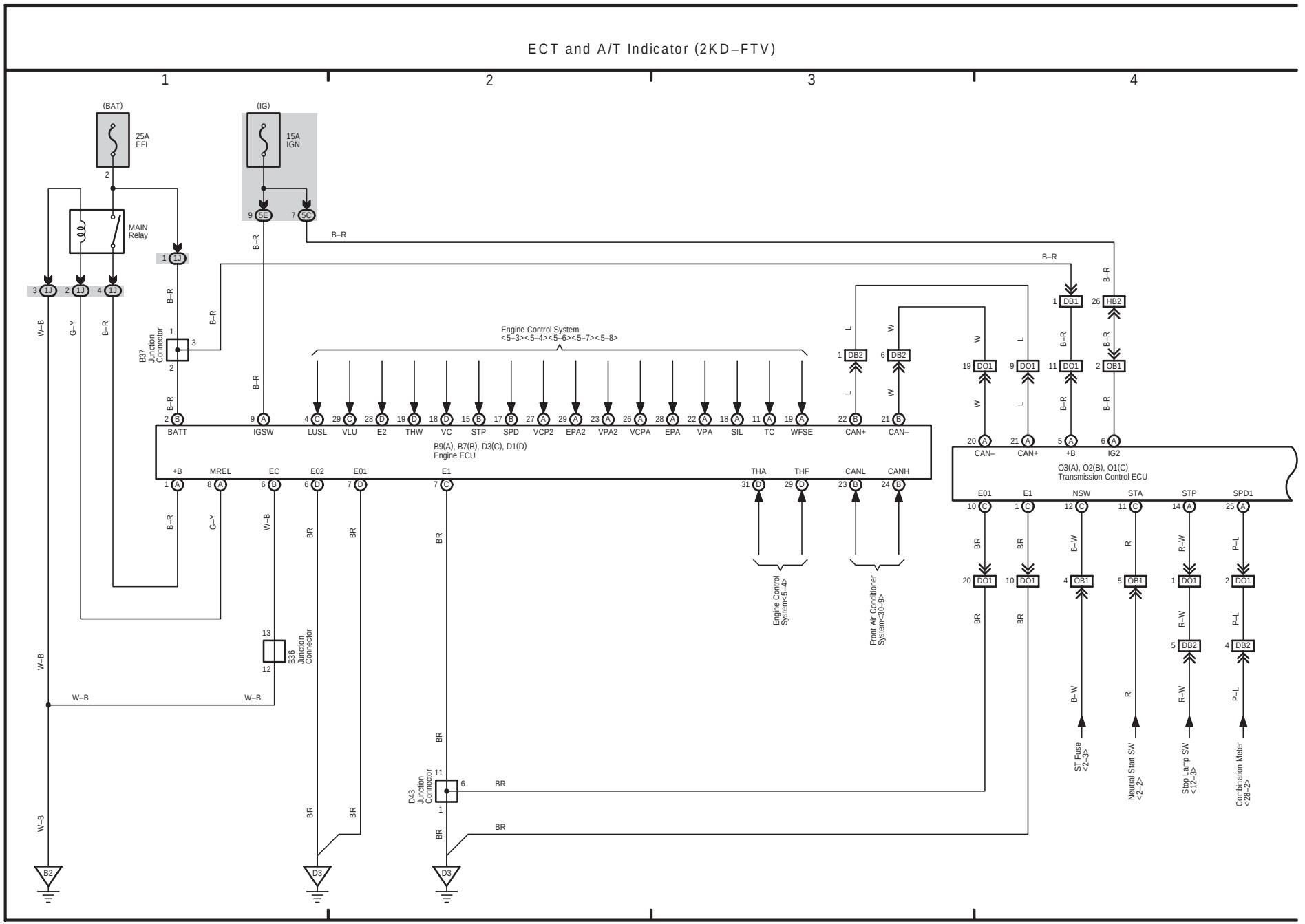

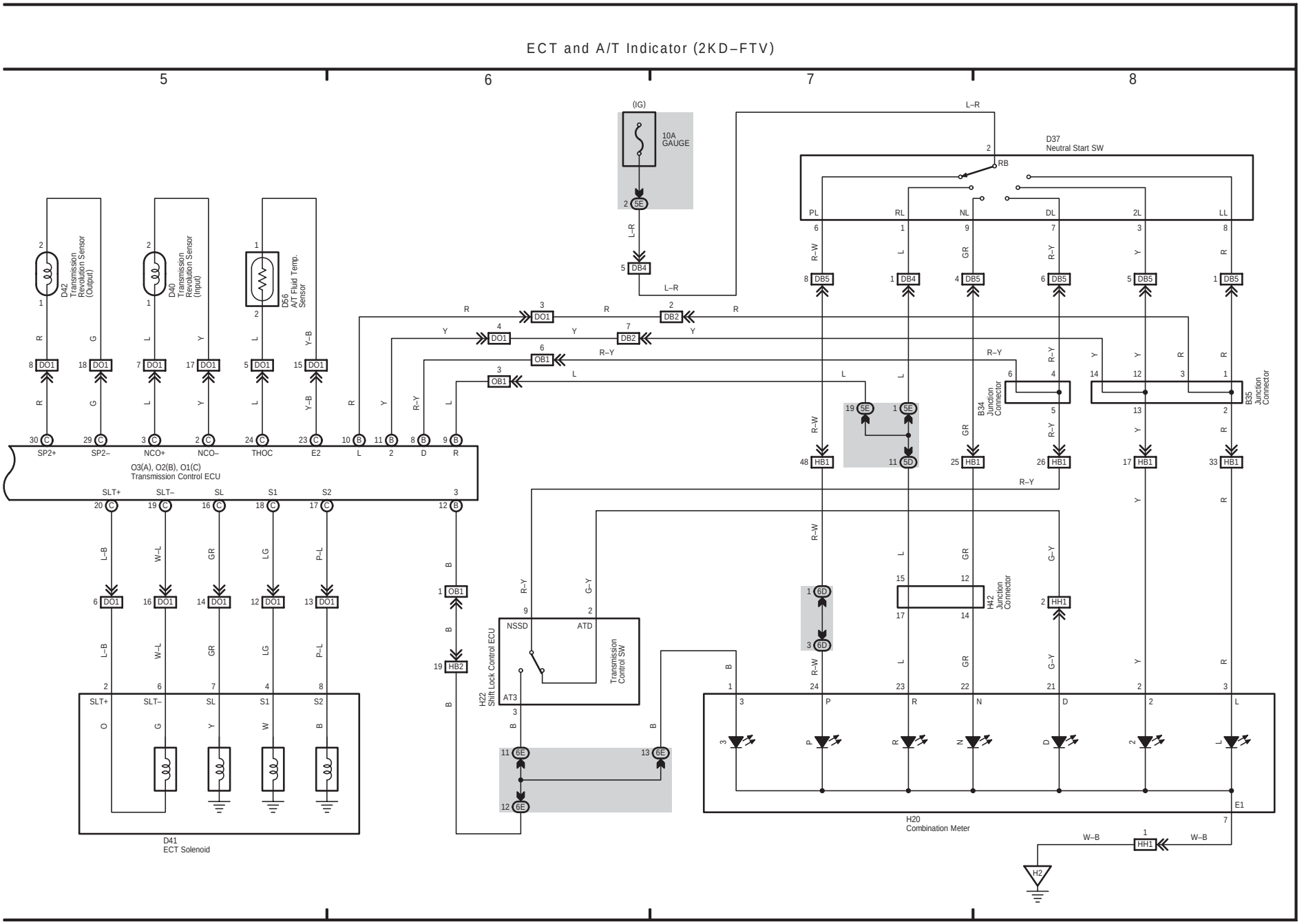
ECT and A/T Indicator (2KD–FTV)
5
6
7
8
(IG)
10A GAUGE
D37 Neutral Start SW
RB
PL
RL
NL
DL
2L
LL
D42 Transmission Revolution Sensor (Output)
D40 Transmission Revolution Sensor (Input)
D56 A/T Fluid Temp. Sensor
SP2+
SP2–
NCO+
NCO–
THOC
E2
L
2
D
R
O3(A), O2(B), O1(C) Transmission Control ECU
SLT+
SLT–
SL
S1
S2
B34 Junction Connector
B35 Junction Connector
H42 Junction Connector
NSSD
ATD
Transmission Control SW
H22 Shift Lock Control ECU
AT3
D41 ECT Solenoid
H20 Combination Meter
P
R
N
D
2
L
E1
W–B
H2

## 9 HIACE

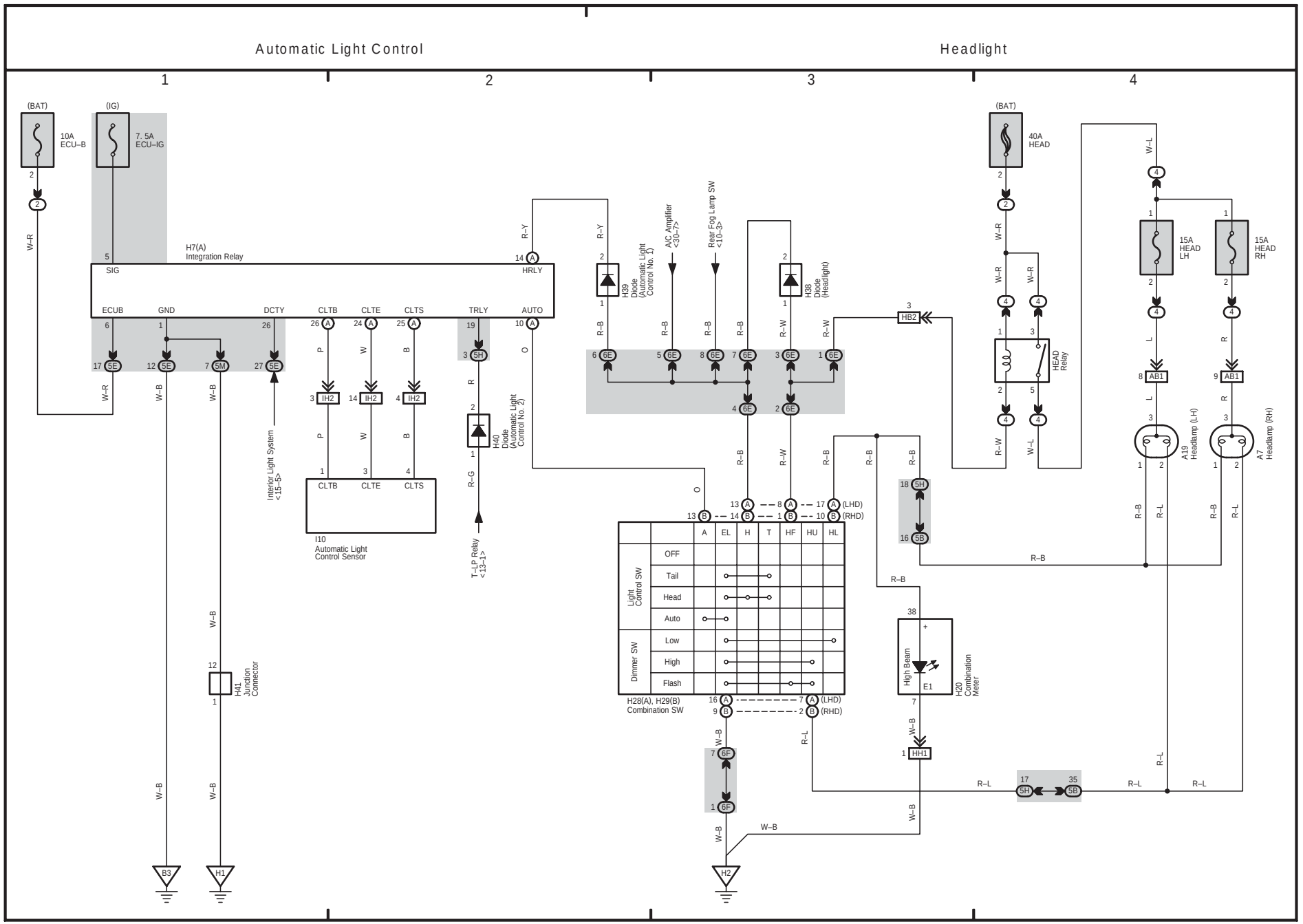
Automatic Light Control
Headlight
1
2
3
4
(BAT)
10A
ECU–B
(IG)
7. 5A
ECU–IG
H7(A)
Integration Relay
SIG
HRLY
ECUB
GND
DCTY
CLTB
CLTE
CLTS
TRLY
AUTO
Interior Light System
<15–5>
I10
Automatic Light
Control Sensor
H40
Diode
(Automatic Light
Control No. 2)
T–LP Relay
<13–1>
H39
Diode
(Automatic Light
Control No. 1)
A/C Amplifier
<30–7>
Rear Fog Lamp SW
<10–3>
H38
Diode
(Headlight)
HB2
40A
HEAD
HEAD
Relay
15A
HEAD
LH
15A
HEAD
RH
A19
Headlamp (LH)
A7
Headlamp (RH)
Light
Control SW
OFF
Tail
Head
Auto
Dimmer SW
Low
High
Flash
H28(A), H29(B)
Combination SW
High Beam
H20
Combination
Meter
H41
Junction
Connector
(LHD)
(RHD)
B3
H1
H2

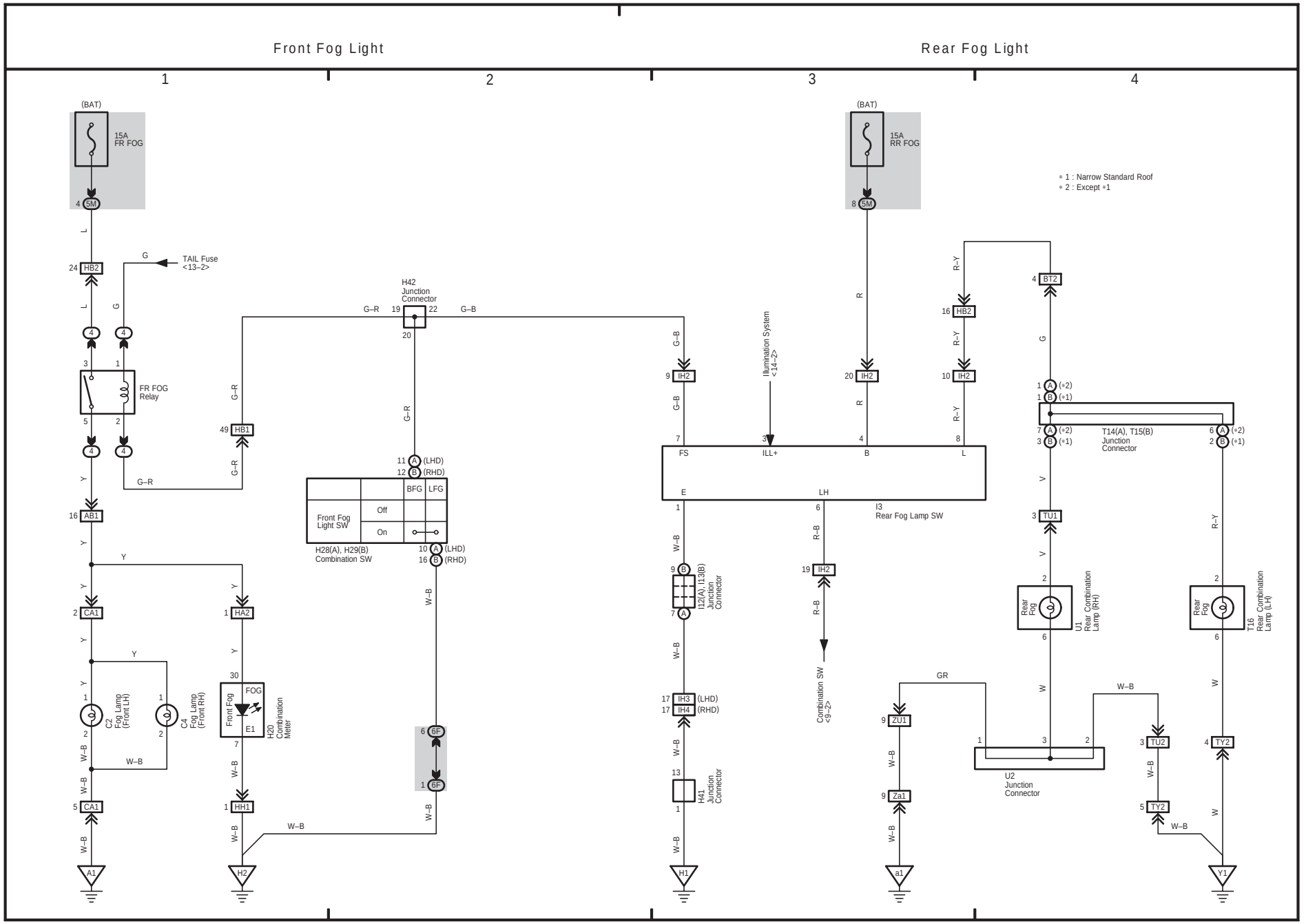
Front Fog Light
Rear Fog Light
1
2
3
4
(BAT)
15A
FR FOG
4 5M
L
24 HB2
G
TAIL Fuse
<13–2>
L
G
4
4
3
1
FR FOG
Relay
5
2
4
4
Y
16 AB1
Y
Y
2 CA1
Y
Y
1
1
C2
Fog Lamp
(Front LH)
C4
Fog Lamp
(Front RH)
2
2
W–B
W–B
W–B
5 CA1
W–B
A1
G–R
49 HB1
G–R
G–R
H42
Junction
Connector
G–R
19
22
G–B
20
11 A (LHD)
12 B (RHD)
BFG
LFG
Front Fog
Light SW
Off
On
H28(A), H29(B)
Combination SW
10 A (LHD)
16 B (RHD)
W–B
Y
1 HA2
Y
30
FOG
Front Fog
E1
7
H20
Combination
Meter
W–B
1 HH1
W–B
W–B
H2
6 6F
1 6F
W–B
(BAT)
15A
RR FOG
8 5M
R
9 IH2
G–B
G–B
7
FS
Illumination System
<14–2>
3
ILL+
20 IH2
R
4
B
16 HB2
R–Y
R–Y
10 IH2
R–Y
8
L
E
1
W–B
9 B
I12(A), I13(B)
Junction
Connector
7 A
W–B
17 IH3 (LHD)
17 IH4 (RHD)
W–B
13
H41
Junction
Connector
1
W–B
H1
LH
6
R–B
19 IH2
R–B
Combination SW
<9–2>
I3
Rear Fog Lamp SW
GR
9 ZU1
W–B
9 Za1
W–B
a1
4 BT2
G
1 A (*2)
1 B (*1)
7 A (*2)
3 B (*1)
T14(A), T15(B)
Junction
Connector
6 A (*2)
2 B (*1)
V
3 TU1
V
2
Rear
Fog
6
U1
Rear Combination
Lamp (RH)
W
W–B
1
3
2
U2
Junction
Connector
3 TU2
W–B
5 TY2
W–B
R–Y
2
Rear
Fog
6
T16
Rear Combination
Lamp (LH)
W
4 TY2
W
Y1
* 1 : Narrow Standard Roof
* 2 : Except *1

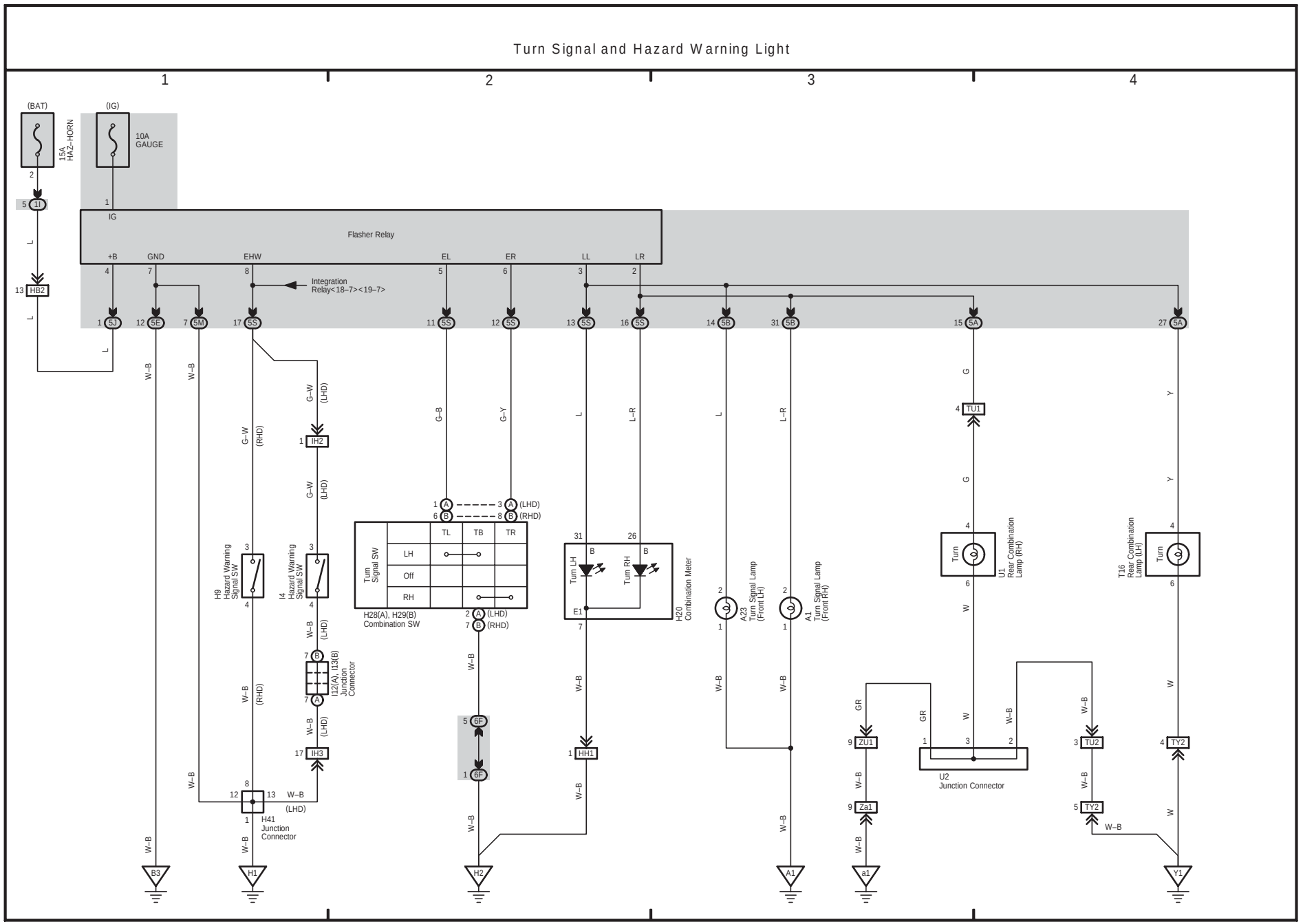
Turn Signal and Hazard Warning Light
1
2
3
4
(BAT)
(IG)
15A HAZ–HORN
10A GAUGE
Flasher Relay
IG
+B
GND
EHW
EL
ER
LL
LR
Integration Relay<18–7><19–7>
HB2
5J
5E
5M
5S
1I
H9 Hazard Warning Signal SW
I4 Hazard Warning Signal SW
IH2
IH3
I12(A), I13(B) Junction Connector
H41 Junction Connector
H28(A), H29(B) Combination SW
TL
TB
TR
LH
Off
RH
Turn Signal SW
H20 Combination Meter
Turn LH
Turn RH
HH1
A23 Turn Signal Lamp (Front LH)
A1 Turn Signal Lamp (Front RH)
5B
5A
TU1
U1 Rear Combination Lamp (RH)
T16 Rear Combination Lamp (LH)
Turn
ZU1
Za1
U2 Junction Connector
TU2
TY2
6F
B3
H1
H2
A1
a1
Y1
(RHD)
(LHD)
W–B
G–W
G–B
G–Y
L
L–R
GR
G
Y
W

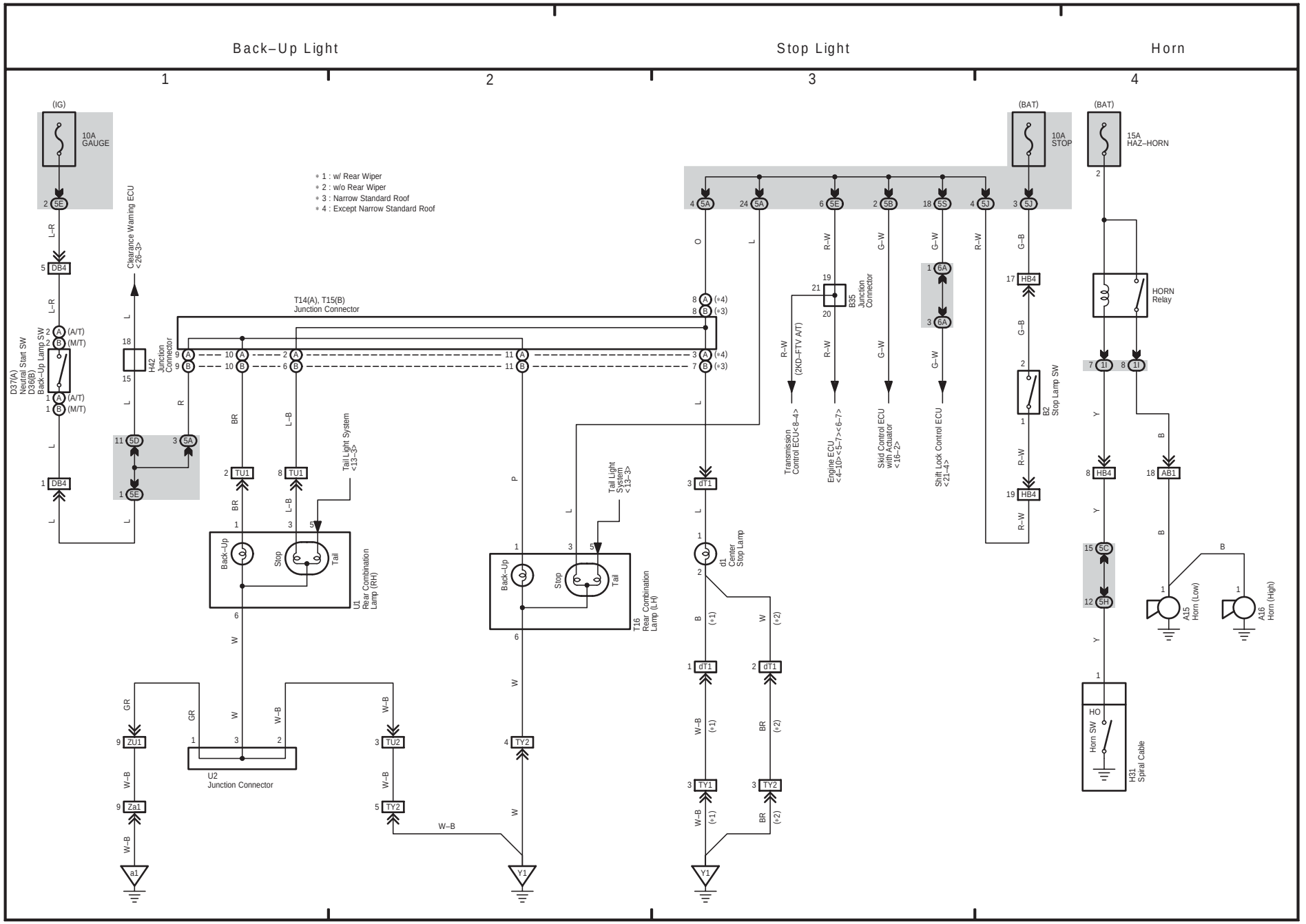
Back–Up Light
Stop Light
Horn
1
2
3
4
(IG)
10A GAUGE
(BAT)
10A STOP
(BAT)
15A HAZ–HORN
∗ 1 : w/ Rear Wiper
∗ 2 : w/o Rear Wiper
∗ 3 : Narrow Standard Roof
∗ 4 : Except Narrow Standard Roof
Clearance Warning ECU <28–3>
T14(A), T15(B) Junction Connector
D37(A) Neutral Start SW D36(B) Back–Up Lamp SW
H42 Junction Connector
Tail Light System <13–3>
U1 Rear Combination Lamp (RH)
T16 Rear Combination Lamp (LH)
U2 Junction Connector
d1 Center Stop Lamp
Transmission Control ECU <8–4>
(2KD–FTV A/T)
Engine ECU <4–10><5–7><6–7>
B35 Junction Connector
Skid Control ECU with Actuator <16–2>
Shift Lock Control ECU <21–4>
B2 Stop Lamp SW
HORN Relay
A15 Horn (Low)
A16 Horn (High)
Horn SW
H31 Spiral Cable
Back–Up
Stop
Tail

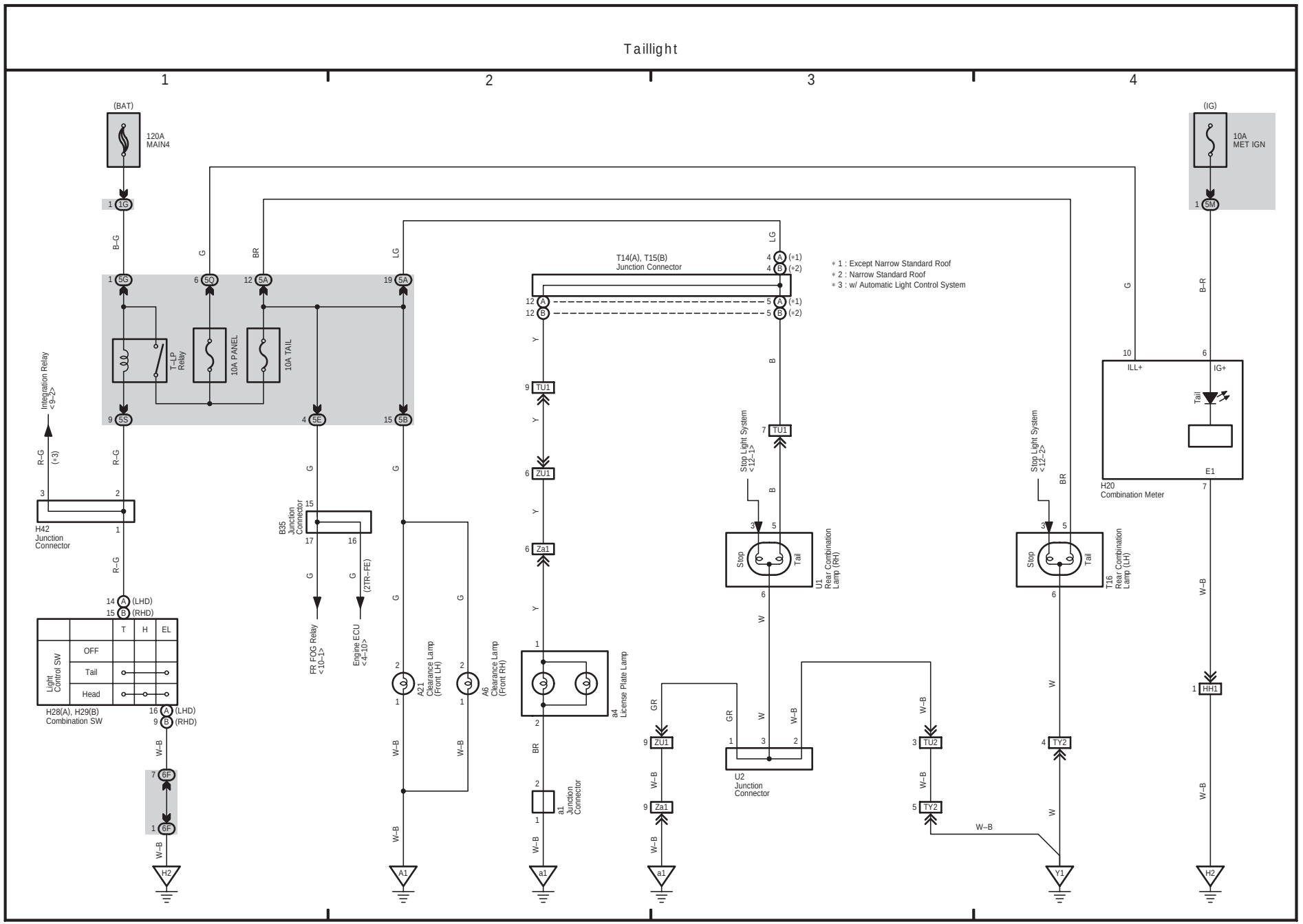
Taillight
1
2
3
4
(BAT)
120A
MAIN4
1G
B–G
5G
G
6Q
BR
12A
LG
19A
T–LP
Relay
10A PANEL
10A TAIL
Integration Relay
<3–2>
R–G
(*3)
5S
5E
15B
H42
Junction
Connector
B35
Junction
Connector
FR FOG Relay
<10–1>
Engine ECU
<4–10>
(2TR–FE)
14 A (LHD)
15 B (RHD)
Light
Control SW
T
H
EL
OFF
Tail
Head
H28(A), H29(B)
Combination SW
16 A (LHD)
9 B (RHD)
W–B
6P
H2
A21
Clearance Lamp
(Front LH)
A6
Clearance Lamp
(Front RH)
A1
T14(A), T15(B)
Junction Connector
4 A (*1)
4 B (*2)
12 A
12 B
5 A (*1)
5 B (*2)
Y
B
TU1
ZU1
Za1
a4
License Plate Lamp
BR
a1
Junction
Connector
GR
U2
Junction
Connector
Stop Light System
<12–1>
Stop
Tail
U1
Rear Combination
Lamp (RH)
W
Stop Light System
<12–2>
T16
Rear Combination
Lamp (LH)
TU2
TY2
W–B
Y1
(IG)
10A
MET IGN
5M
HH1
ILL+
IG+
E1
H20
Combination Meter
Tail
* 1 : Except Narrow Standard Roof
* 2 : Narrow Standard Roof
* 3 : w/ Automatic Light Control System

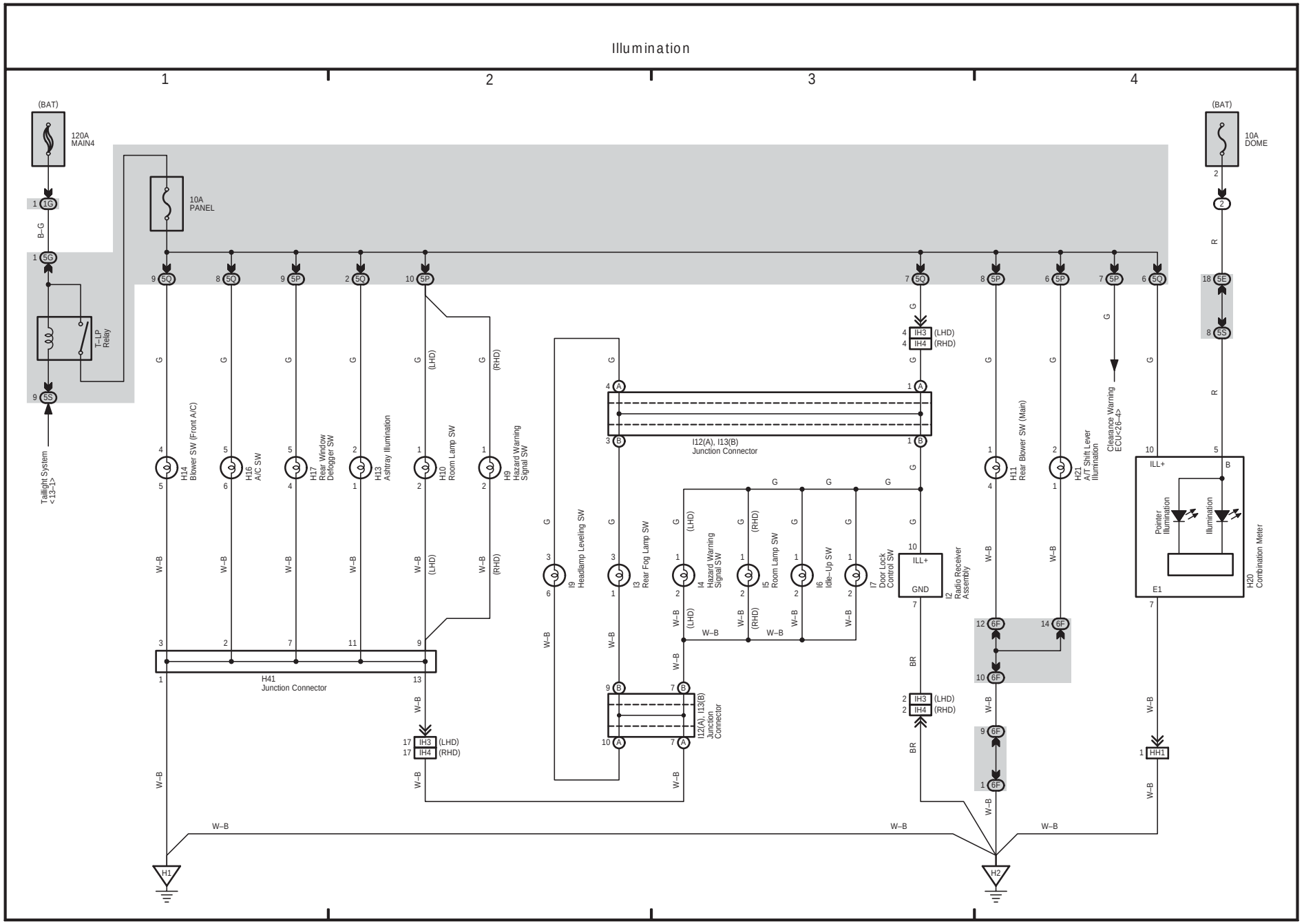
Illumination
1
2
3
4
(BAT)
120A MAIN4
10A PANEL
T–LP Relay
Taillight System <13–>
H14 Blower SW (Front A/C)
H16 A/C SW
H17 Rear Window Defogger SW
H13 Ashtray Illumination
H10 Room Lamp SW
H9 Hazard Warning Signal SW
H41 Junction Connector
I9 Headlamp Leveling SW
I3 Rear Fog Lamp SW
I4 Hazard Warning Signal SW
I5 Room Lamp SW
I6 Idle–Up SW
I7 Door Lock Control SW
I12(A), I13(B) Junction Connector
I2 Radio Receiver Assembly
H11 Rear Blower SW (Main)
H21 A/T Shift Lever Illumination
Clearance Warning ECU<26–4>
(BAT)
10A DOME
Pointer Illumination
Illumination
H20 Combination Meter
(LHD)
(RHD)
W–B
G
R
BR
H1
H2

(Cont. next page)

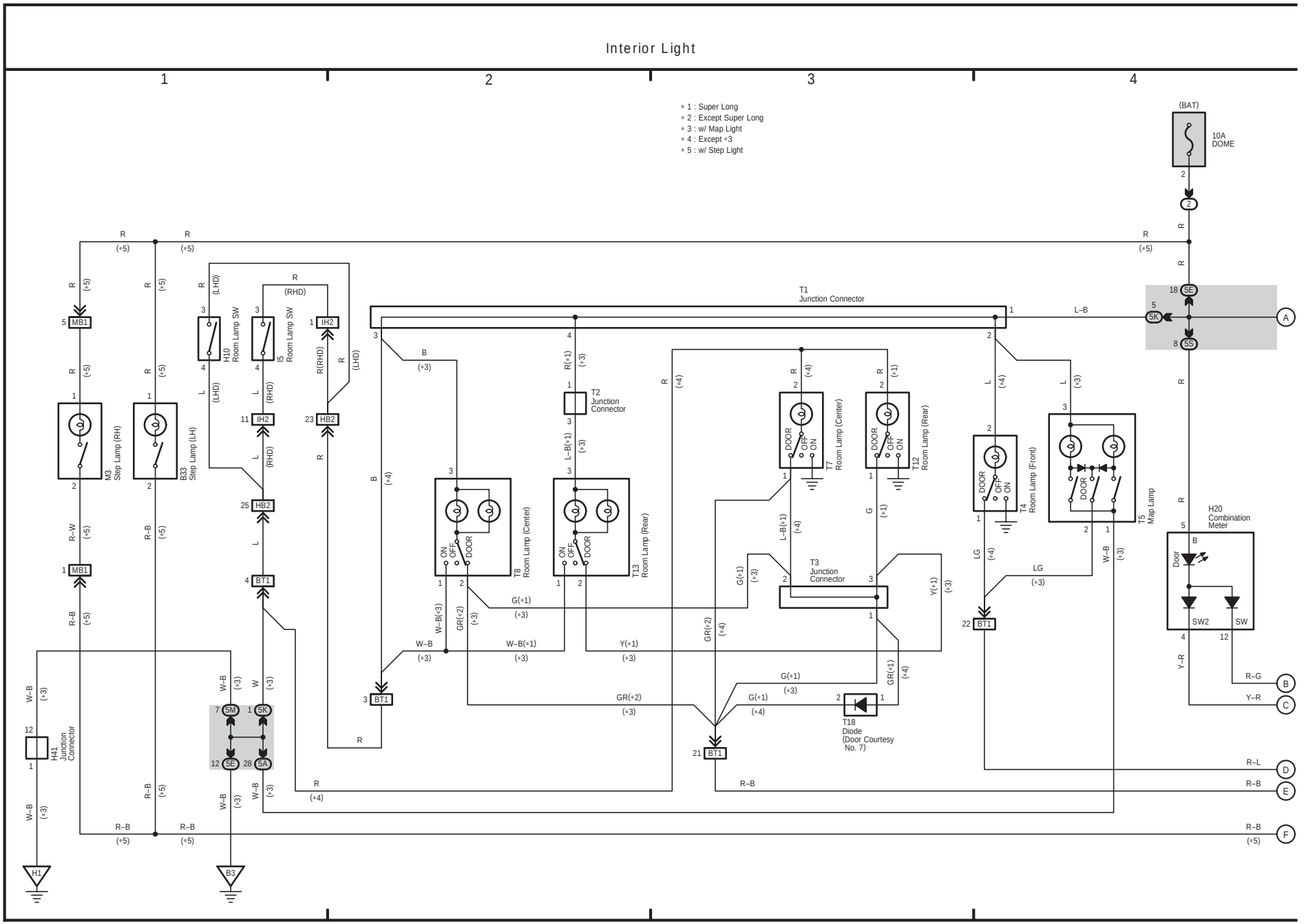

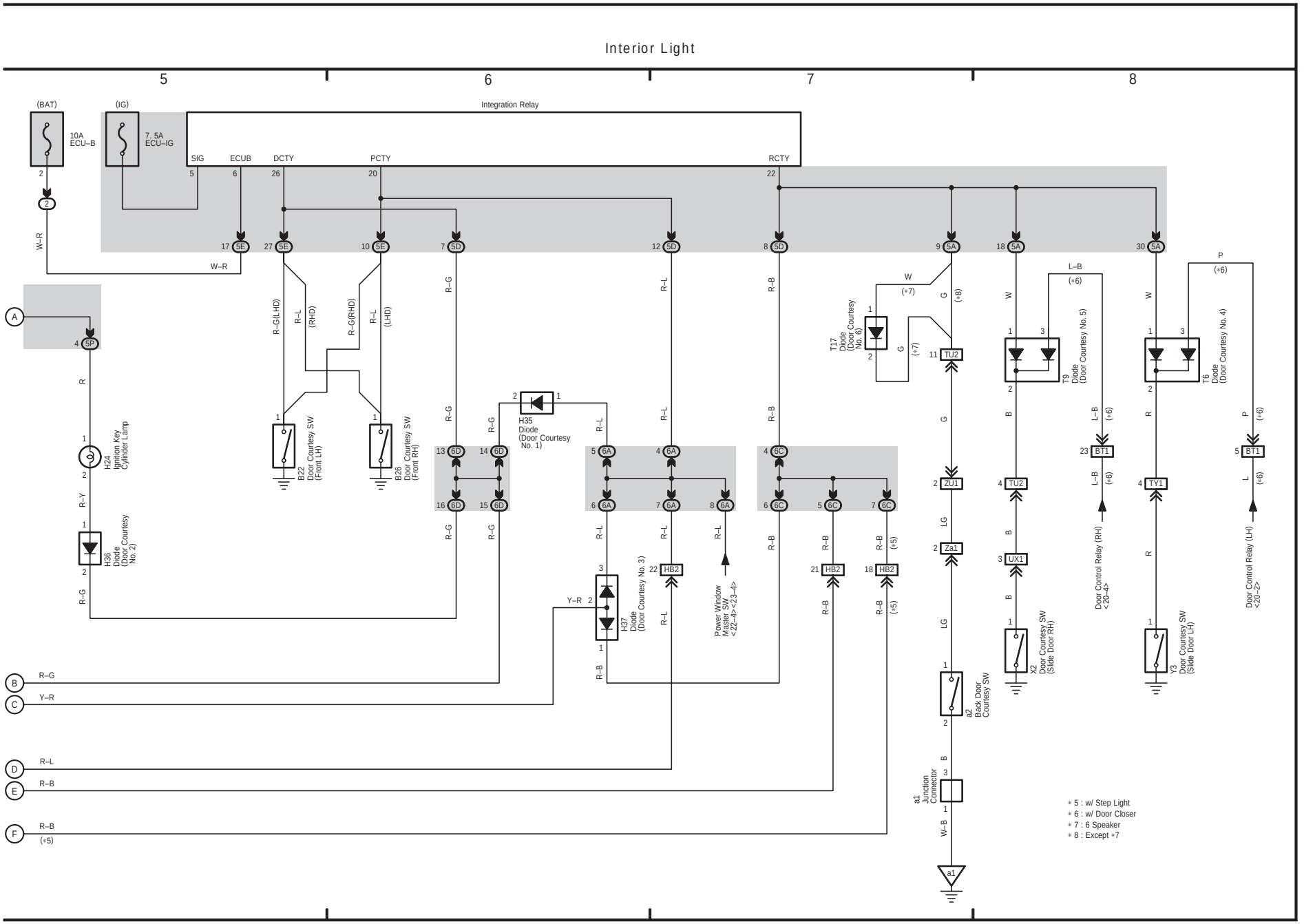
Interior Light
5
6
7
8
(BAT)
(IG)
10A
ECU–B
7. 5A
ECU–IG
Integration Relay
SIG
ECUB
DCTY
PCTY
RCTY
W–R
R–G(LHD)
R–L
(RHD)
R–G(RHD)
R–L
(LHD)
R–G
R–L
R–B
W
(*7)
G
(*8)
L–B
(*6)
P
(*6)
T17
Diode
(Door Courtesy
No. 6)
T9
Diode
(Door Courtesy No. 5)
T6
Diode
(Door Courtesy No. 4)
H24
Ignition Key
Cylinder Lamp
R–Y
H36
Diode
(Door Courtesy
No. 2)
B22
Door Courtesy SW
(Front LH)
B26
Door Courtesy SW
(Front RH)
H35
Diode
(Door Courtesy
No. 1)
H37
Diode
(Door Courtesy No. 3)
Y–R
Power Window
Master SW
<22–4><23–4>
(*5)
Door Control Relay (RH)
<20–4>
Door Control Relay (LH)
<20–2>
a2
Back Door
Courtesy SW
X2
Door Courtesy SW
(Slide Door RH)
Y3
Door Courtesy SW
(Slide Door LH)
a1
Junction
Connector
W–B
* 5 : w/ Step Light
* 6 : w/ Door Closer
* 7 : 6 Speaker
* 8 : Except *7

## 16 HIACE

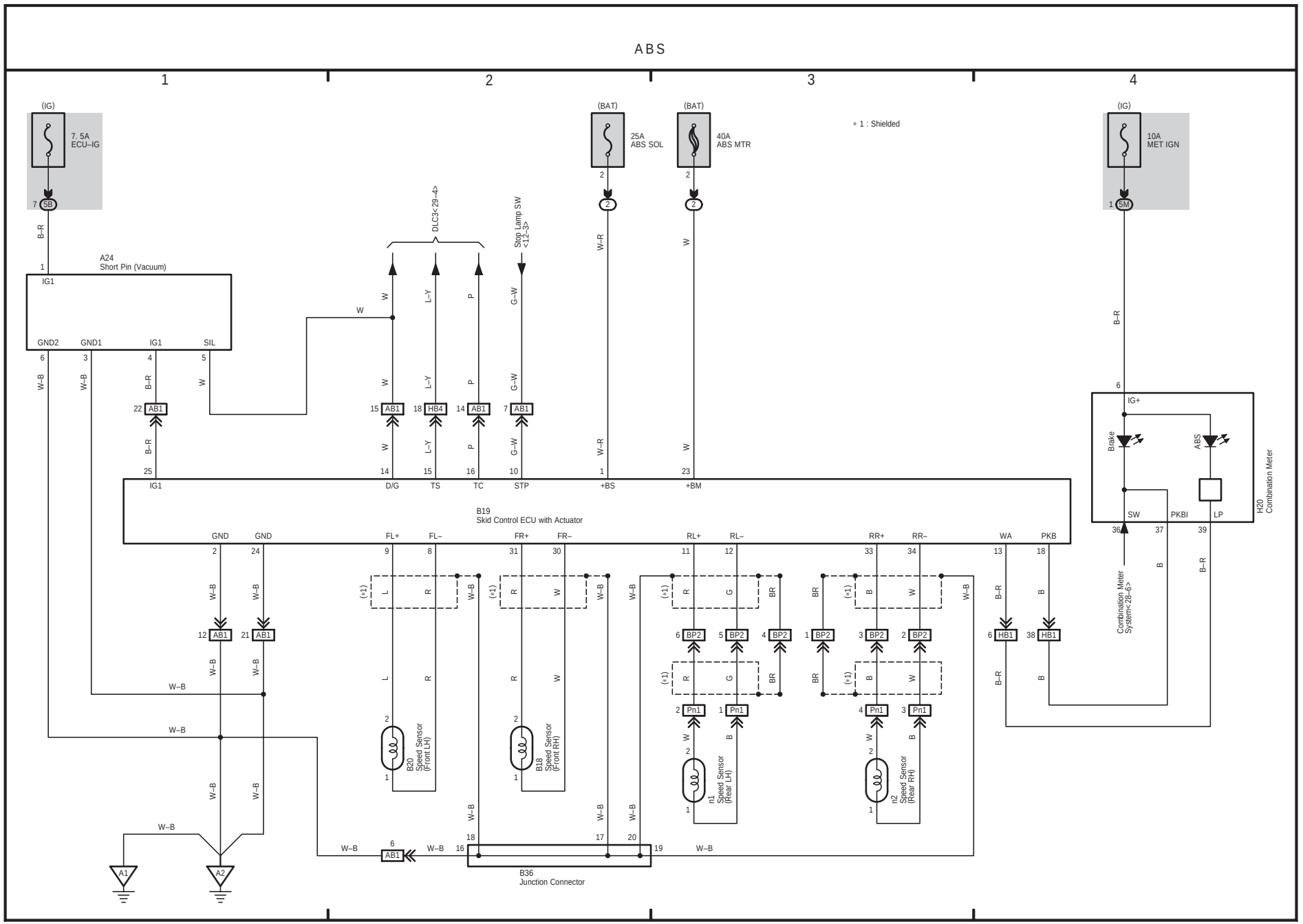
ABS
1
2
3
4
(IG)
7. 5A
ECU–IG
(BAT)
25A
ABS SOL
(BAT)
40A
ABS MTR
* 1 : Shielded
(IG)
10A
MET IGN
A24
Short Pin (Vacuum)
IG1
GND2
GND1
IG1
SIL
DLC3<29–4>
Stop Lamp SW
<12–3>
IG1
D/G
TS
TC
STP
+BS
+BM
B19
Skid Control ECU with Actuator
GND
GND
FL+
FL–
FR+
FR–
RL+
RL–
RR+
RR–
WA
PKB
B20
Speed Sensor
(Front LH)
B18
Speed Sensor
(Front RH)
n1
Speed Sensor
(Rear LH)
n2
Speed Sensor
(Rear RH)
B36
Junction Connector
IG+
Brake
ABS
SW
PKBI
LP
H20
Combination Meter
Combination Meter
System<28–6>
A1
A2

## 17 HIACE

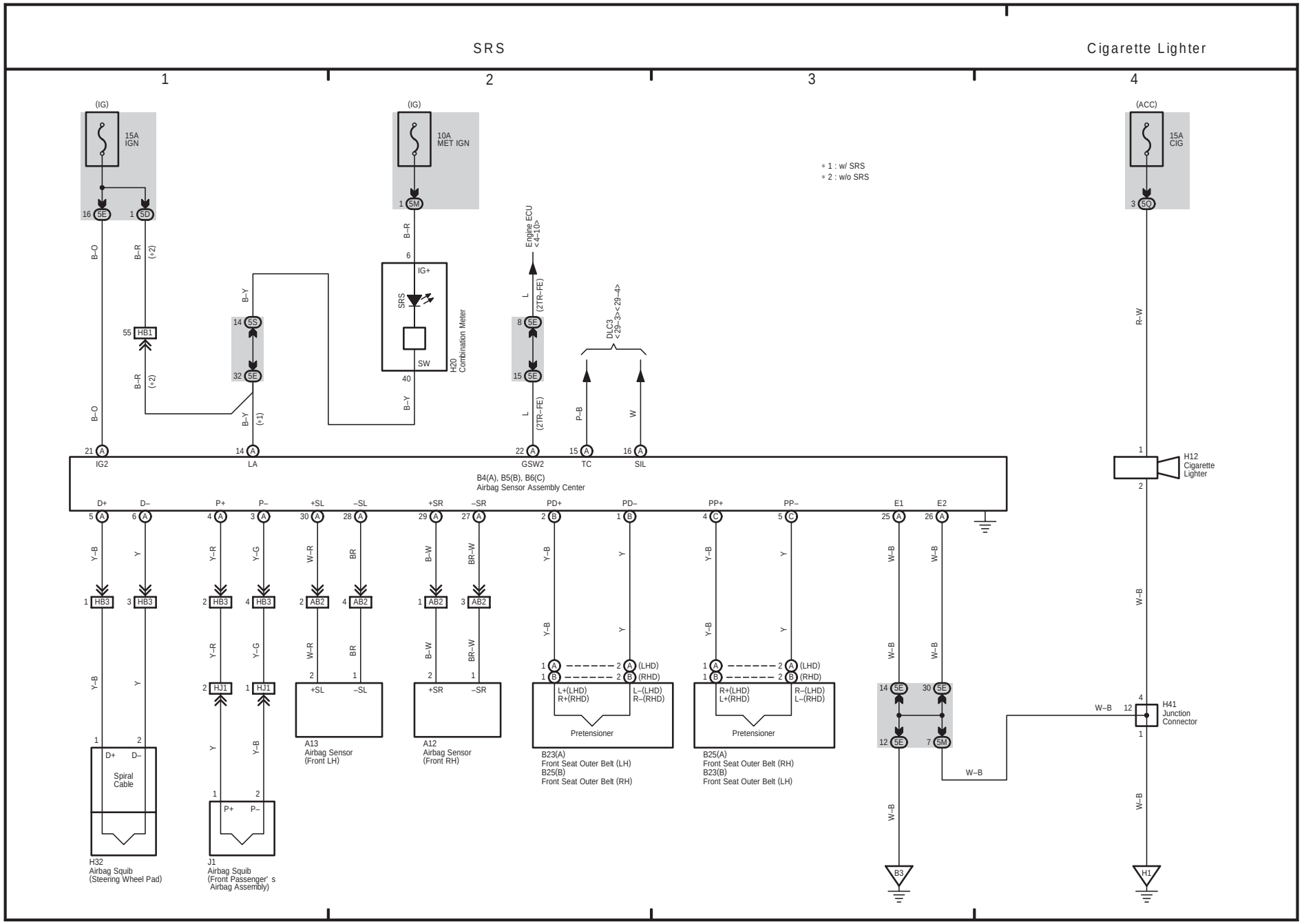
SRS
Cigarette Lighter
1
2
3
4
(IG)
15A
IGN
(IG)
10A
MET IGN
(ACC)
15A
CIG
* 1 : w/ SRS
* 2 : w/o SRS
Engine ECU
<4-10>
DLC3
<29-3><29-4>
H20
Combination Meter
IG+
SRS
SW
IG2
LA
GSW2
TC
SIL
B4(A), B5(B), B6(C)
Airbag Sensor Assembly Center
D+
D–
P+
P–
+SL
–SL
+SR
–SR
PD+
PD–
PP+
PP–
E1
E2
H12
Cigarette
Lighter
H41
Junction
Connector
Spiral
Cable
H32
Airbag Squib
(Steering Wheel Pad)
J1
Airbag Squib
(Front Passenger' s
Airbag Assembly)
A13
Airbag Sensor
(Front LH)
A12
Airbag Sensor
(Front RH)
Pretensioner
B23(A)
Front Seat Outer Belt (LH)
B25(B)
Front Seat Outer Belt (RH)
B25(A)
Front Seat Outer Belt (RH)
B23(B)
Front Seat Outer Belt (LH)
B3
H1

18 HIACE

(Cont. next page)

## Door Lock Control (LHD)

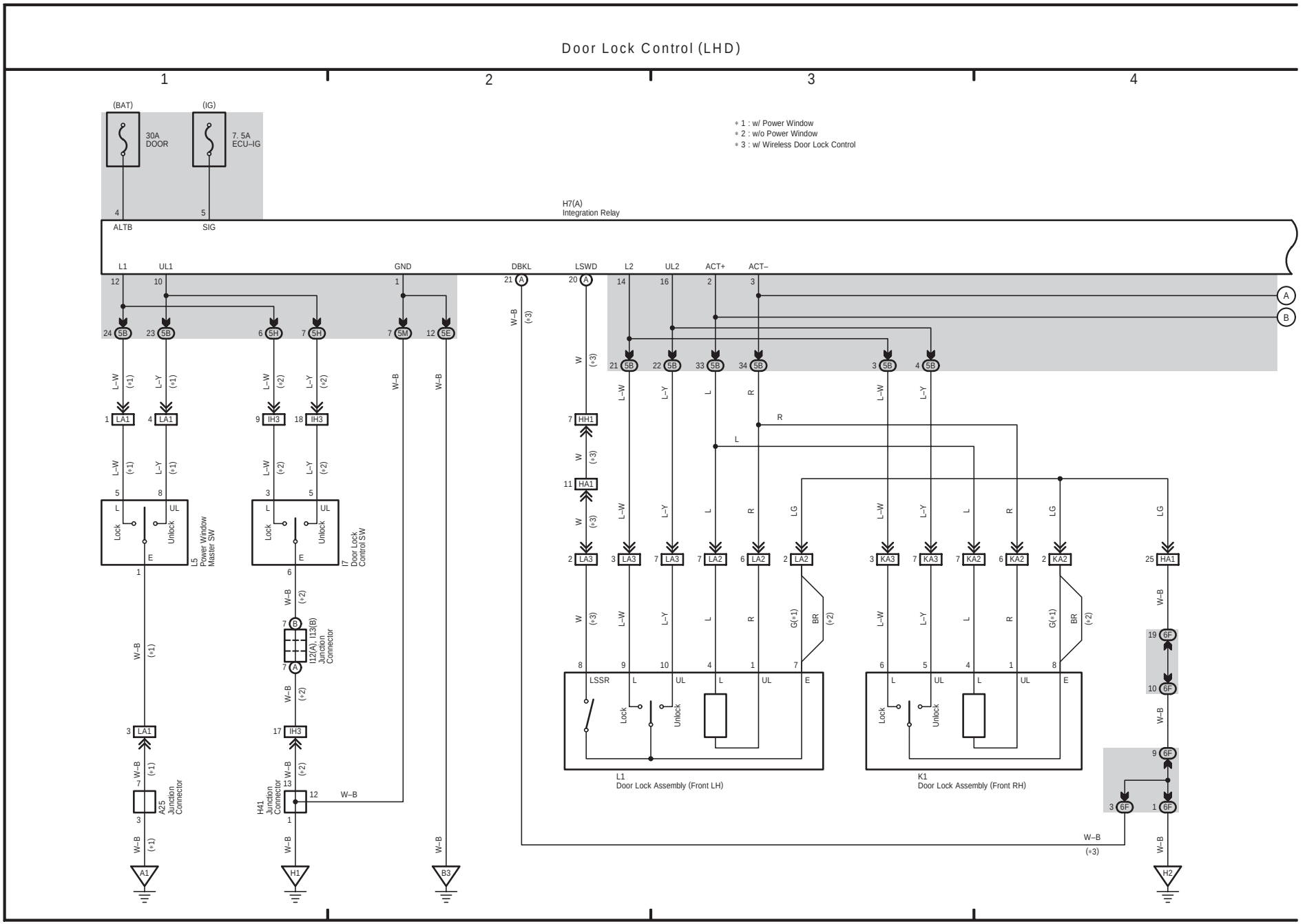

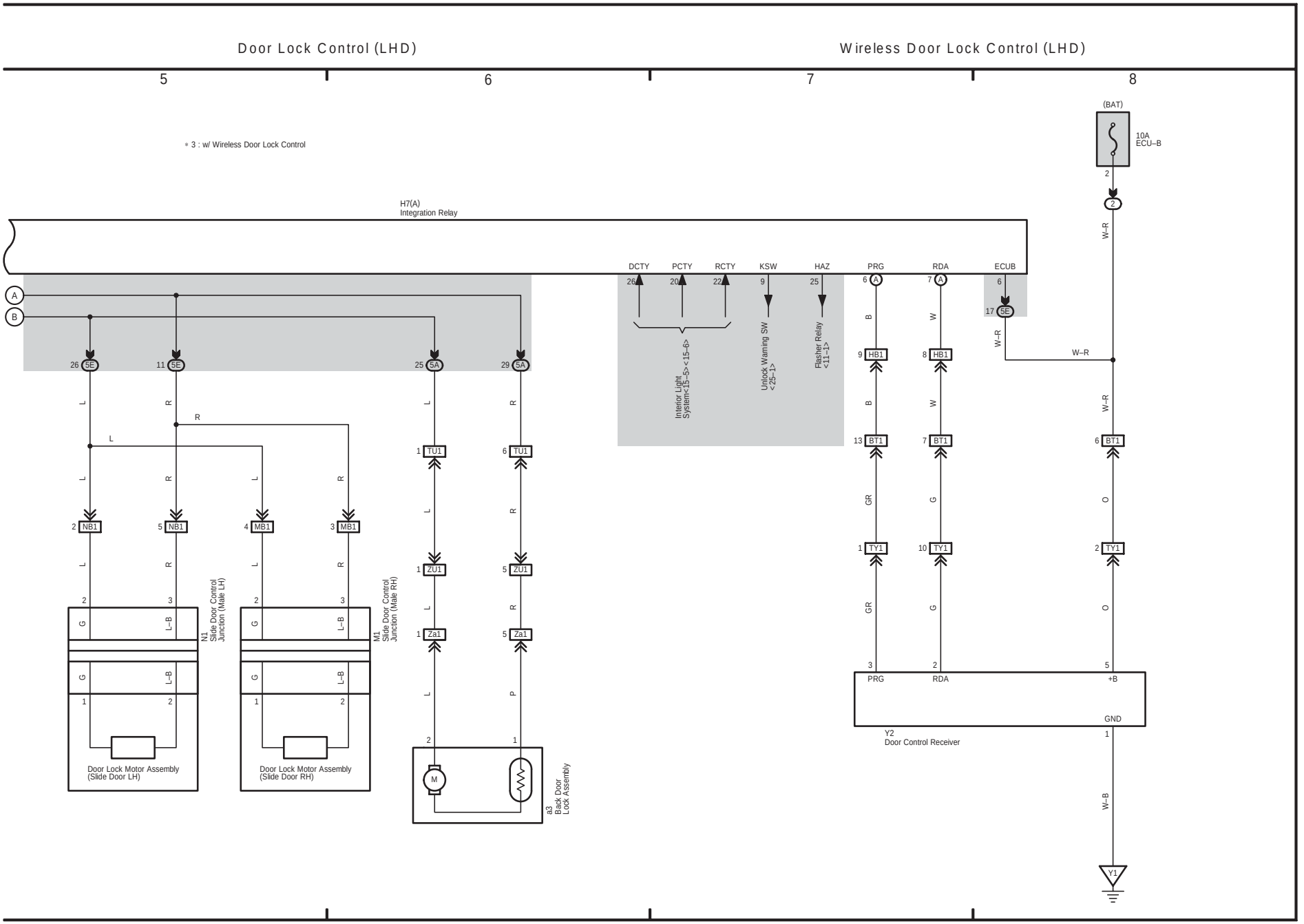
Door Lock Control (LHD)
Wireless Door Lock Control (LHD)
5
6
7
8
* 3 : w/ Wireless Door Lock Control
H7(A)
Integration Relay
(BAT)
10A
ECU–B
DCTY
PCTY
RCTY
KSW
HAZ
PRG
RDA
ECUB
Interior Light System<15–5><15–6>
Unlock Warning SW <25–1>
Flasher Relay <11–1>
N1
Slide Door Control Junction (Male LH)
M1
Slide Door Control Junction (Male RH)
Door Lock Motor Assembly (Slide Door LH)
Door Lock Motor Assembly (Slide Door RH)
a3
Back Door Lock Assembly
Y2
Door Control Receiver
PRG
RDA
+B
GND
Y1

Door Lock Control (RHD)

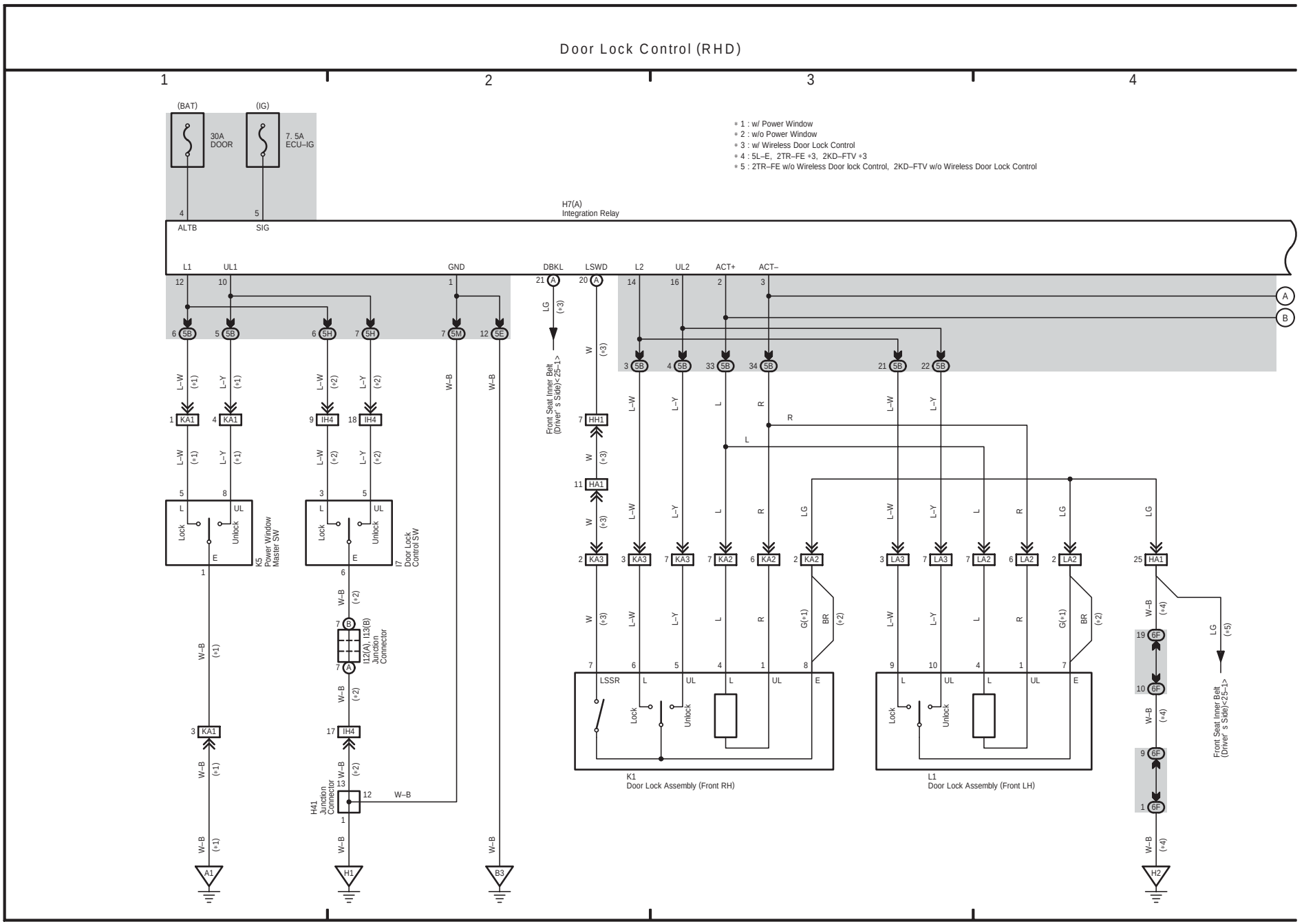

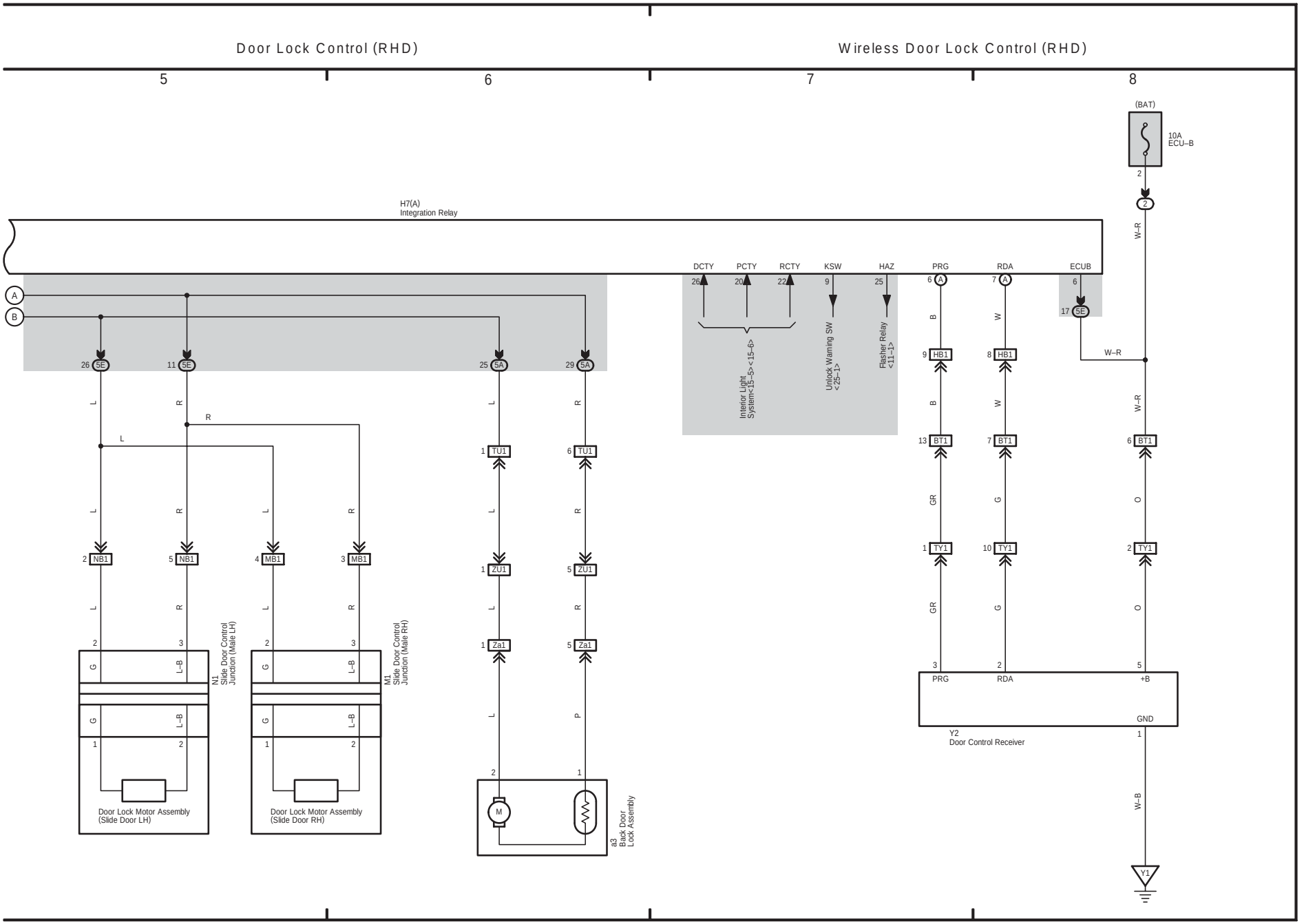
Door Lock Control (RHD)
Wireless Door Lock Control (RHD)
5
6
7
8
(BAT)
10A
ECU–B
H7(A)
Integration Relay
DCTY
PCTY
RCTY
KSW
HAZ
PRG
RDA
ECUB
Interior Light System<15–5><15–6>
Unlock Warning SW <25–1>
Flasher Relay <11–1>
N1
Slide Door Control Junction (Male LH)
M1
Slide Door Control Junction (Male RH)
Door Lock Motor Assembly (Slide Door LH)
Door Lock Motor Assembly (Slide Door RH)
a3
Back Door Lock Assembly
Y2
Door Control Receiver
+B
GND
Y1

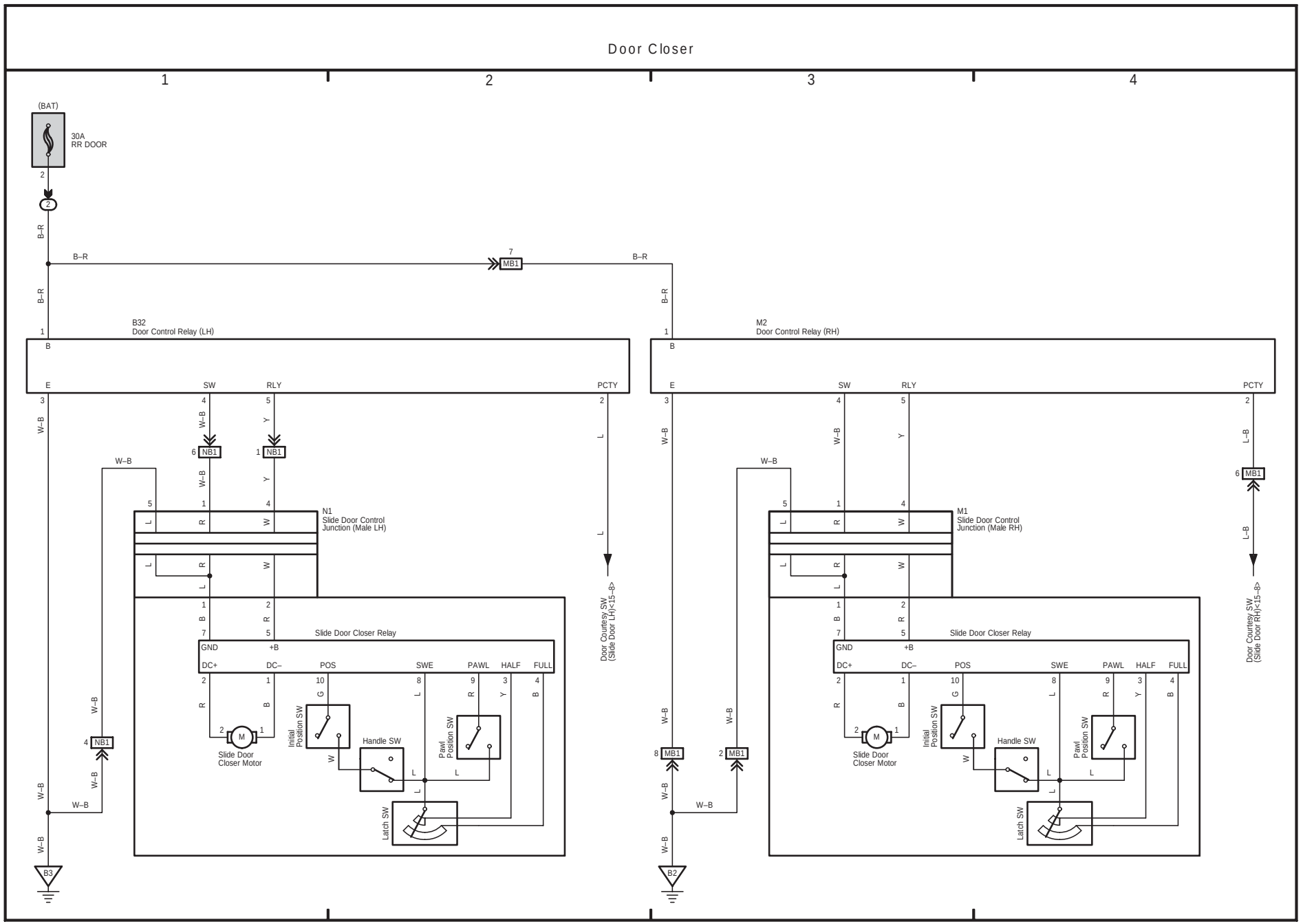
Door Closer
1
2
3
4
(BAT)
30A
RR DOOR
B–R
MB1
B32
Door Control Relay (LH)
M2
Door Control Relay (RH)
E
SW
RLY
PCTY
W–B
Y
L–B
NB1
N1
Slide Door Control
Junction (Male LH)
M1
Slide Door Control
Junction (Male RH)
Slide Door Closer Relay
GND
+B
DC+
DC–
POS
SWE
PAWL
HALF
FULL
Slide Door
Closer Motor
Initial
Position SW
Handle SW
Pawl
Position SW
Latch SW
Door Courtesy SW
(Slide Door LH)
Door Courtesy SW
(Slide Door RH)
B3
B2

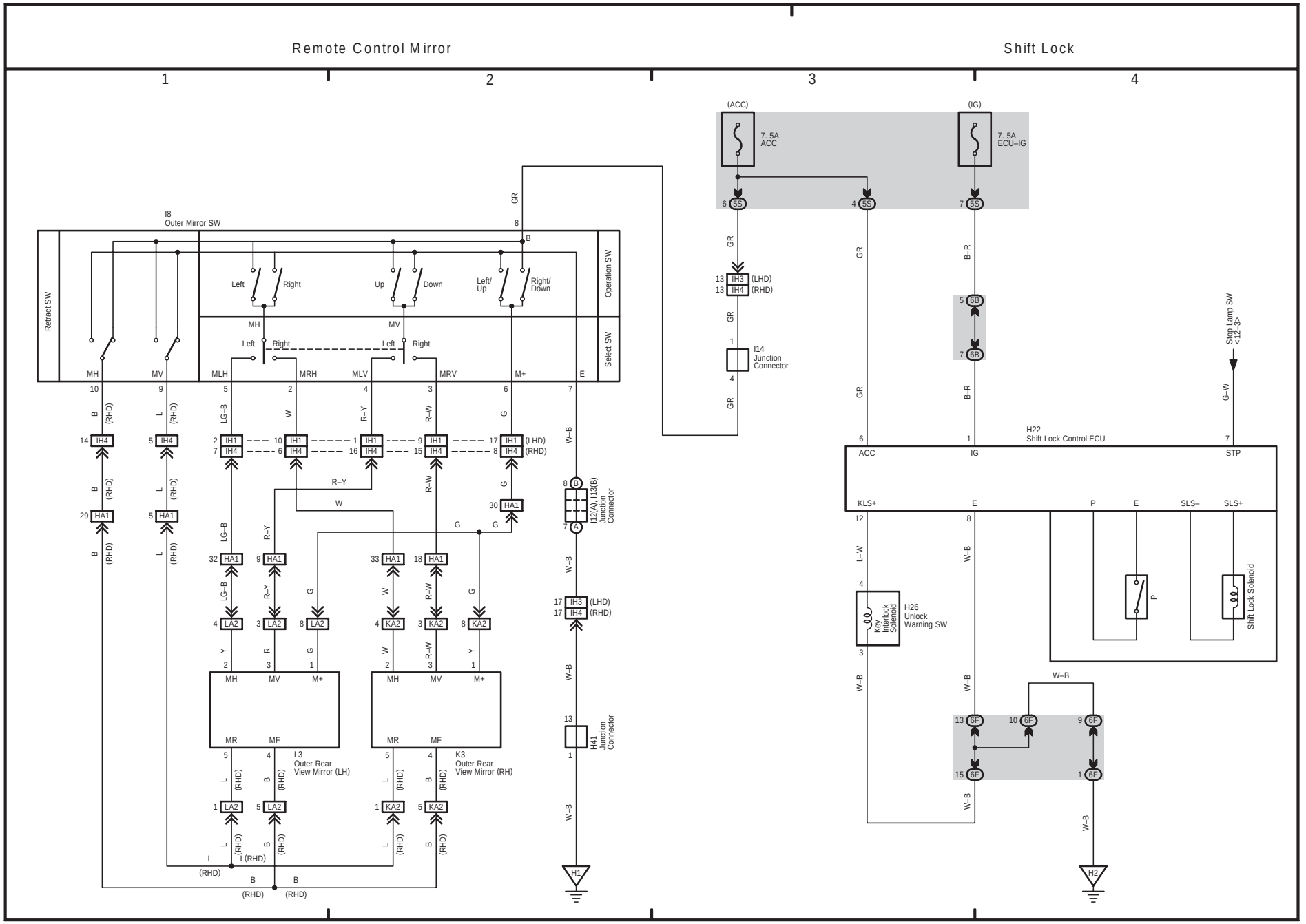
Remote Control Mirror
Shift Lock
1
2
3
4
I8
Outer Mirror SW
Retract SW
Operation SW
Select SW
Left
Right
Up
Down
Left/
Up
Right/
Down
MH
MV
MLH
MRH
MLV
MRV
M+
E
(ACC)
(IG)
7. 5A
ACC
7. 5A
ECU–IG
I14
Junction
Connector
(LHD)
(RHD)
I12(A), I13(B)
Junction
Connector
H41
Junction
Connector
L3
Outer Rear
View Mirror (LH)
K3
Outer Rear
View Mirror (RH)
H22
Shift Lock Control ECU
ACC
IG
STP
KLS+
E
P
E
SLS–
SLS+
H26
Unlock
Warning SW
Key
Interlock
Solenoid
Shift Lock Solenoid
Stop Lamp SW
H1
H2

## 22 HIACE

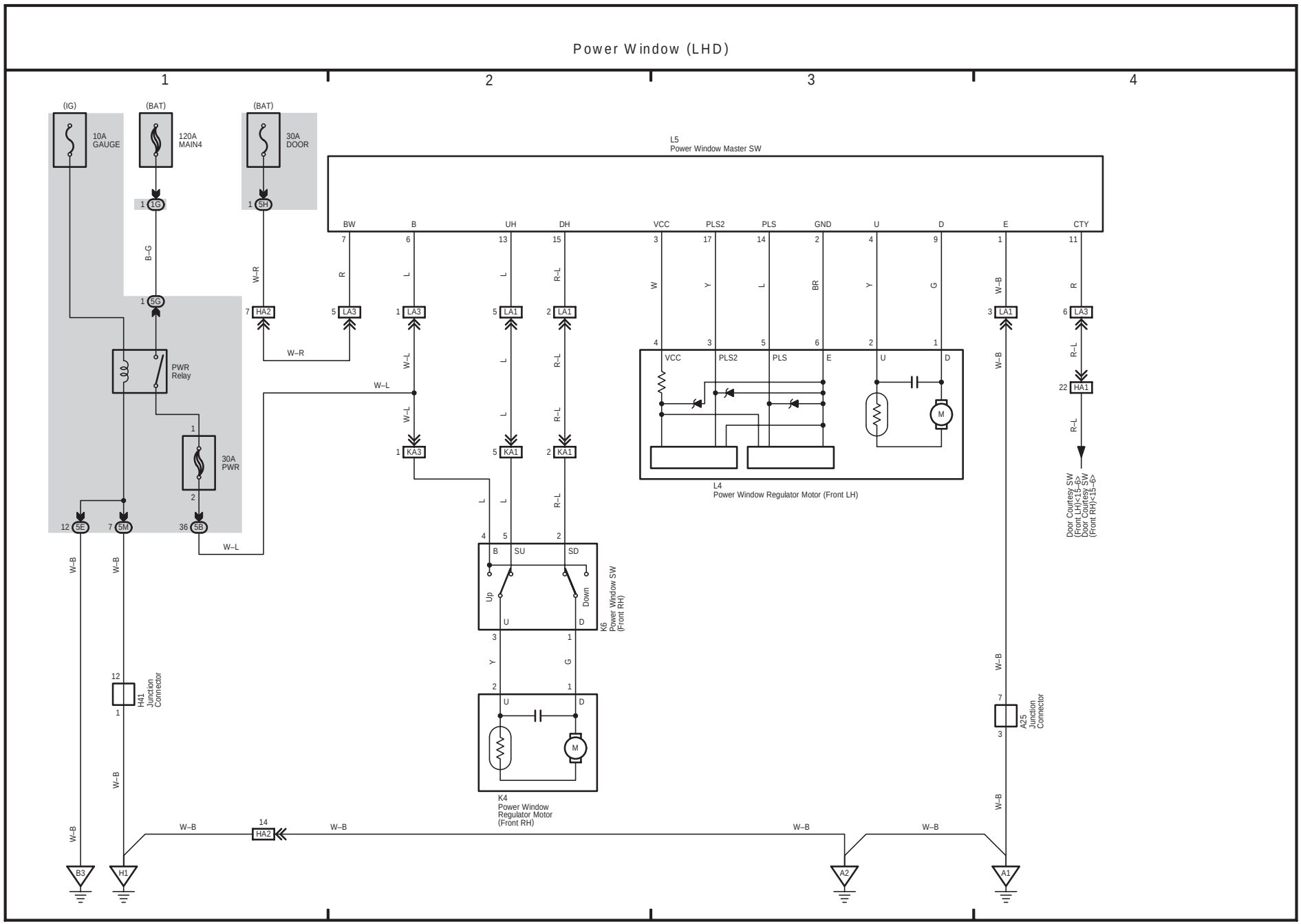
Power Window (LHD)
1
2
3
4
(IG)
10A GAUGE
(BAT)
120A MAIN4
(BAT)
30A DOOR
L5
Power Window Master SW
BW
B
UH
DH
VCC
PLS2
PLS
GND
U
D
E
CTY
PWR Relay
30A PWR
HA2
LA3
LA1
KA3
KA1
HA1
L4
Power Window Regulator Motor (Front LH)
Door Courtesy SW (Front LH)<15–6>
Door Courtesy SW (Front RH)<15–6>
K6
Power Window SW (Front RH)
K4
Power Window Regulator Motor (Front RH)
H41
Junction Connector
A25
Junction Connector
B3
H1
A2
A1

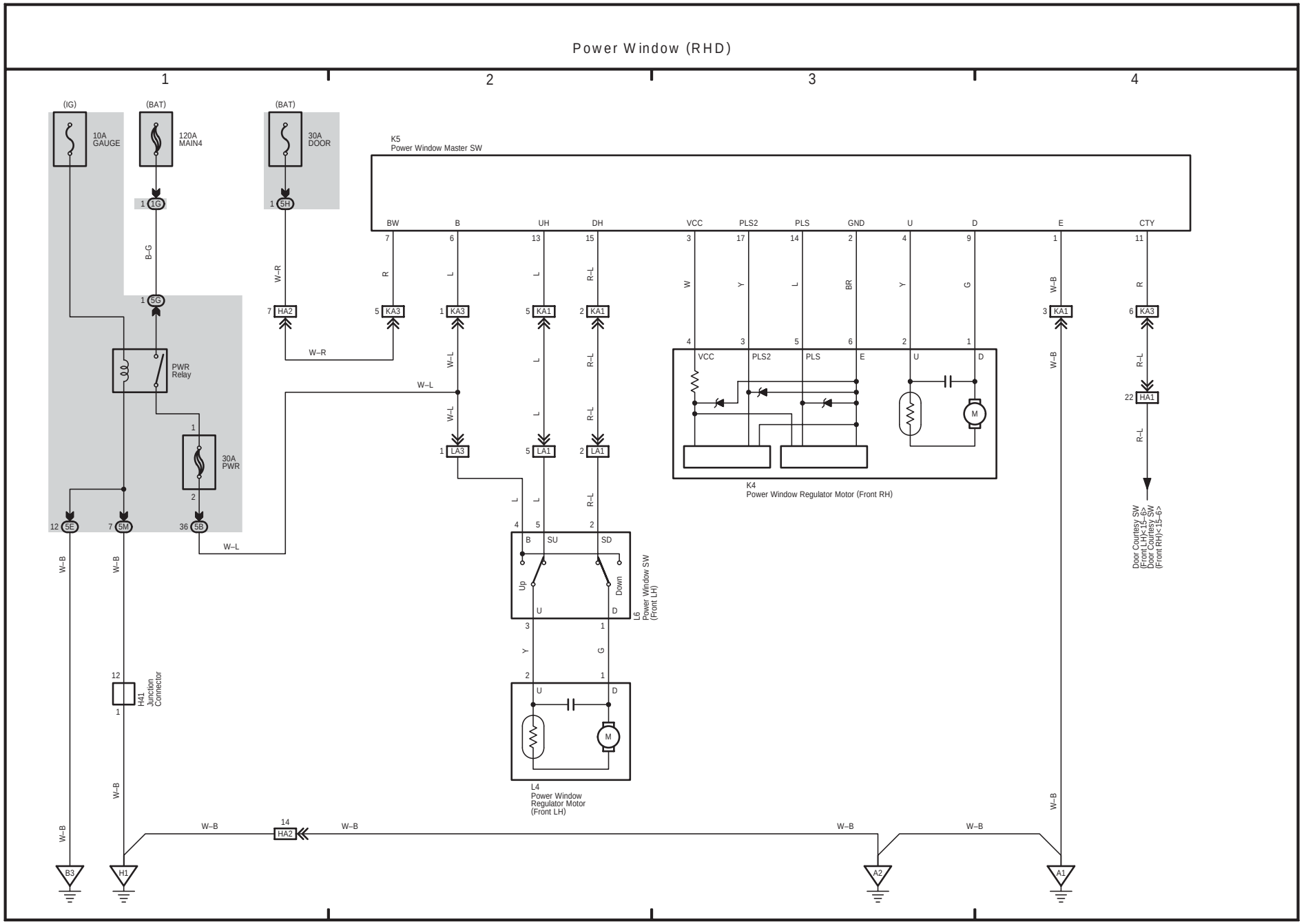
Power Window (RHD)
1
2
3
4
(IG)
(BAT)
(BAT)
10A GAUGE
120A MAIN4
30A DOOR
1 1G
1 5H
B–G
W–R
1 5G
PWR Relay
30A PWR
12 5E
7 5M
36 5B
W–B
W–L
K5
Power Window Master SW
BW
B
UH
DH
VCC
PLS2
PLS
GND
U
D
E
CTY
7 HA2
5 KA3
1 KA3
5 KA1
2 KA1
3 KA1
6 KA3
22 HA1
1 LA3
5 LA1
2 LA1
K4
Power Window Regulator Motor (Front RH)
B
SU
SD
Up
Down
U
D
L6
Power Window SW (Front LH)
L4
Power Window Regulator Motor (Front LH)
12
H41
Junction Connector
14 HA2
B3
H1
A2
A1
Door Courtesy SW (Front LH) <7–5>
Door Courtesy SW (Front RH) <15–6>

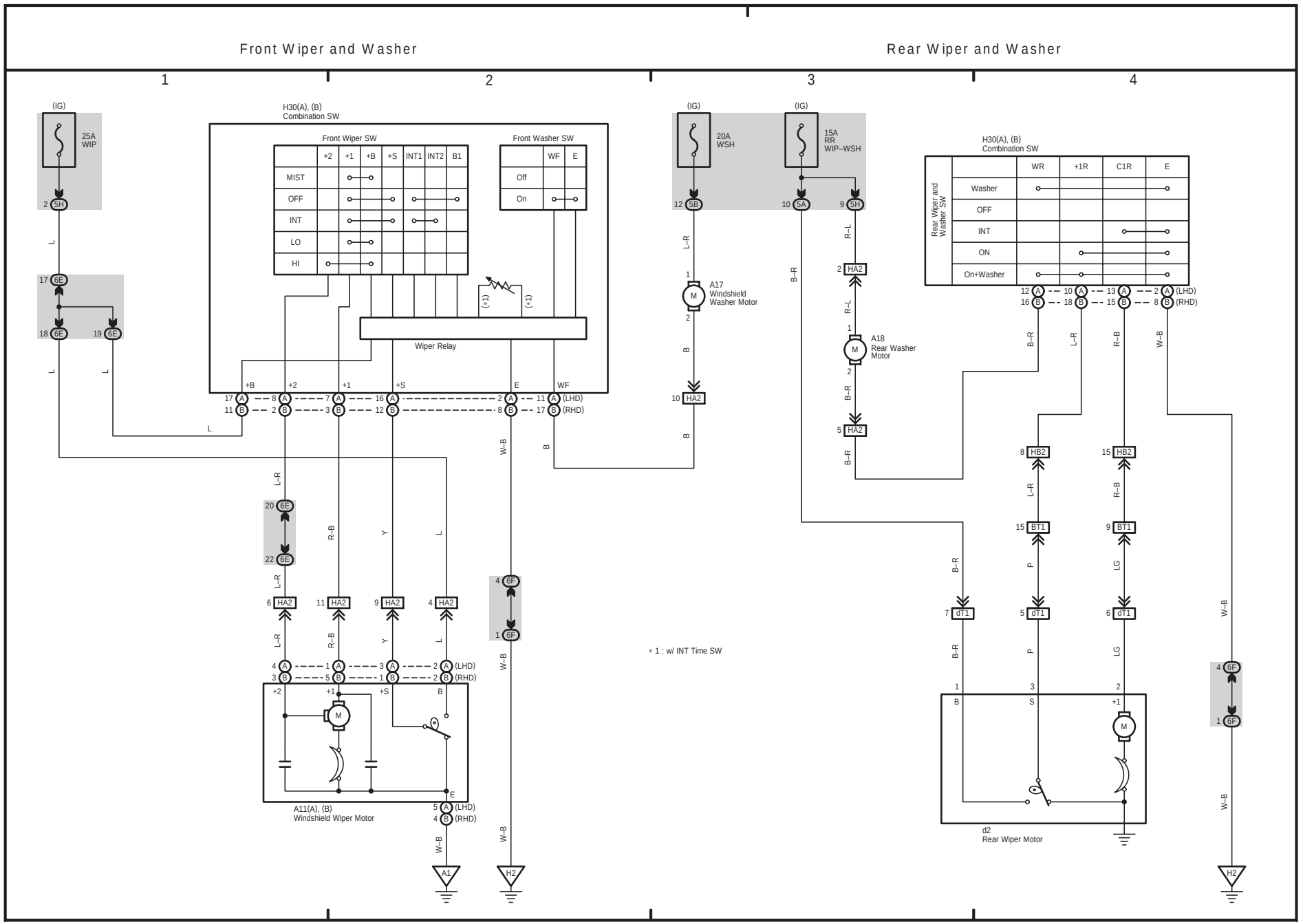
Front Wiper and Washer
Rear Wiper and Washer
1
2
3
4
(IG)
25A WIP
H30(A), (B) Combination SW
Front Wiper SW
Front Washer SW
MIST
OFF
INT
LO
HI
Off
On
Wiper Relay
20A WSH
15A RR WIP–WSH
A17 Windshield Washer Motor
A18 Rear Washer Motor
Rear Wiper and Washer SW
Washer
ON
On+Washer
A11(A), (B) Windshield Wiper Motor
d2 Rear Wiper Motor
(LHD)
(RHD)
* 1 : w/ INT Time SW

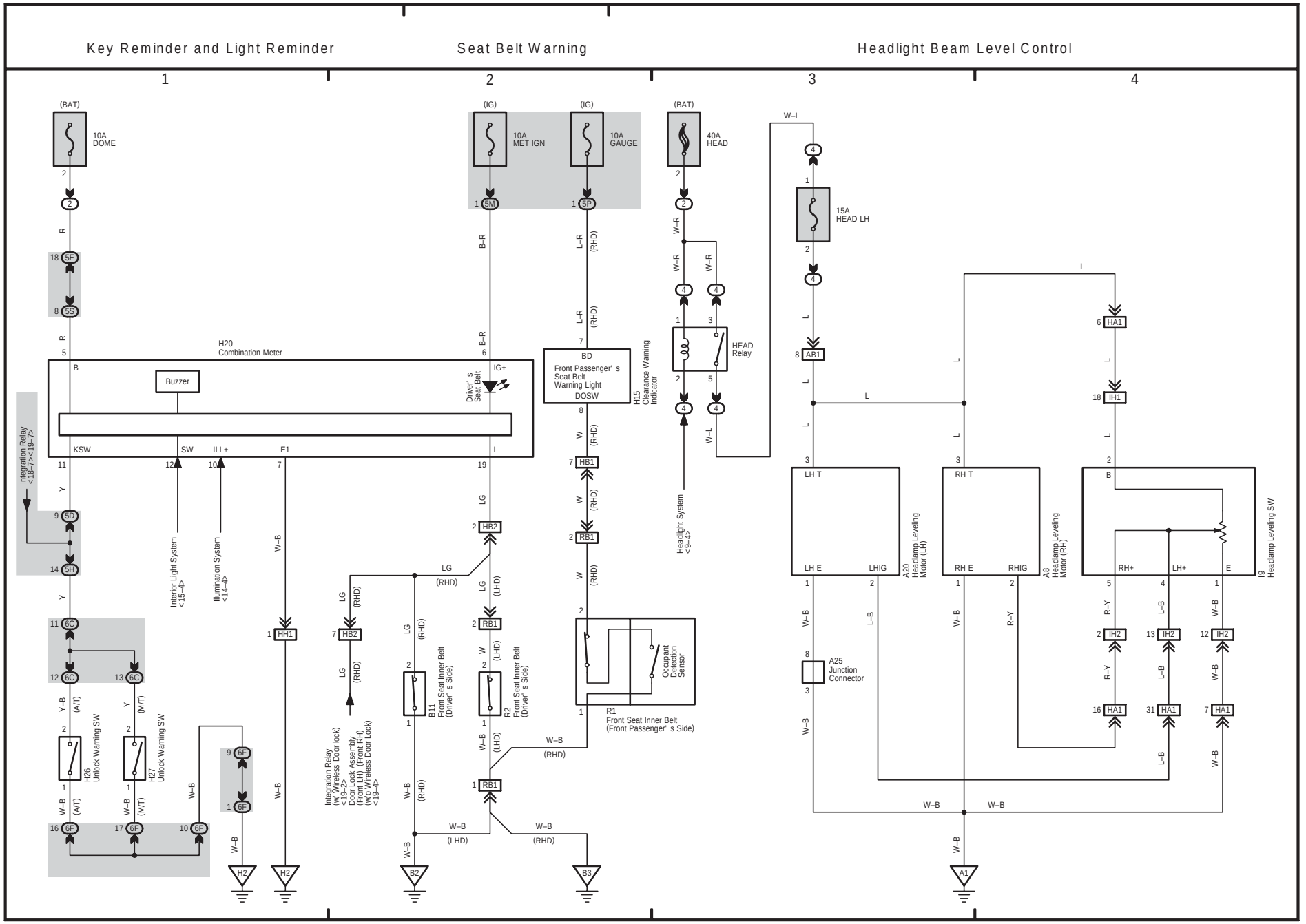
Key Reminder and Light Reminder
Seat Belt Warning
Headlight Beam Level Control
1
2
3
4
(BAT)
10A DOME
(IG)
10A MET IGN
10A GAUGE
40A HEAD
15A HEAD LH
H20 Combination Meter
Buzzer
Driver's Seat Belt
IG+
KSW
SW
ILL+
E1
L
Integration Relay <18–7><19–7>
Interior Light System <15–4>
Illumination System <14–4>
BD Front Passenger's Seat Belt Warning Light DOSW
H15 Clearance Warning Indicator
HEAD Relay
Headlight System <9–4>
LH T
RH T
LH E
LHIG
RH E
RHIG
RH+
LH+
E
A20 Headlamp Leveling Motor (LH)
A8 Headlamp Leveling Motor (RH)
I9 Headlamp Leveling SW
A25 Junction Connector
H26 Unlock Warning SW
H27 Unlock Warning SW
Integration Relay (w/ Wireless Door lock) <19–2>
Door Lock Assembly (Front LH), (Front RH) (w/o Wireless Door Lock) <19–4>
B11 Front Seat Inner Belt (Driver's Side)
R2 Front Seat Inner Belt (Driver's Side)
R1 Front Seat Inner Belt (Front Passenger's Side)
Occupant Detection Sensor
H2
B2
B3
A1

## 26 HIACE

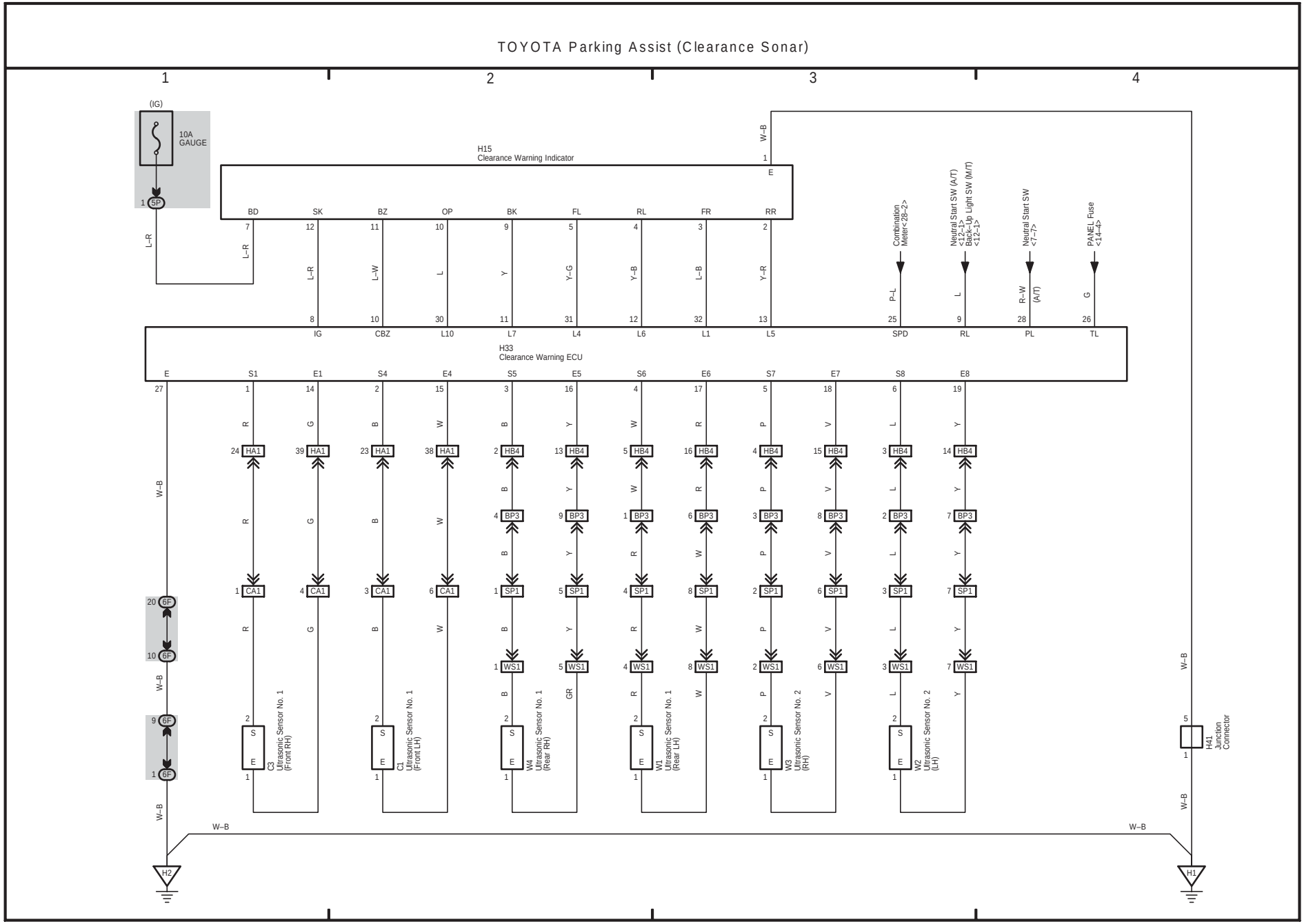
TOYOTA Parking Assist (Clearance Sonar)
1
2
3
4
(IG)
10A GAUGE
5P
H15
Clearance Warning Indicator
BD
SK
BZ
OP
BK
FL
RL
FR
RR
Combination Meter<28–2>
Neutral Start SW (A/T) <12–1> Back–Up Light SW (M/T) <12–1>
Neutral Start SW <7–7>
PANEL Fuse <14–4>
H33
Clearance Warning ECU
IG
CBZ
L10
L7
L4
L6
L1
L5
SPD
RL
PL
TL
E
S1
E1
S4
E4
S5
E5
S6
E6
S7
E7
S8
E8
HA1
HB4
BP3
CA1
SP1
WS1
C3 Ultrasonic Sensor No. 1 (Front RH)
C1 Ultrasonic Sensor No. 1 (Front LH)
W4 Ultrasonic Sensor No. 1 (Rear RH)
W1 Ultrasonic Sensor No. 1 (Rear LH)
W3 Ultrasonic Sensor No. 2 (RH)
W2 Ultrasonic Sensor No. 2 (LH)
H41 Junction Connector
6F
H2
H1
W–B

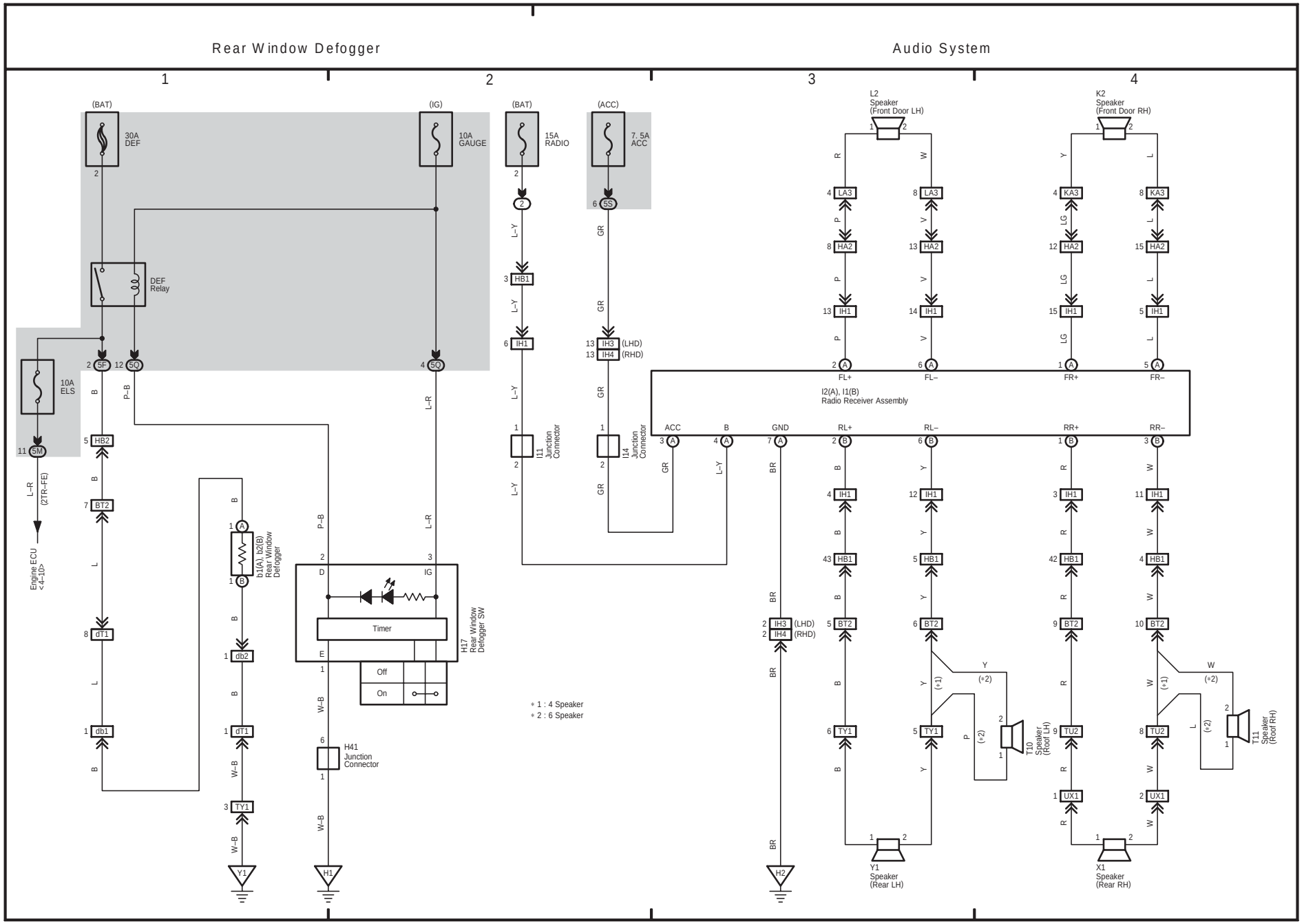
Rear Window Defogger
Audio System
1
2
3
4
(BAT)
(IG)
30A DEF
10A GAUGE
DEF Relay
10A ELS
2 5F
12 5Q
4 5Q
11 5M
5 HB2
7 BT2
8 dT1
1 db1
L–R (2TR–FE)
Engine ECU <4–1D>
1 A
1 B
b1(A), b2(B) Rear Window Defogger
1 db2
1 dT1
3 TY1
Y1
P–B
L–R
D
IG
E
Timer
Off
On
H17 Rear Window Defogger SW
W–B
6 H41 Junction Connector
H1
(BAT)
(ACC)
15A RADIO
7. 5A ACC
2
2
L–Y
3 HB1
6 IH1
1
2
I11 Junction Connector
6 5S
GR
13 IH3 (LHD)
13 IH4 (RHD)
I14 Junction Connector
ACC
B
GND
BR
2 IH3 (LHD)
2 IH4 (RHD)
H2
L2 Speaker (Front Door LH)
K2 Speaker (Front Door RH)
R
W
Y
L
4 LA3
8 LA3
4 KA3
8 KA3
P
V
LG
L
8 HA2
13 HA2
12 HA2
15 HA2
13 IH1
14 IH1
15 IH1
5 IH1
2 A
6 A
1 A
5 A
FL+
FL–
FR+
FR–
I2(A), I1(B) Radio Receiver Assembly
RL+
RL–
RR+
RR–
4 IH1
12 IH1
3 IH1
11 IH1
43 HB1
5 HB1
42 HB1
4 HB1
5 BT2
6 BT2
9 BT2
10 BT2
6 TY1
5 TY1
9 TU2
8 TU2
1 UX1
2 UX1
(*1)
(*2)
T10 Speaker (Roof LH)
T11 Speaker (Roof RH)
Y1 Speaker (Rear LH)
X1 Speaker (Rear RH)
* 1 : 4 Speaker
* 2 : 6 Speaker

(Cont. next page)

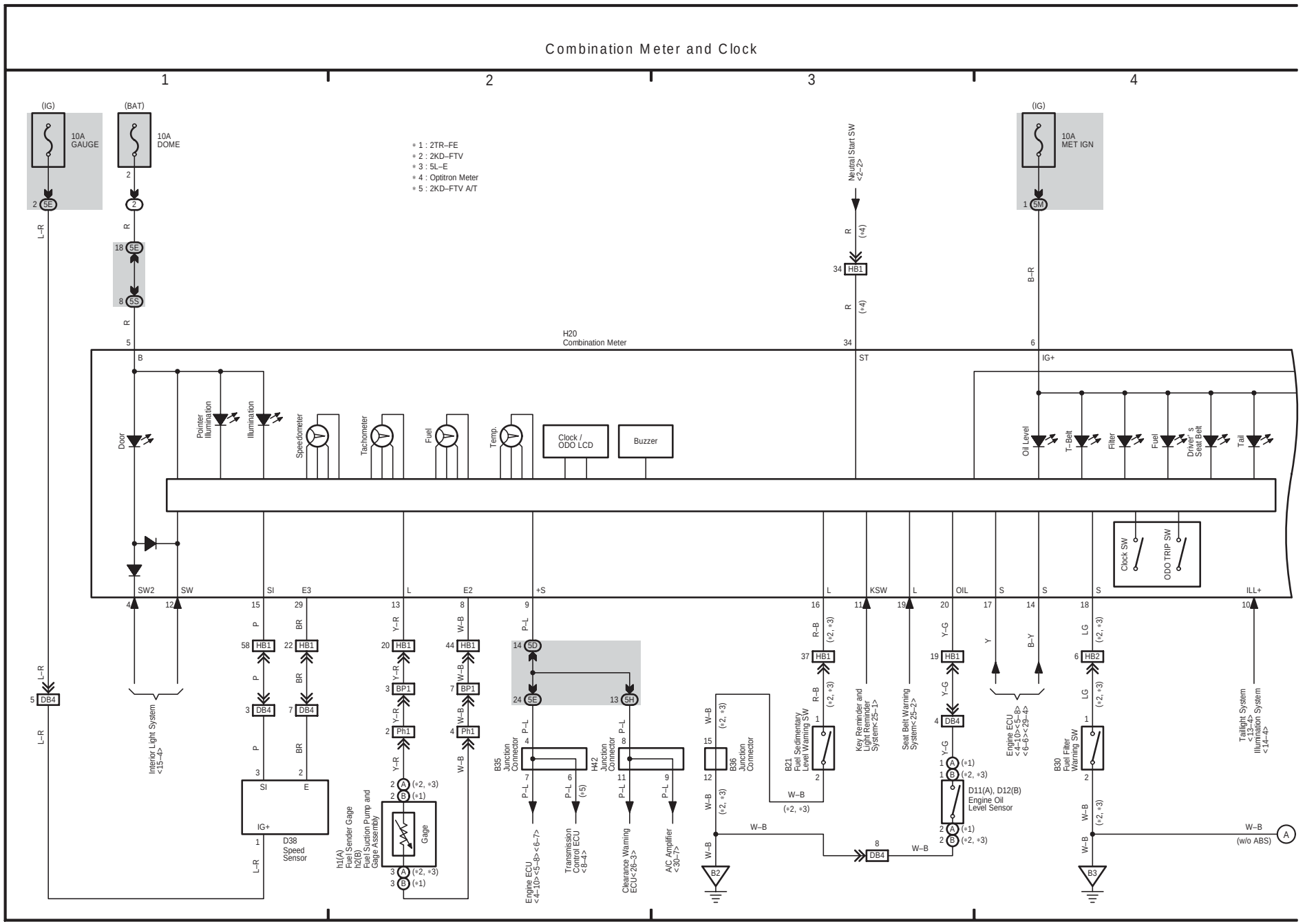

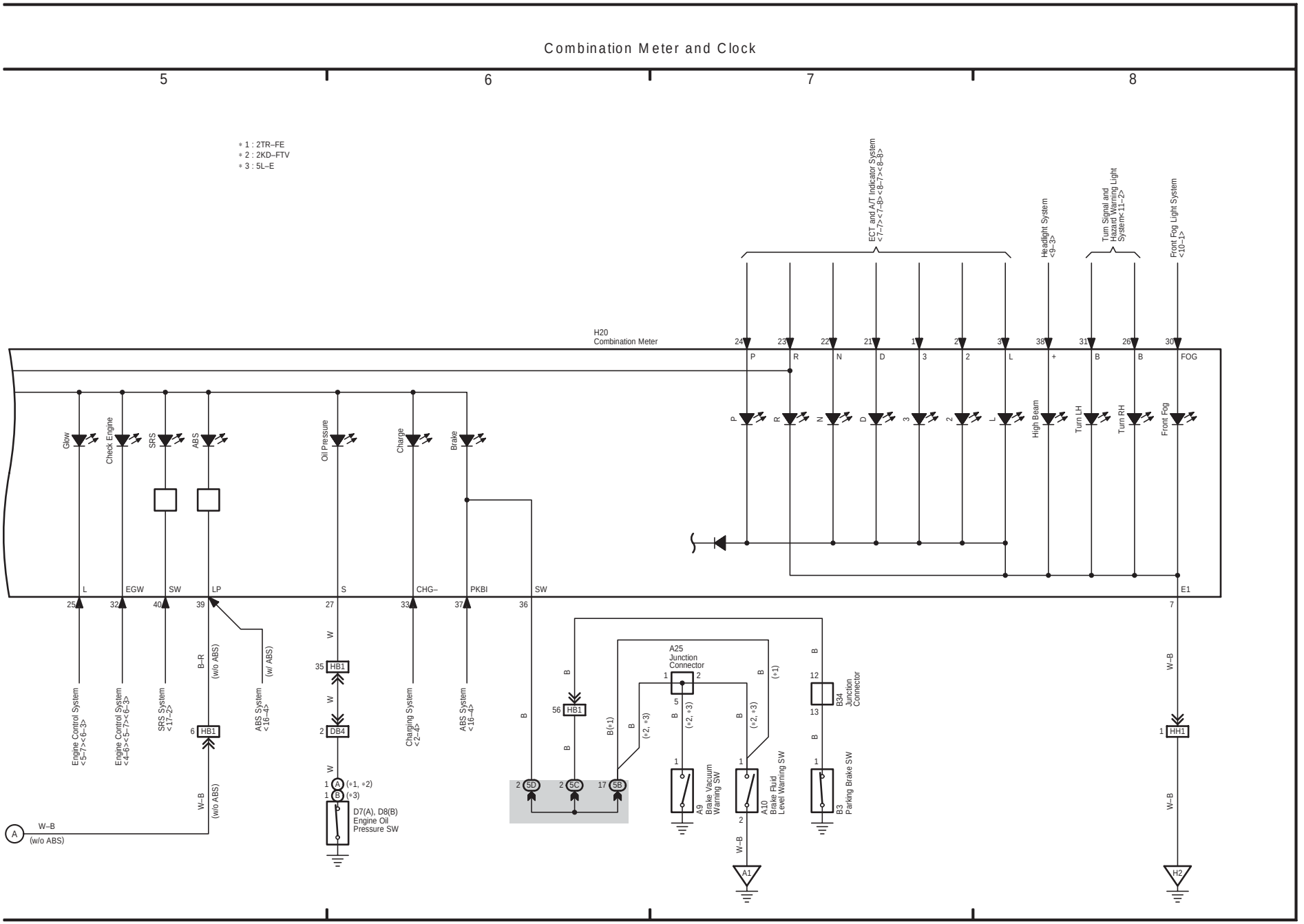
Combination Meter and Clock
5
6
7
8
* 1 : 2TR–FE
* 2 : 2KD–FTV
* 3 : 5L–E
ECT and A/T Indicator System <1–7><7–8><8–7><8–8>
Headlight System <9–3>
Turn Signal and Hazard Warning Light System <11–2>
Front Fog Light System <10–1>
H20
Combination Meter
24 P
23 R
22 N
21 D
1 3
2 2
3 L
38 +
31 B
26 B
30 FOG
Glow
Check Engine
SRS
ABS
Oil Pressure
Charge
Brake
High Beam
Turn LH
Turn RH
Front Fog
L
EGW
SW
LP
S
CHG–
PKBI
SW
E1
25
32
40
39
27
33
37
36
7
Engine Control System <5–7><6–3>
Engine Control System <4–6><5–7><6–3>
SRS System <17–2>
B–R
(w/o ABS)
(w/ ABS)
ABS System <16–4>
W
35 HB1
2 DB4
6 HB1
W–B
(w/o ABS)
Charging System <2–4>
ABS System <16–4>
B
56 HB1
B(*1)
A25
Junction Connector
(*2, *3)
(*1)
12
13
B34
Junction Connector
1 A (*1, *2)
1 B (*3)
D7(A), D8(B)
Engine Oil Pressure SW
2 5D
2 5C
17 5B
A9
Brake Vacuum Warning SW
A10
Brake Fluid Level Warning SW
B3
Parking Brake SW
W–B
A1
H2
A
W–B
(w/o ABS)

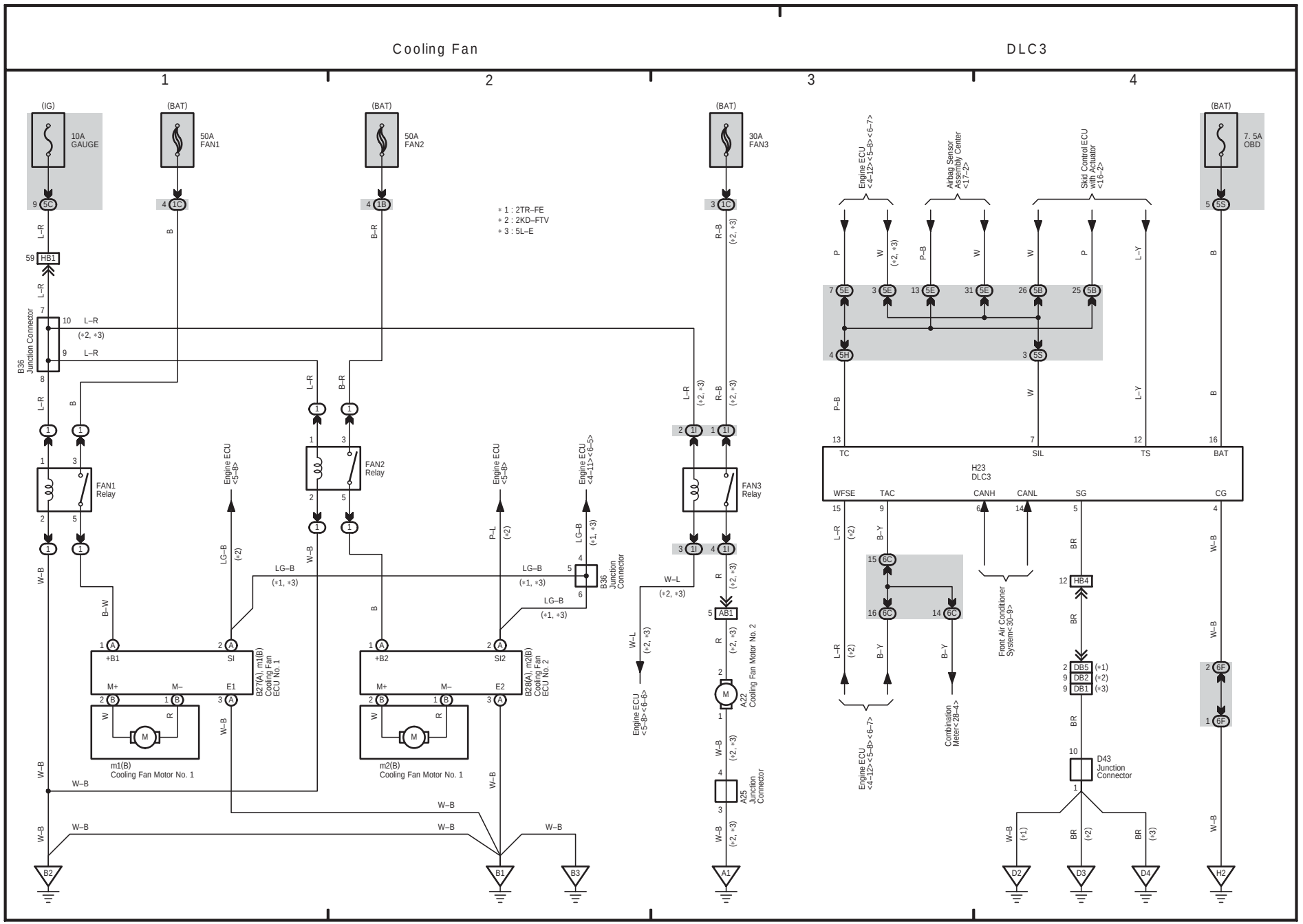
Cooling Fan
DLC3
1
2
3
4
(IG)
10A GAUGE
(BAT)
50A FAN1
50A FAN2
30A FAN3
7. 5A OBD
* 1 : 2TR–FE
* 2 : 2KD–FTV
* 3 : 5L–E
B36 Junction Connector
FAN1 Relay
FAN2 Relay
FAN3 Relay
Engine ECU <4–12><5–8><6–7>
Airbag Sensor Assembly Center <17–2>
Skid Control ECU with Actuator <16–2>
H23 DLC3
TC
SIL
TS
BAT
WFSE
TAC
CANH
CANL
SG
CG
Front Air Conditioner System<30–9>
Combination Meter<28–4>
D43 Junction Connector
A22 Cooling Fan Motor No. 2
A25 Junction Connector
B27(A), m1(B) Cooling Fan ECU No. 1
B28(A), m2(B) Cooling Fan ECU No. 2
m1(B) Cooling Fan Motor No. 1
m2(B) Cooling Fan Motor No. 1
+B1
SI
+B2
SI2
M+
M–
E1
E2
B2
B1
B3
A1
D2
D3
D4
H2

(Cont. next page)

## Front Air Conditioner (2TR–FE, 2KD–FTV) and PTC Heater (2KD–FTV)

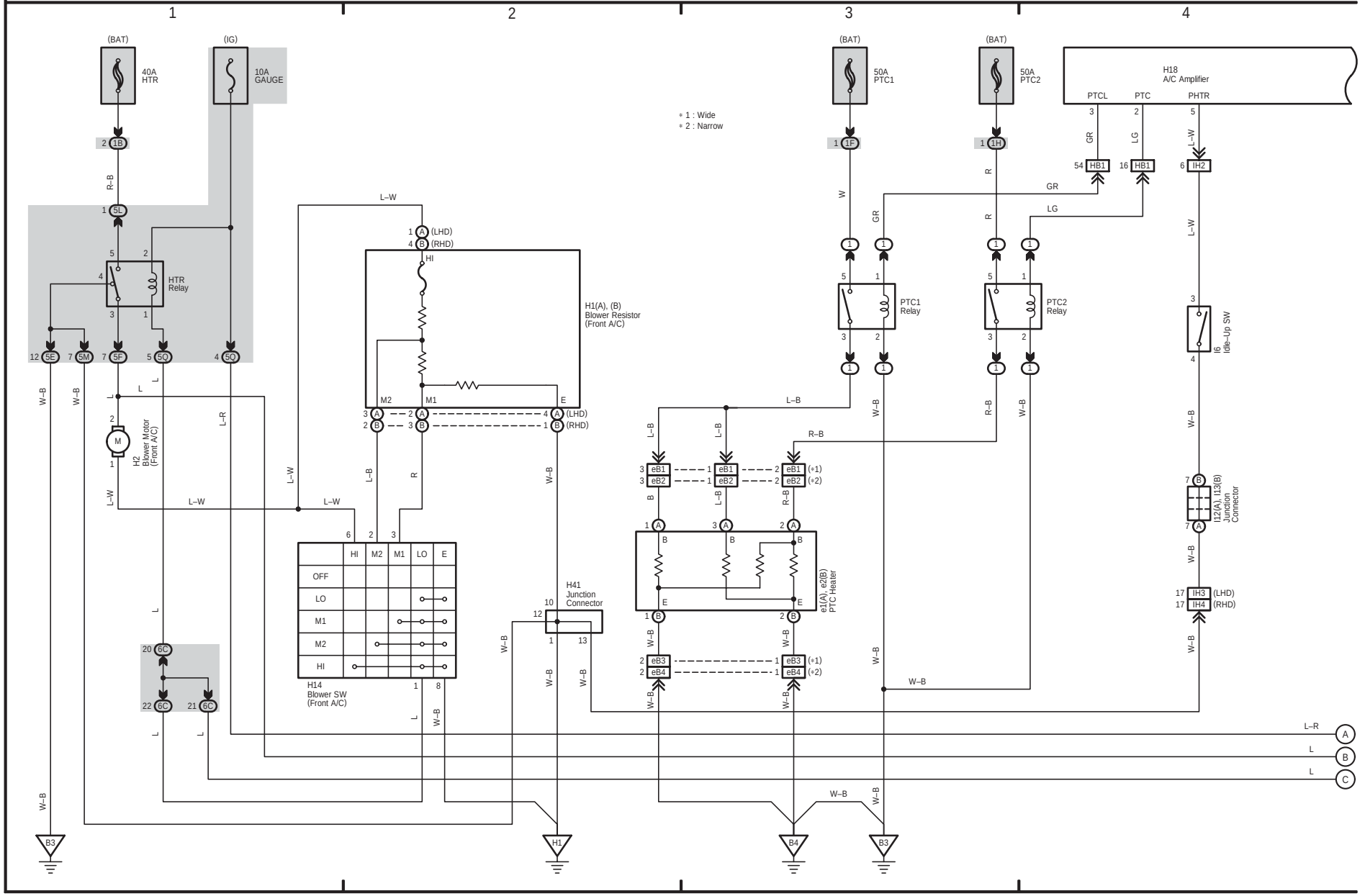

**30 HIACE (Cont' d)**

(Cont. next page)

Front Air Conditioner (2TR–FE, 2KD–FTV) and PTC Heater (2KD–FTV)

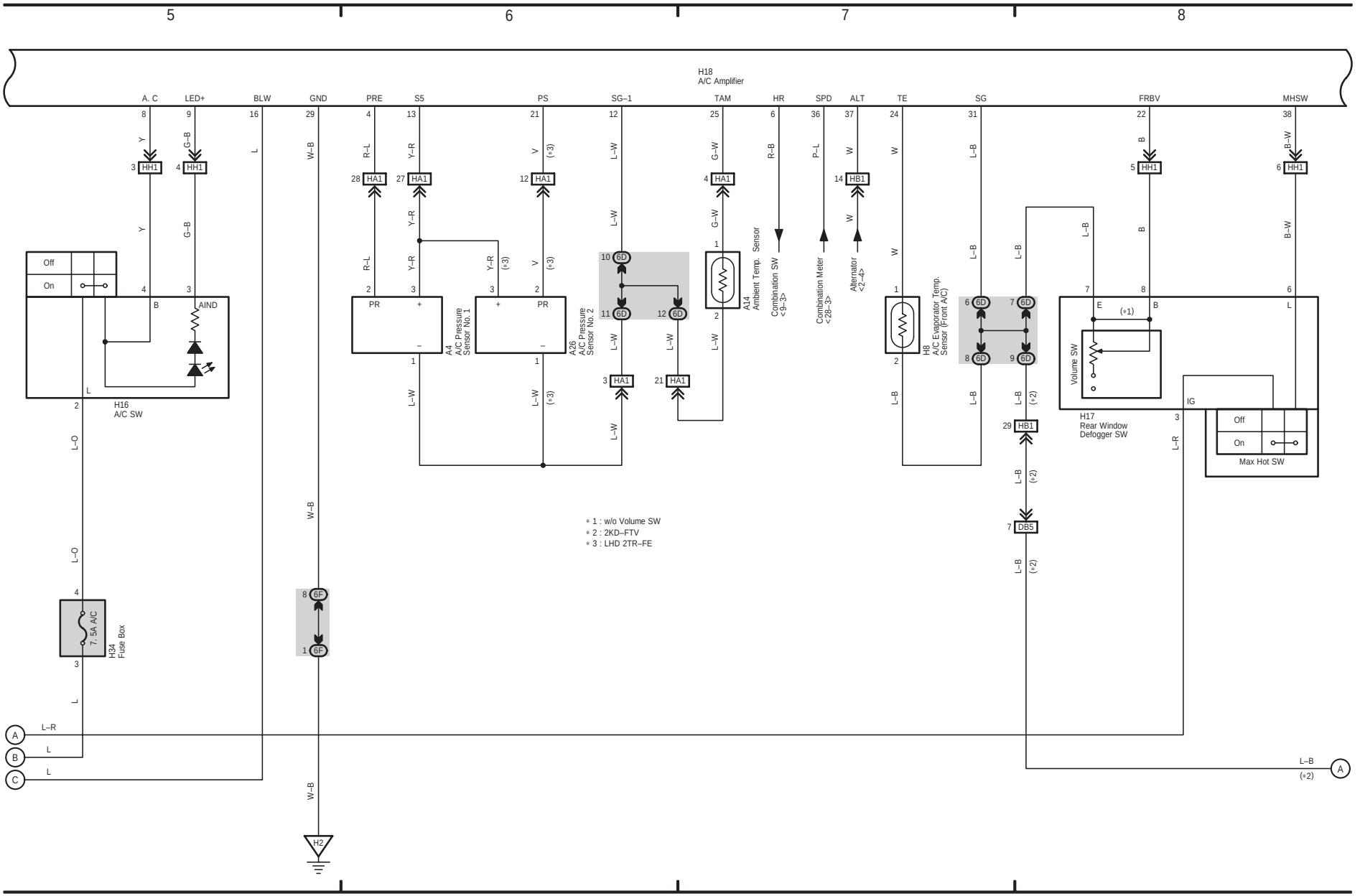

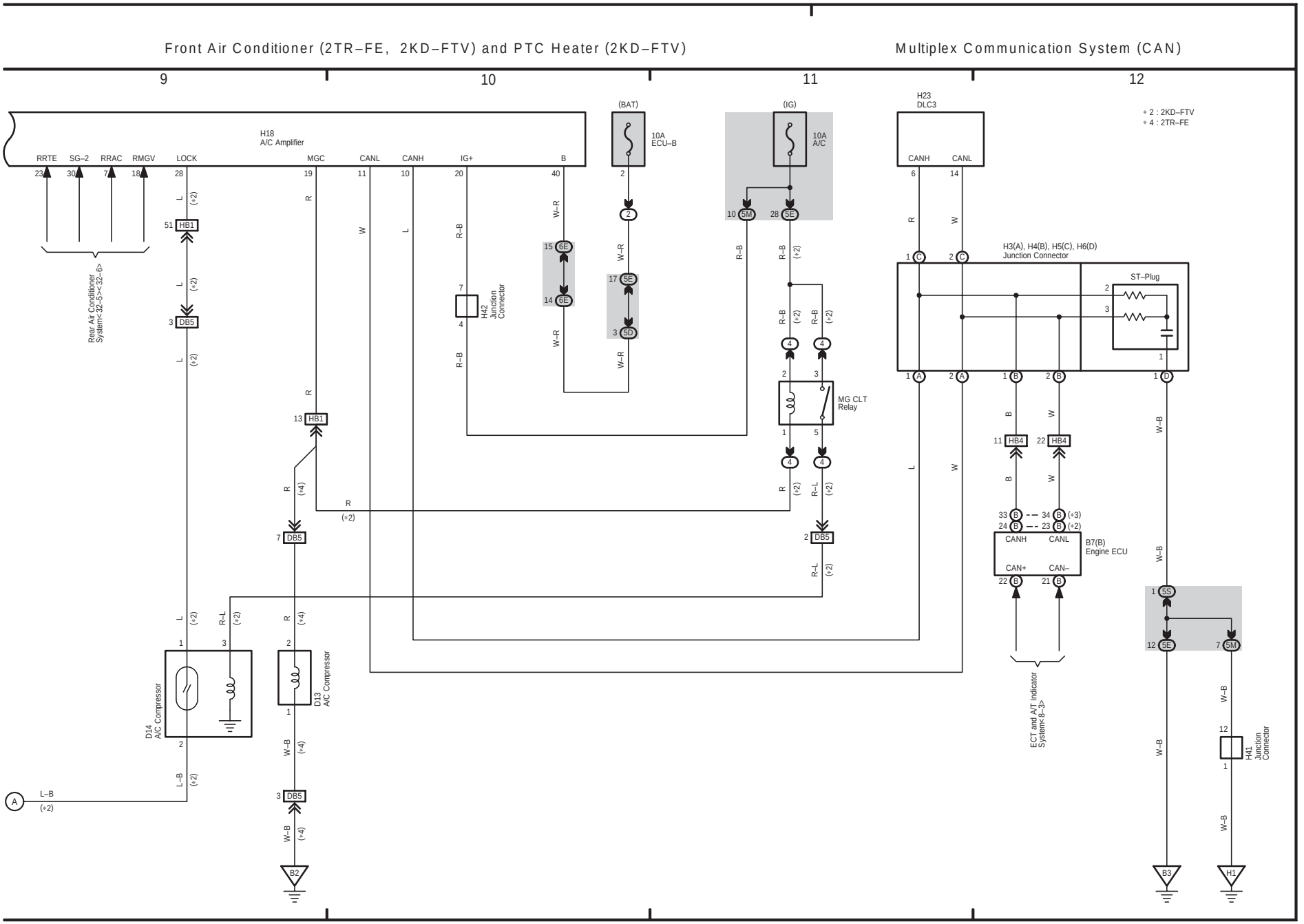
Front Air Conditioner (2TR–FE, 2KD–FTV) and PTC Heater (2KD–FTV)
Multiplex Communication System (CAN)
9
10
11
12
H18
A/C Amplifier
RRTE
SG–2
RRAC
RMGV
LOCK
MGC
CANL
CANH
IG+
B
(BAT)
10A
ECU–B
(IG)
10A
A/C
H23
DLC3
CANH
CANL
* 2 : 2KD–FTV
* 4 : 2TR–FE
Rear Air Conditioner System<32–5–<32–6>
H42
Junction
Connector
MG CLT
Relay
H3(A), H4(B), H5(C), H6(D)
Junction Connector
ST–Plug
D14
A/C Compressor
D13
A/C Compressor
B7(B)
Engine ECU
CAN+
CAN–
ECT and A/T Indicator System<8–3>
H41
Junction
Connector
B2
B3
H1

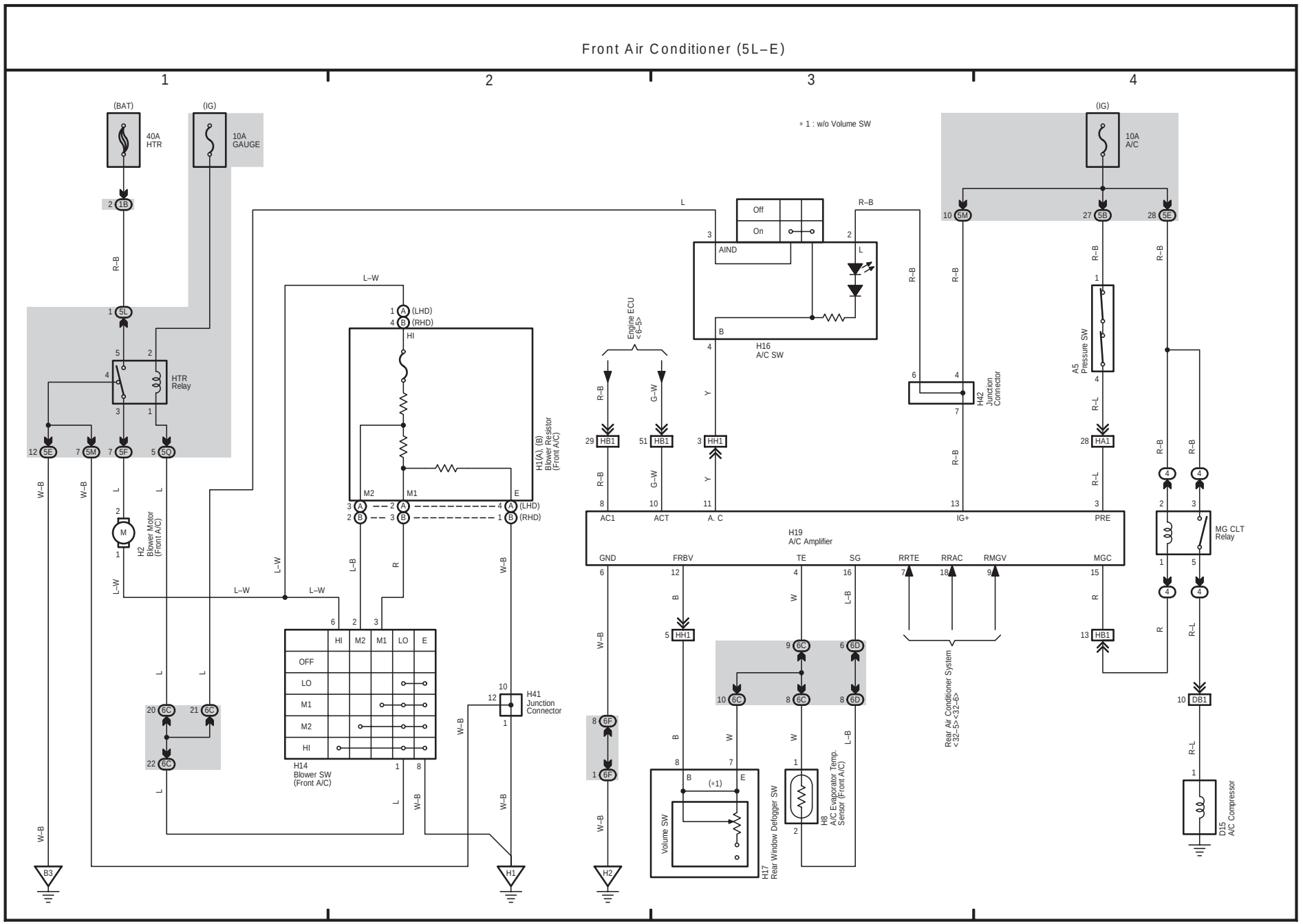
Front Air Conditioner (5L–E)
1
2
3
4
(BAT)
(IG)
40A HTR
10A GAUGE
10A A/C
* 1 : w/o Volume SW
HTR Relay
H2 Blower Motor (Front A/C)
H1(A), (B) Blower Resistor (Front A/C)
H14 Blower SW (Front A/C)
H16 A/C SW
AIND
Off
On
Engine ECU <6–5>
H42 Junction Connector
A5 Pressure SW
H19 A/C Amplifier
AC1
ACT
A. C
IG+
PRE
GND
FRBV
TE
SG
RRTE
RRAC
RMGV
MGC
MG CLT Relay
H41 Junction Connector
Rear Air Conditioner System <32–5><32–6>
Volume SW
H17 Rear Window Defogger SW
H8 A/C Evaporator Temp. Sensor (Front A/C)
D15 A/C Compressor
B3
H1
H2

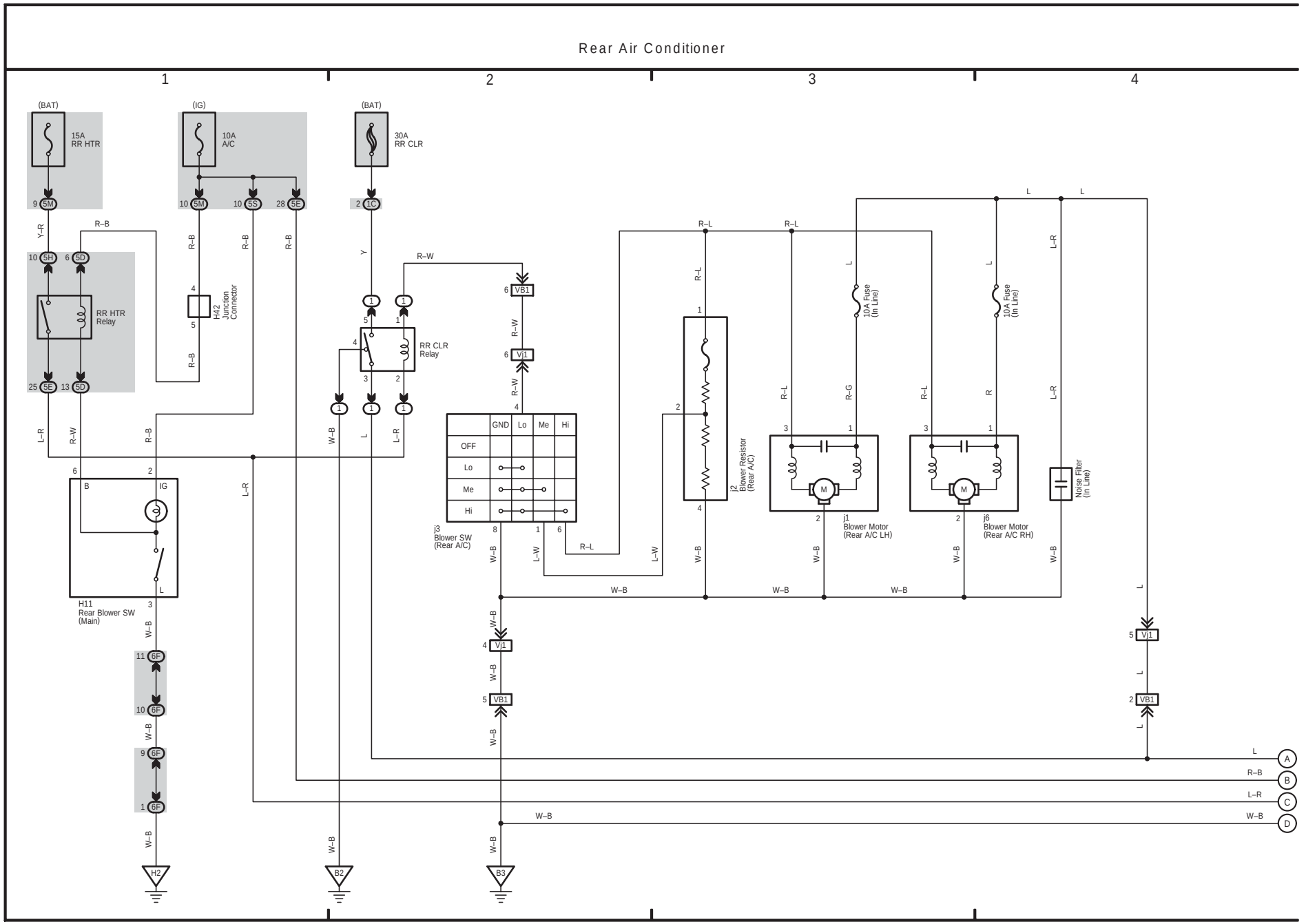
Rear Air Conditioner
1
2
3
4
(BAT)
15A
RR HTR
(IG)
10A
A/C
(BAT)
30A
RR CLR
RR HTR
Relay
H42
Junction
Connector
RR CLR
Relay
GND
Lo
Me
Hi
OFF
Lo
Me
Hi
j3
Blower SW
(Rear A/C)
j2
Blower Resistor
(Rear A/C)
10A Fuse
(In Line)
10A Fuse
(In Line)
j1
Blower Motor
(Rear A/C LH)
j6
Blower Motor
(Rear A/C RH)
Noise Filter
(In Line)
H11
Rear Blower SW
(Main)
H2
B2
B3
A
B
C
D

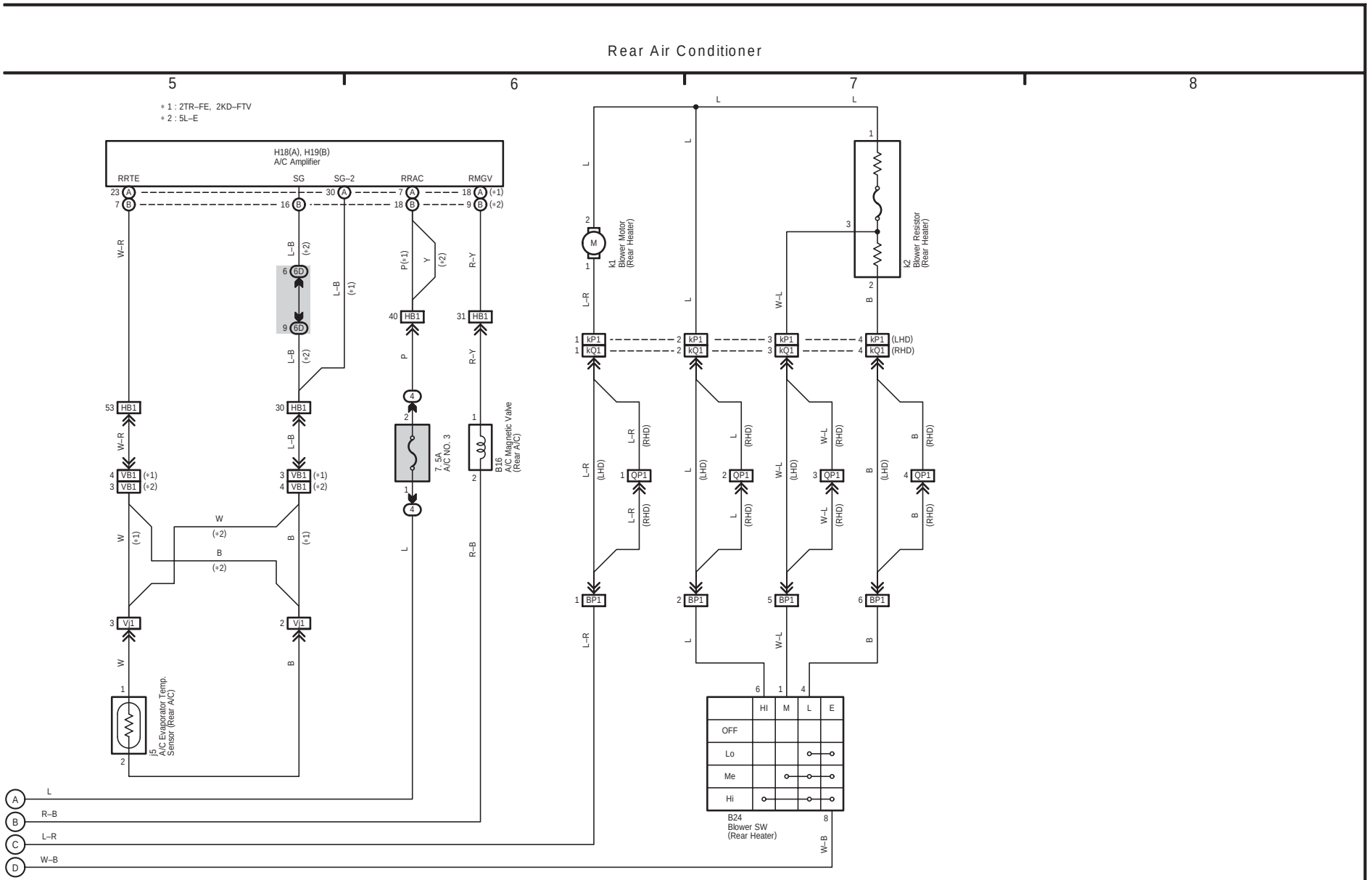
Rear Air Conditioner
5
6
7
8
* 1 : 2TR–FE, 2KD–FTV
* 2 : 5L–E
H18(A), H19(B)
A/C Amplifier
RRTE
SG
SG–2
RRAC
RMGV
W–R
L–B
P
R–Y
W
B
L
R–B
L–R
W–B
k1
Blower Motor
(Rear Heater)
k2
Blower Resistor
(Rear Heater)
(LHD)
(RHD)
7. 5A
A/C NO. 3
B16
A/C Magnetic Valve
(Rear A/C)
J5
A/C Evaporator Temp.
Sensor (Rear A/C)
B24
Blower SW
(Rear Heater)
HI
M
L
E
OFF
Lo
Me
Hi

# HIACE
# ELECTRICAL WIRING DIAGRAM
# SYSTEM CIRCUITS


| | Page |
|---|---|
| ABS | 218 |
| Audio System | 248 |
| Automatic Light Control | 156 |
| Back–Up Light | 140 |
| Charging (2TR–FE, 2KD–FTV) | 86 |
| Charging (5L–E) | 88 |
| Cigarette Lighter | 236 |
| Clock | 250 |
| Combination Meter | 250 |
| Cooling Fan (2TR–FE, 2KD–FTV) | 256 |
| Cooling Fan (5L–E) | 262 |
| DLC3 | 122 |
| Door Closer | 188 |
| Door Lock Control (LHD) | 176 |
| Door Lock Control (RHD) | 182 |
| ECT and A/T Indicator (2KD–FTV) | 210 |
| ECT and A/T Indicator (2TR–FE) | 204 |
| Engine Control (2KD–FTV) | 104 |
| Engine Control (2TR–FE) | 92 |
| Engine Control (5L–E) | 114 |
| Front Air Conditioner (2TR–FE, 2KD–FTV) | 268 |
| Front Air Conditioner (5L–E) | 278 |
| Front Fog Light | 128 |
| Front Wiper and Washer | 162 |
| Headlight | 124 |
| Headlight Beam Level Control | 160 |
| Horn | 238 |
| Ignition | 90 |
| Illumination | 146 |
| Interior Light | 150 |
| Key Reminder | 230 |
| Light Reminder | 230 |
| Multiplex Communication System (CAN) | 288 |
| Power Source | 78 |
| Power Window (LHD) | 168 |
| Power Window (RHD) | 172 |
| PTC Heater (2KD–FTV) | 282 |
| Rear Air Conditioner | 290 |
| Rear Fog Light | 130 |
| Rear Window Defogger | 240 |
| Rear Wiper and Washer | 166 |
| Remote Control Mirror | 234 |
| Seat Belt Warning | 232 |
| Shift Lock | 228 |
| SRS | 223 |
| Starting | 82 |
| Stop Light | 138 |

| | Page |
|---|---|
| Taillight | 142 |
| TOYOTA Parking Assist (Clearance Sonar) | 242 |
| Turn Signal and Hazard Warning Light | 134 |
| Wireless Door Lock Control (LHD) | 192 |
| Wireless Door Lock Control (RHD) | 198 |

# F RELAY LOCATIONS

## [Engine Compartment]

* 1:2KD-FTV, 5L-E
* 2:2TR-FE

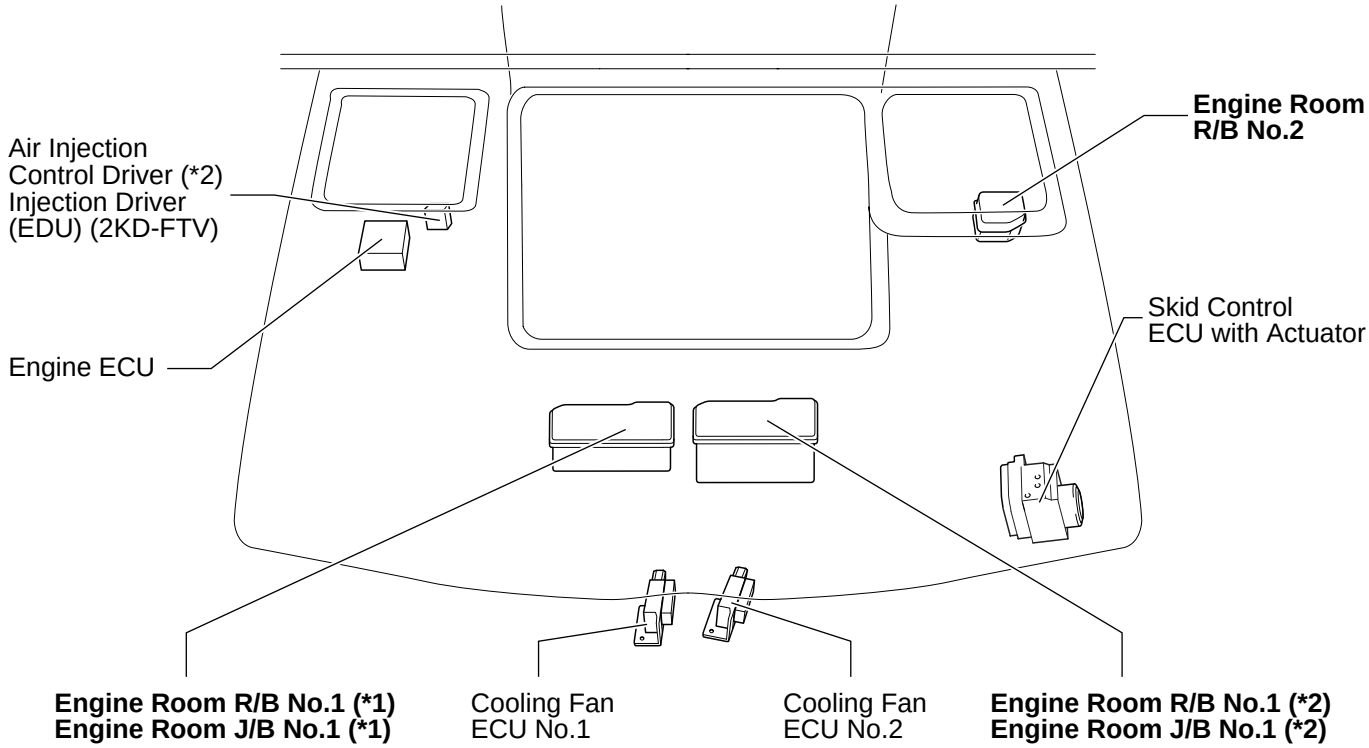


## [Body]

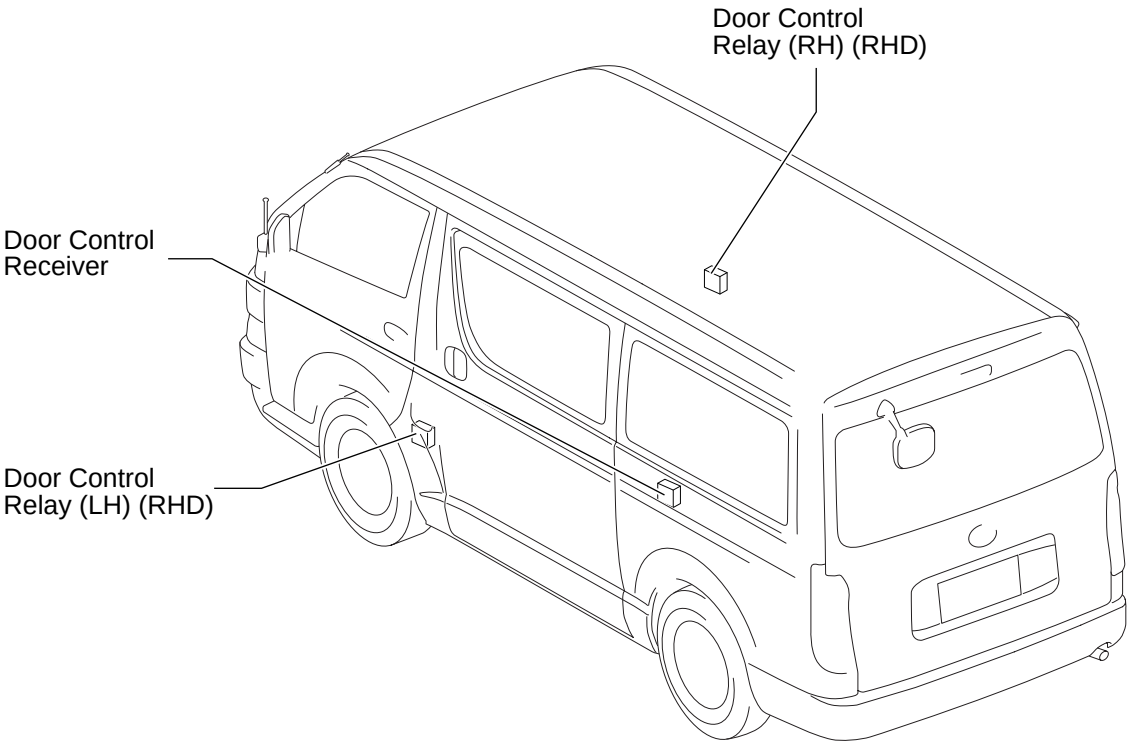

## [Instrument Panel]
## (LHD)

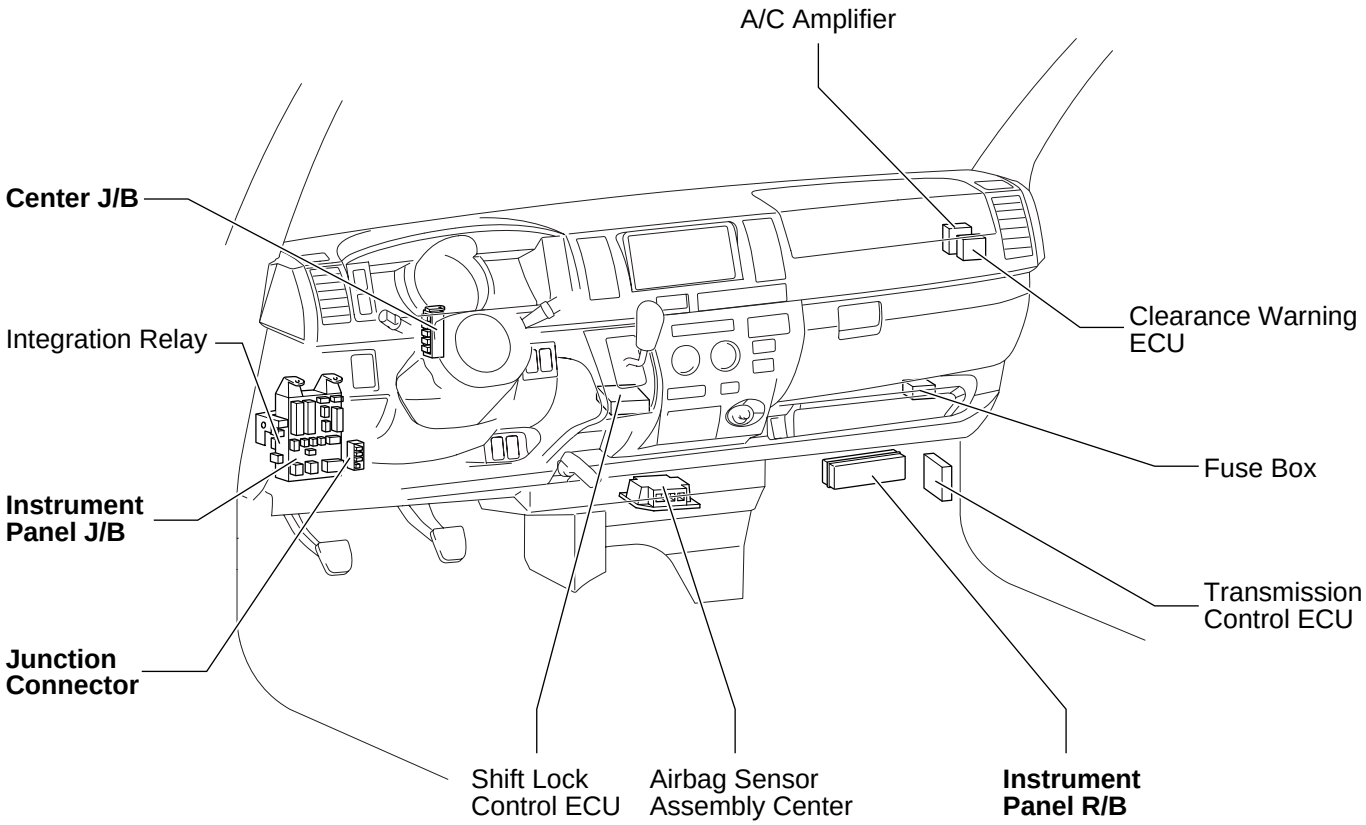


## (RHD)

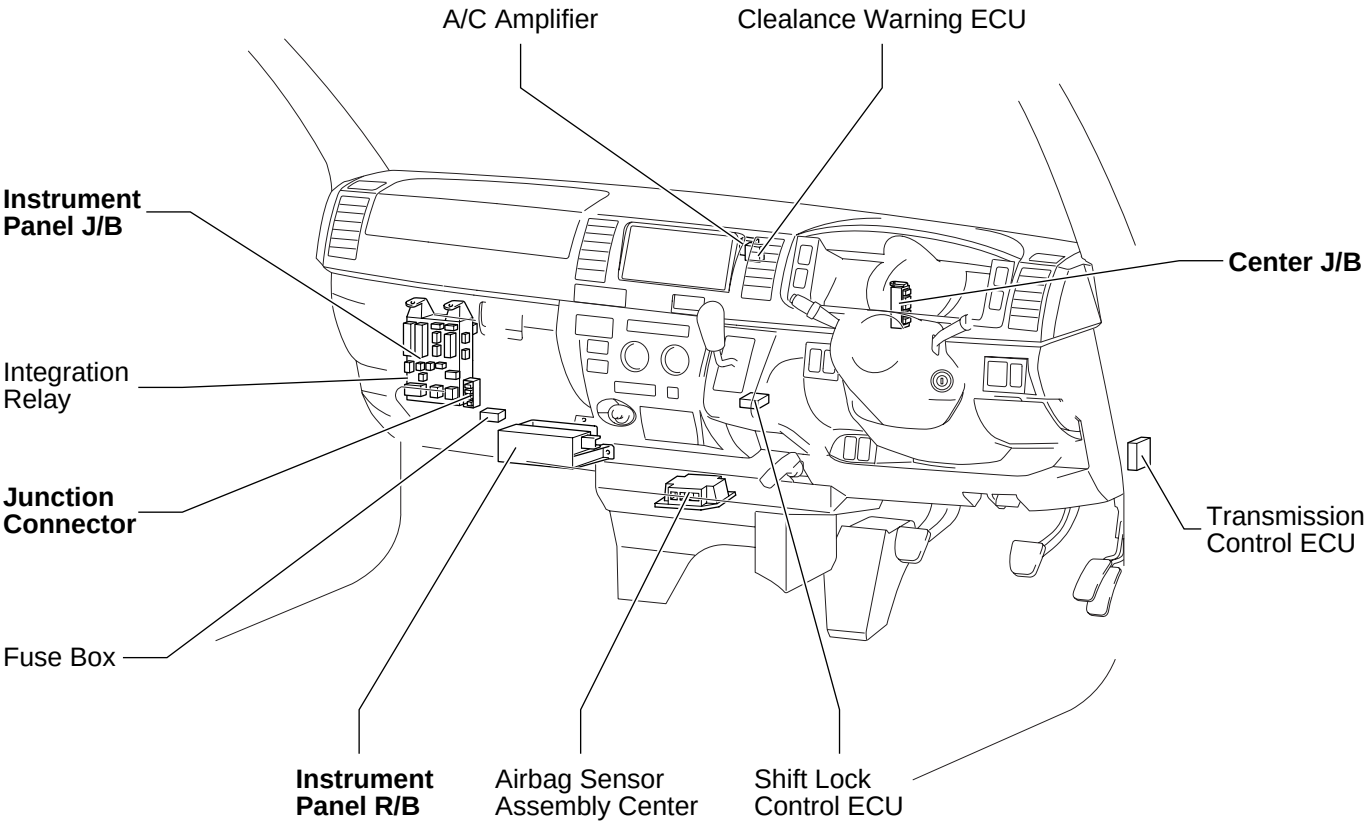

## F RELAY LOCATIONS

| | |
|---|---|
| ① : Engine Room R/B No.1<br>⬭ : Engine Room J/B No.1 | Engine Compartment Front (See Page 20) |

**[2TR–FE]**

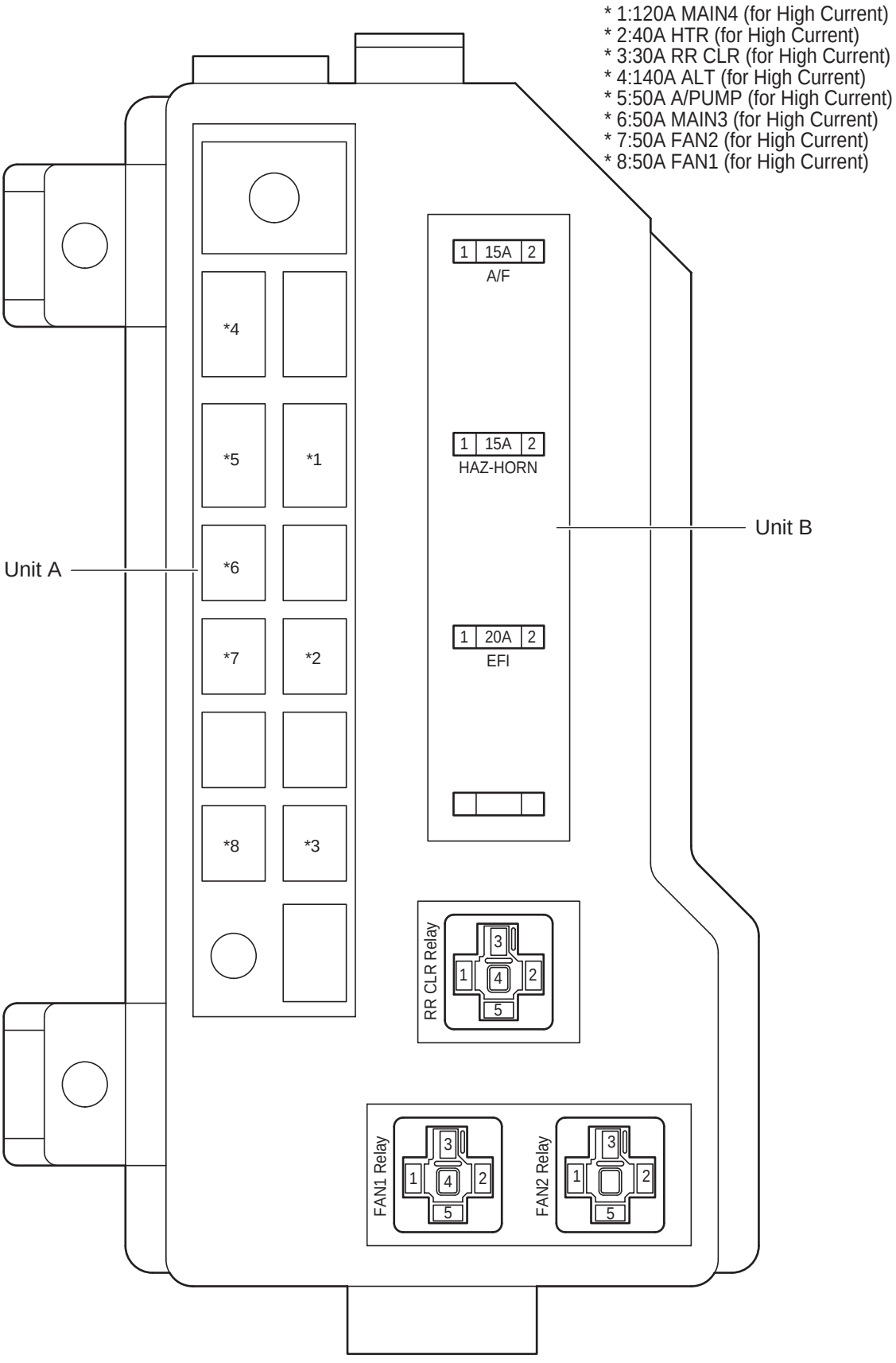

| | |
|---|---|
| ① : Engine Room R/B No.1<br>⬭ : Engine Room J/B No.1 | Engine Compartment Front (See Page 20) |

**[2KD–FTV, 5L–E]**

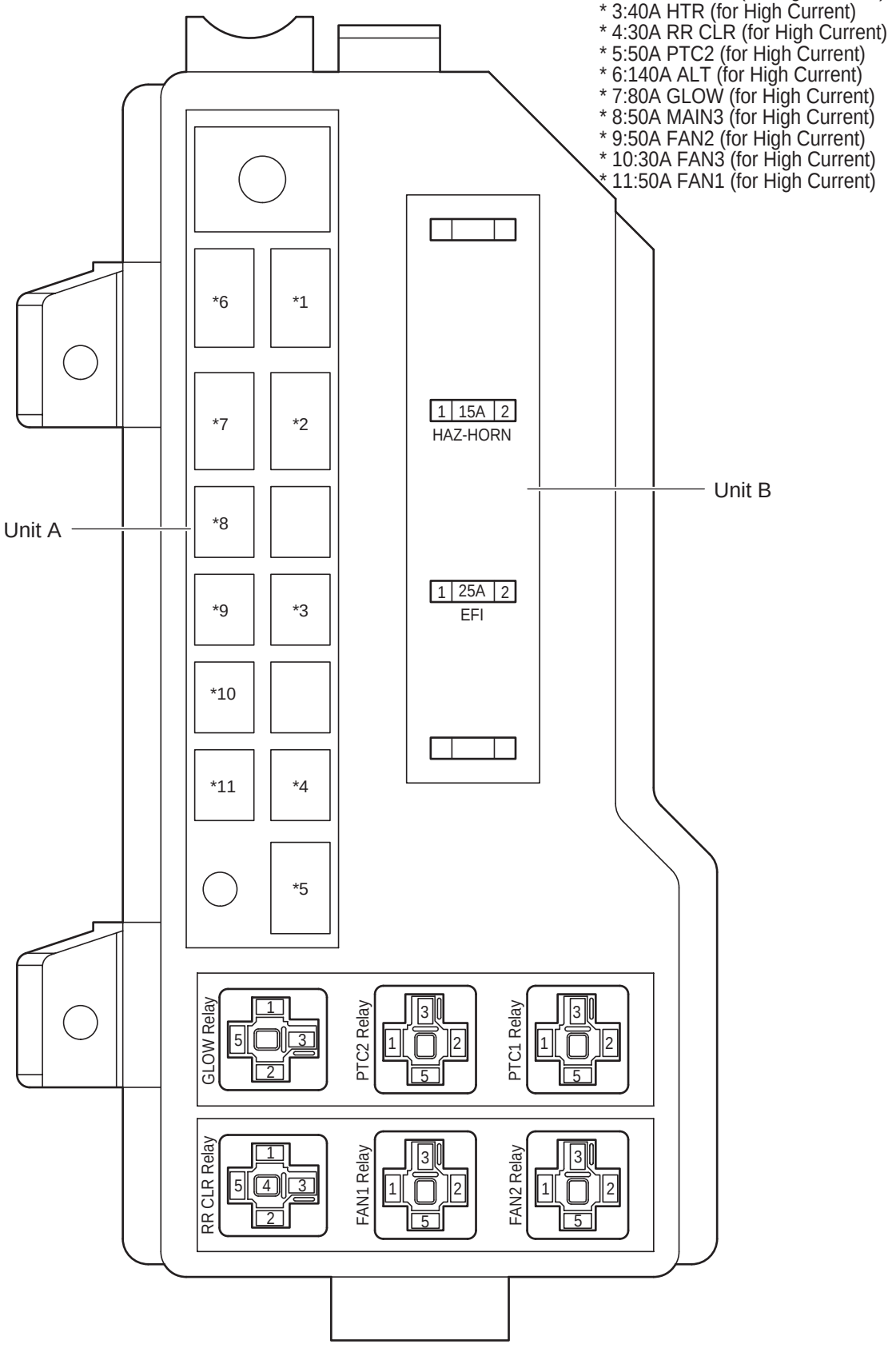

## F RELAY LOCATIONS

| | |
|---|---|
| ① : Engine Room R/B No.1<br>⬭ : Engine Room J/B No.1 | Engine Compartment Front (See Page 20) |

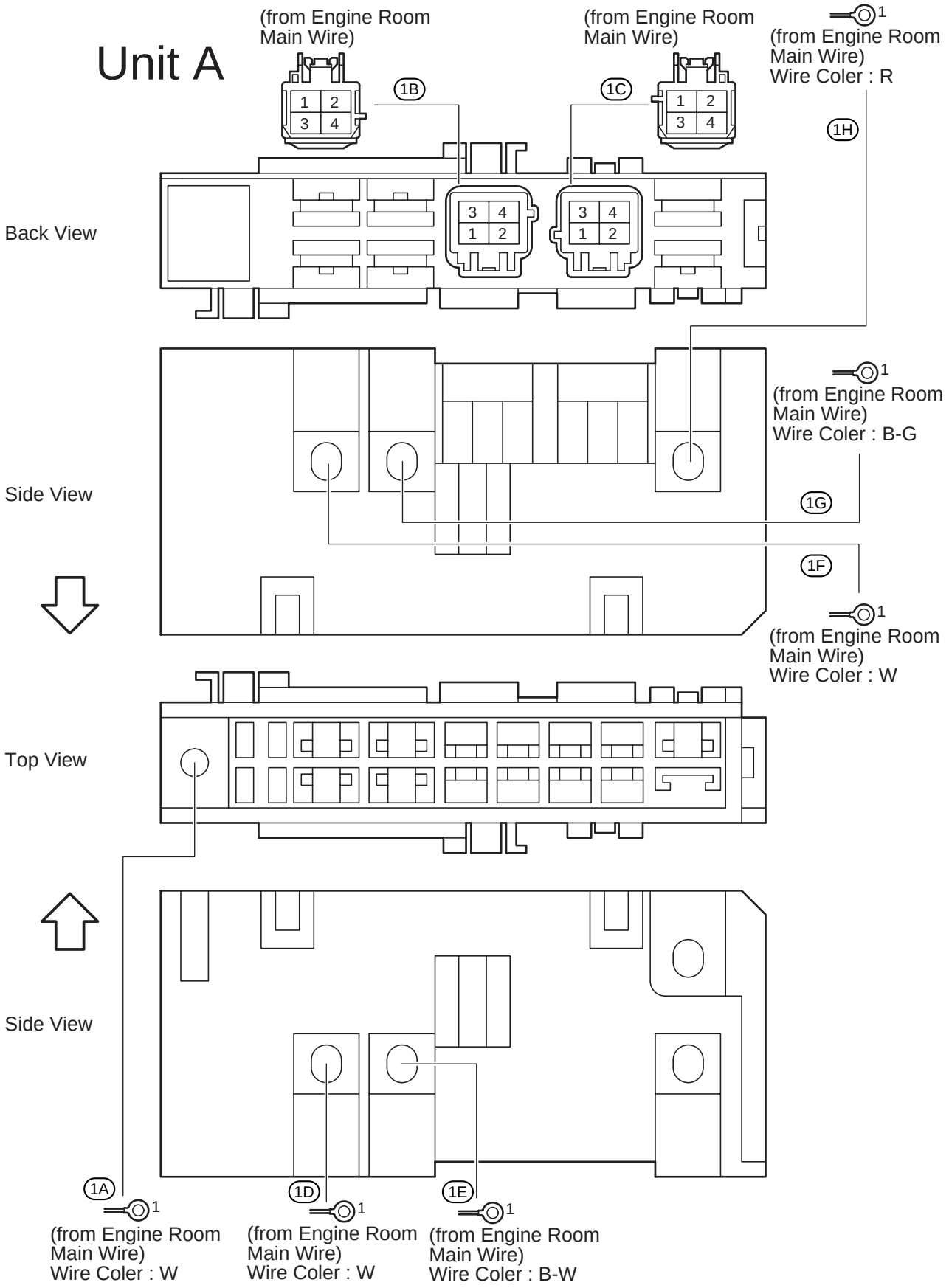

# Unit B

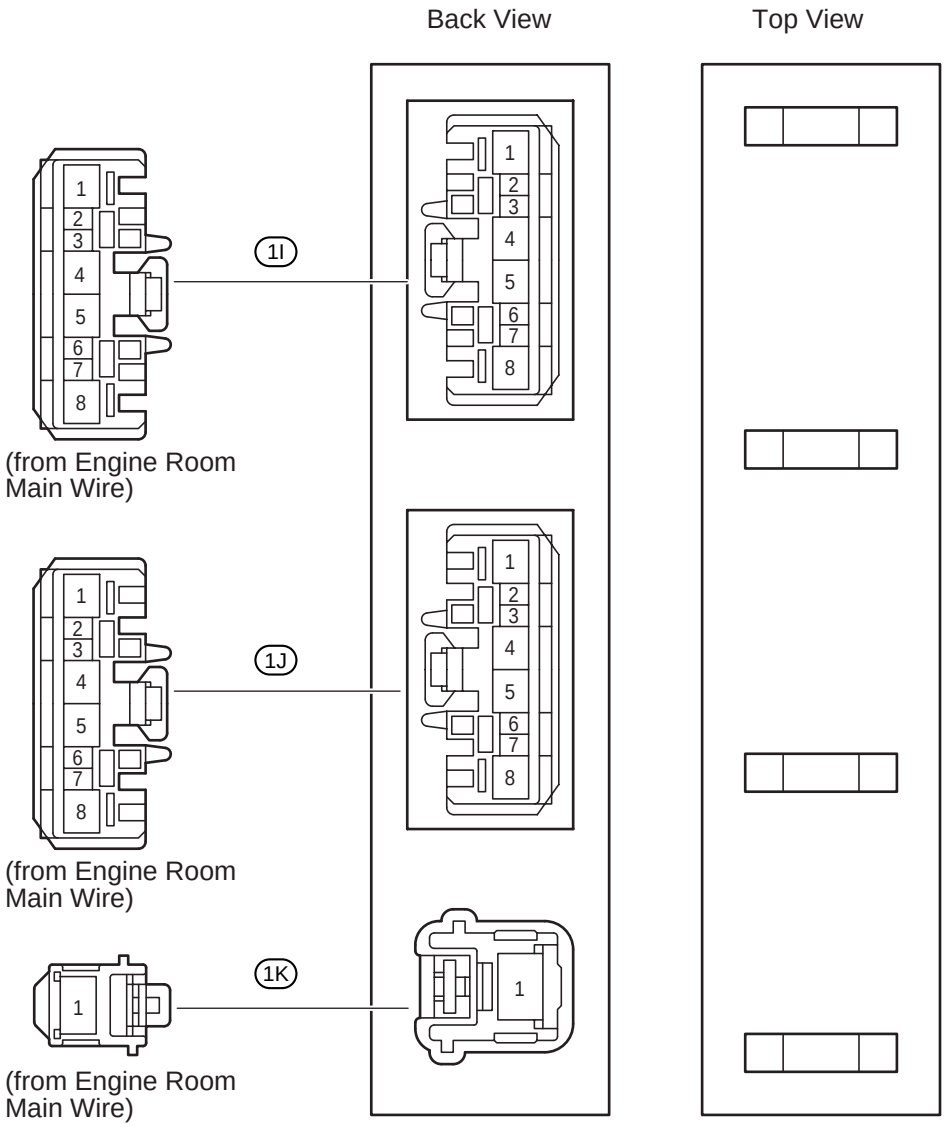
Back View
Top View
1I
1J
1K
(from Engine Room Main Wire)
(from Engine Room Main Wire)
(from Engine Room Main Wire)

## [Engine Room R/B No.1 and Engine Room J/B No.1 Inner Circuit]

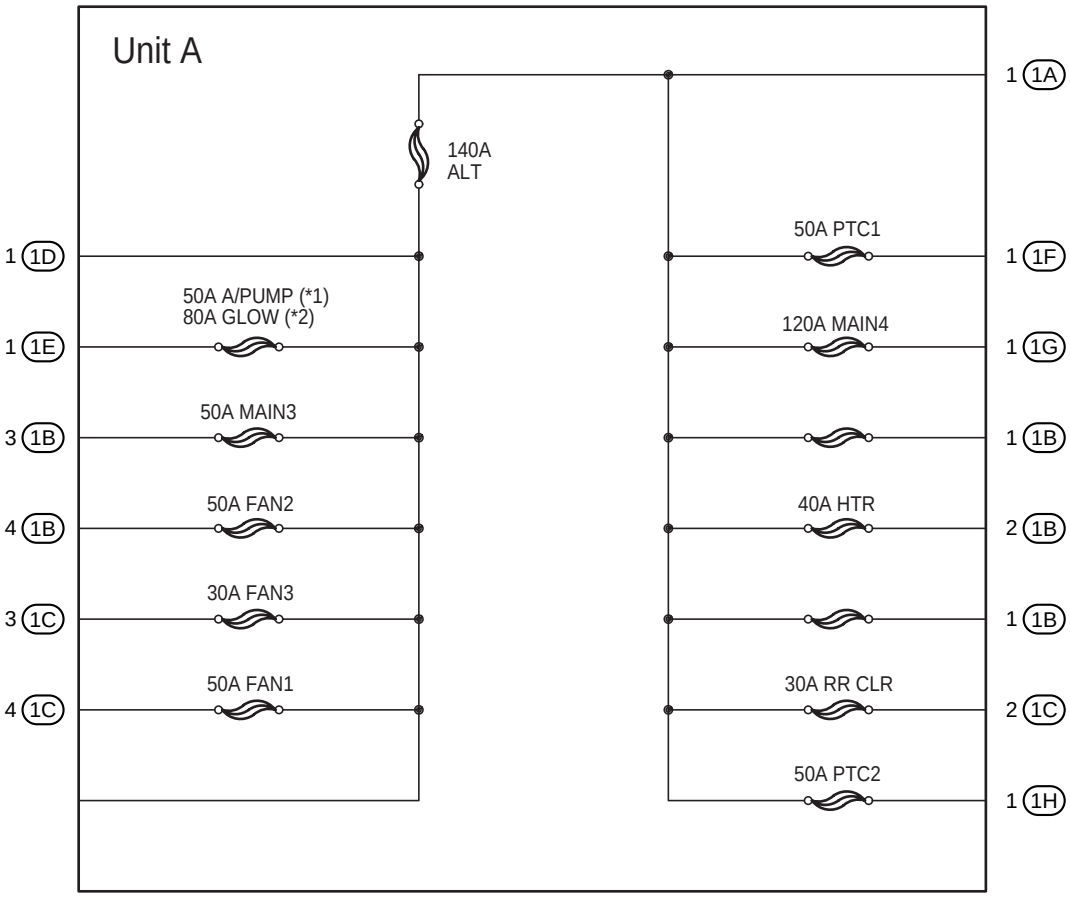


* 1:2TR-FE
* 2:2KD-FTV, 5L-E

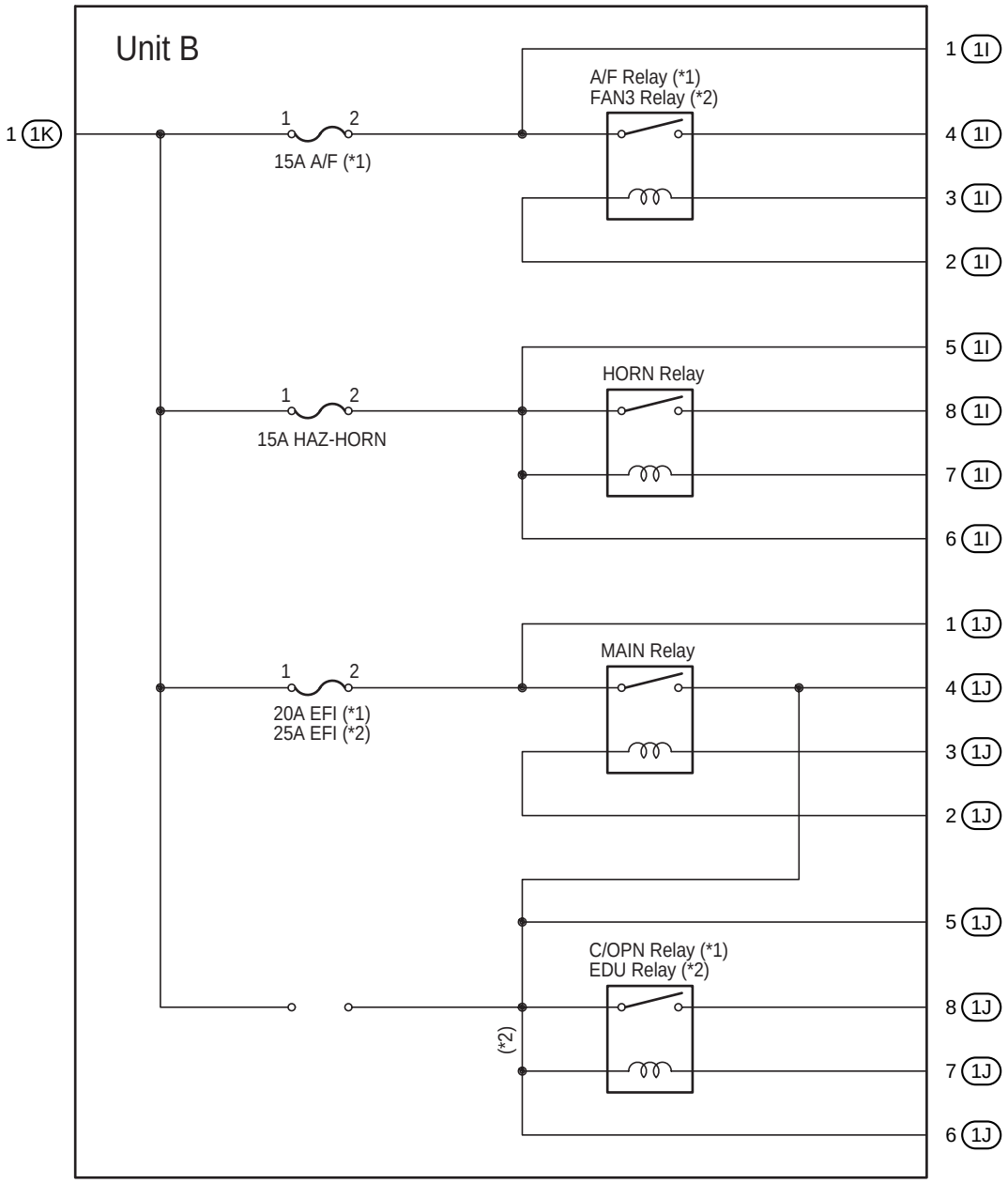


* 1:2TR-FE
* 2:2KD-FTV, 5L-E

## F RELAY LOCATIONS

| ② : Engine Room R/B No.2 | Inside of Battery Room (See Page 20) |
|---|---|

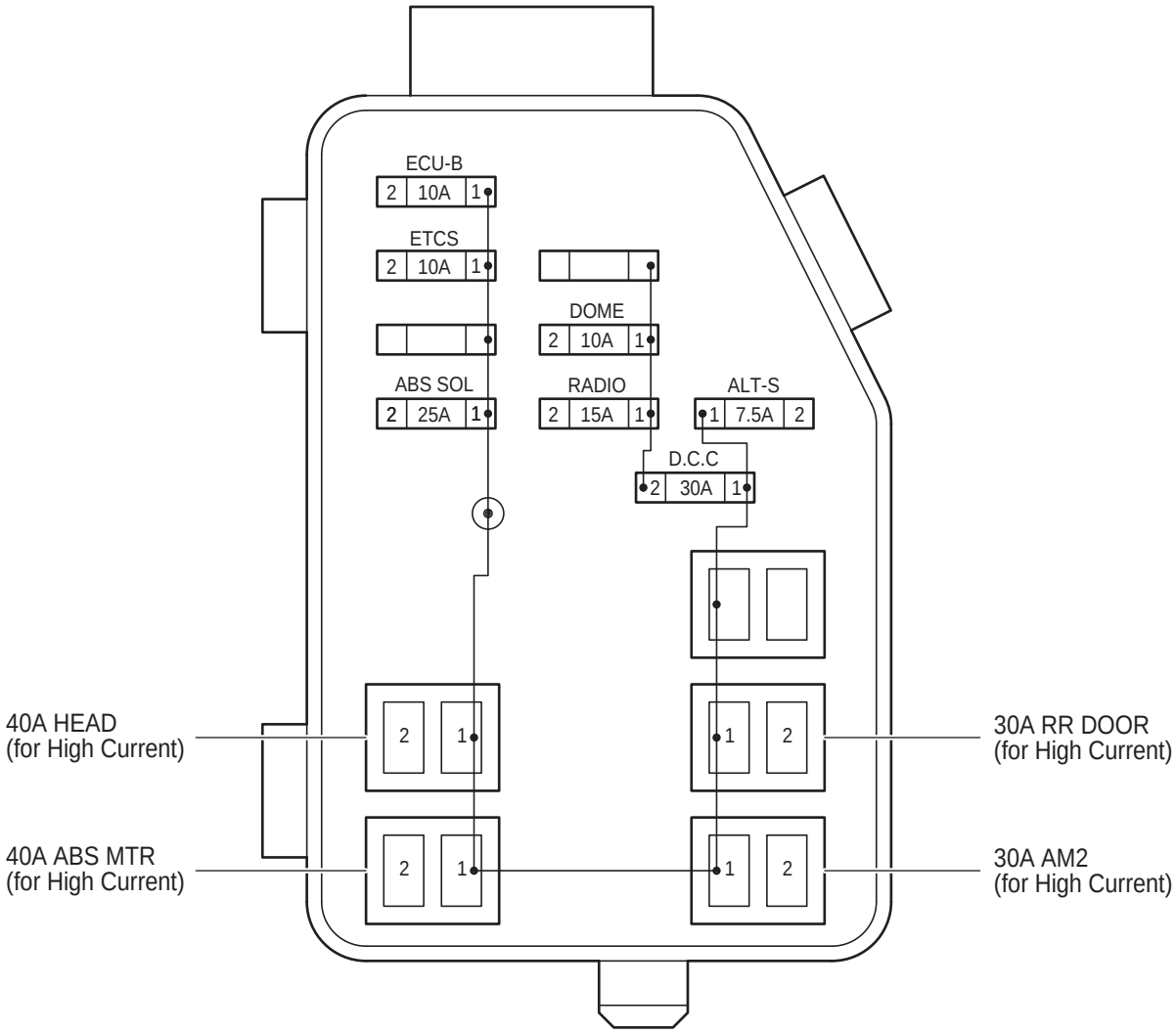

| ④ : Instrument Panel R/B | Under the Glove Box (See Page 21) |
|---|---|

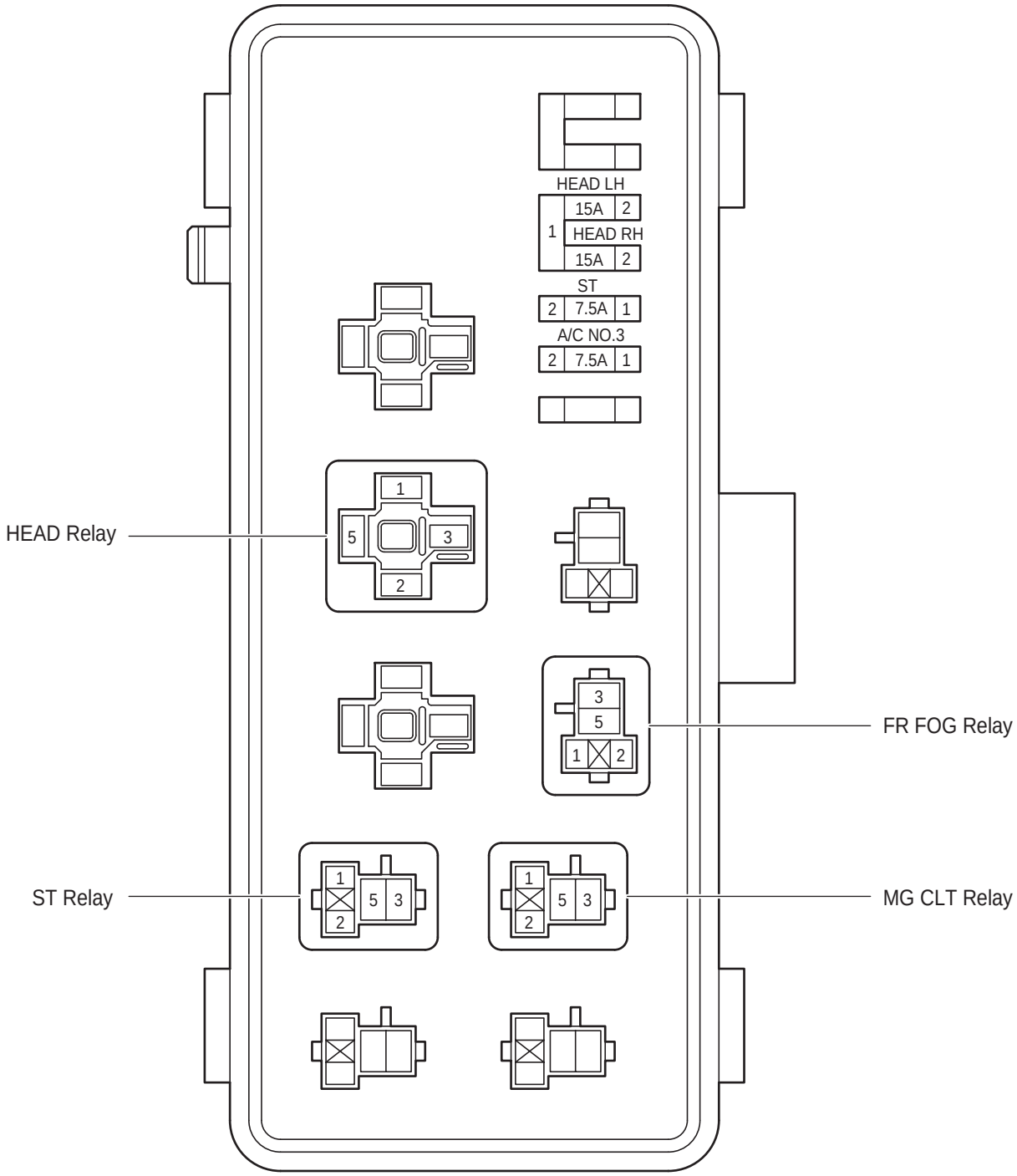

# F RELAY LOCATIONS

| : Instrument Panel J/B | Left Side of Instrument Panel (See Page 21) |
|---|---|

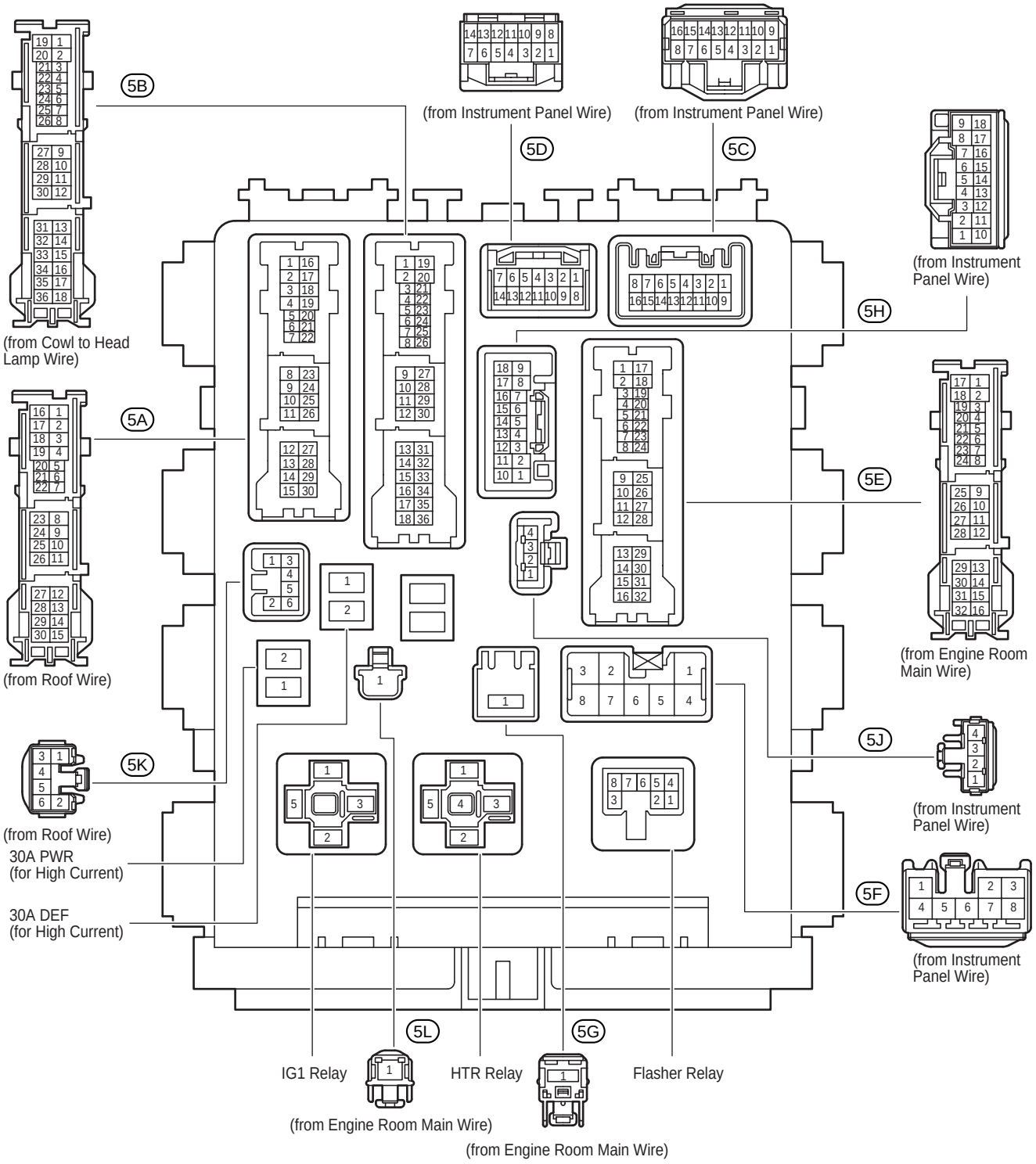

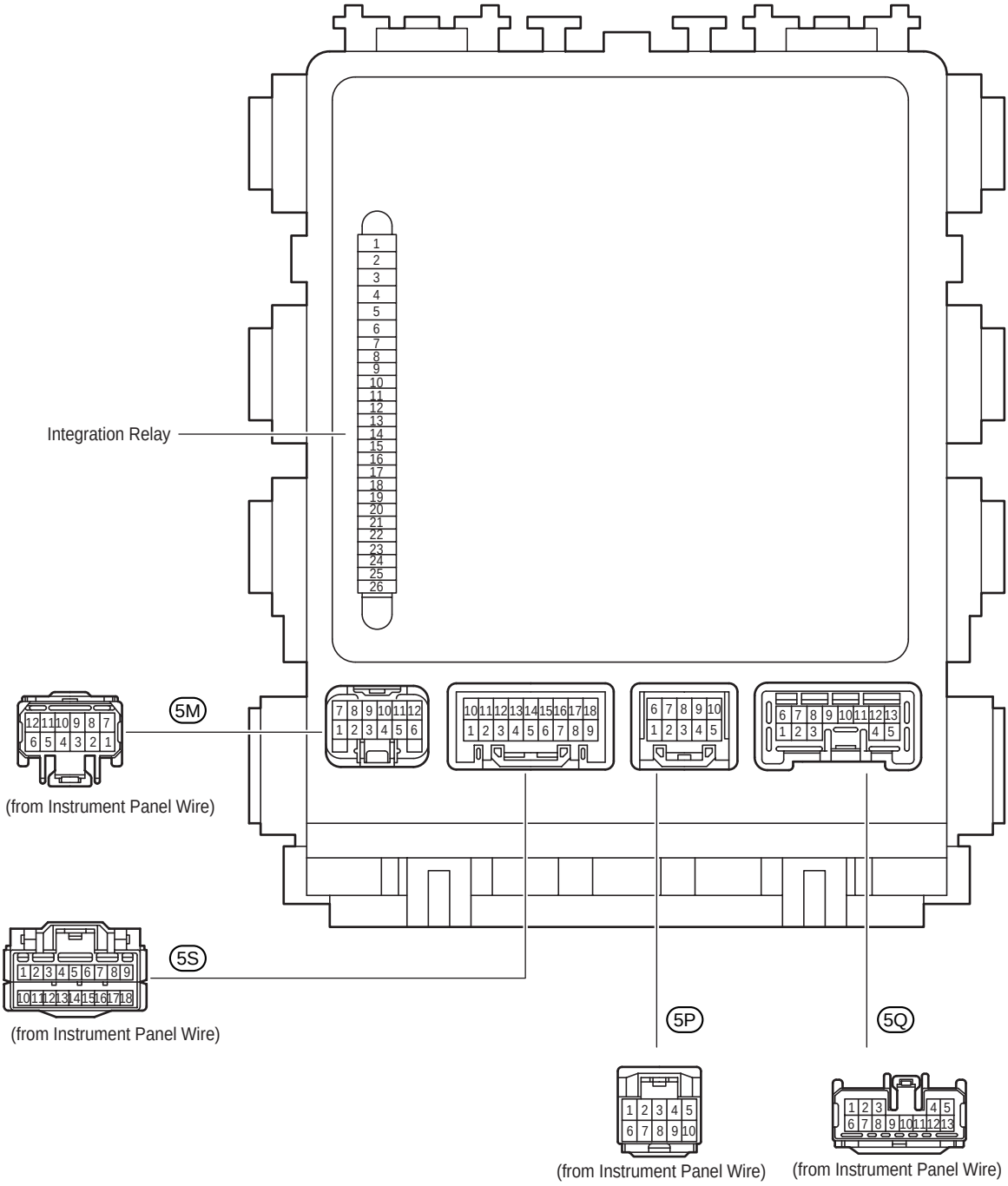
Integration Relay
5M
(from Instrument Panel Wire)
5S
(from Instrument Panel Wire)
5P
(from Instrument Panel Wire)
5Q
(from Instrument Panel Wire)

## F RELAY LOCATIONS

| : Instrument Panel J/B | Left Side of Instrument Panel (See Page 21) |
|---|---|

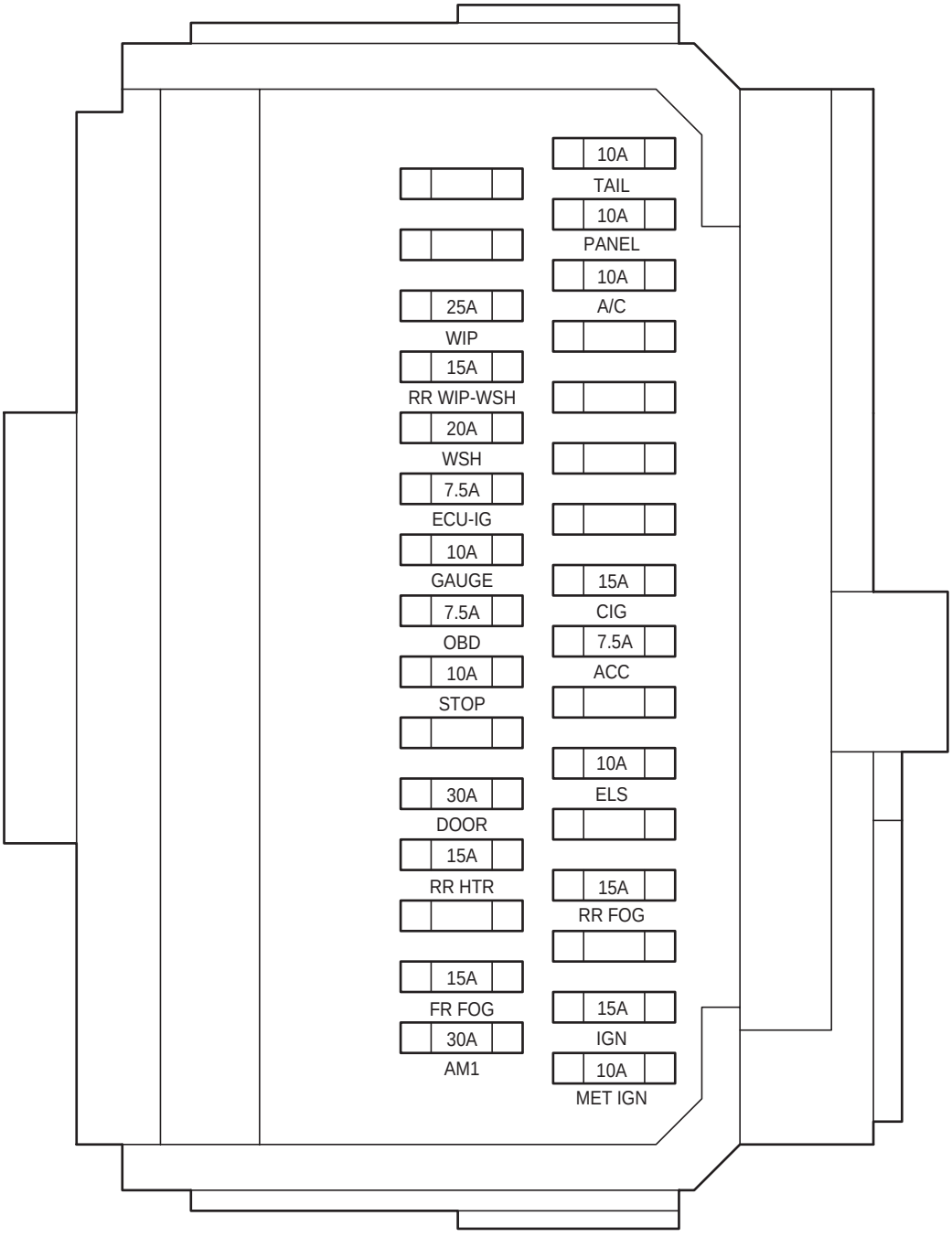

## [Instrument Panel J/B Inner Circuit]

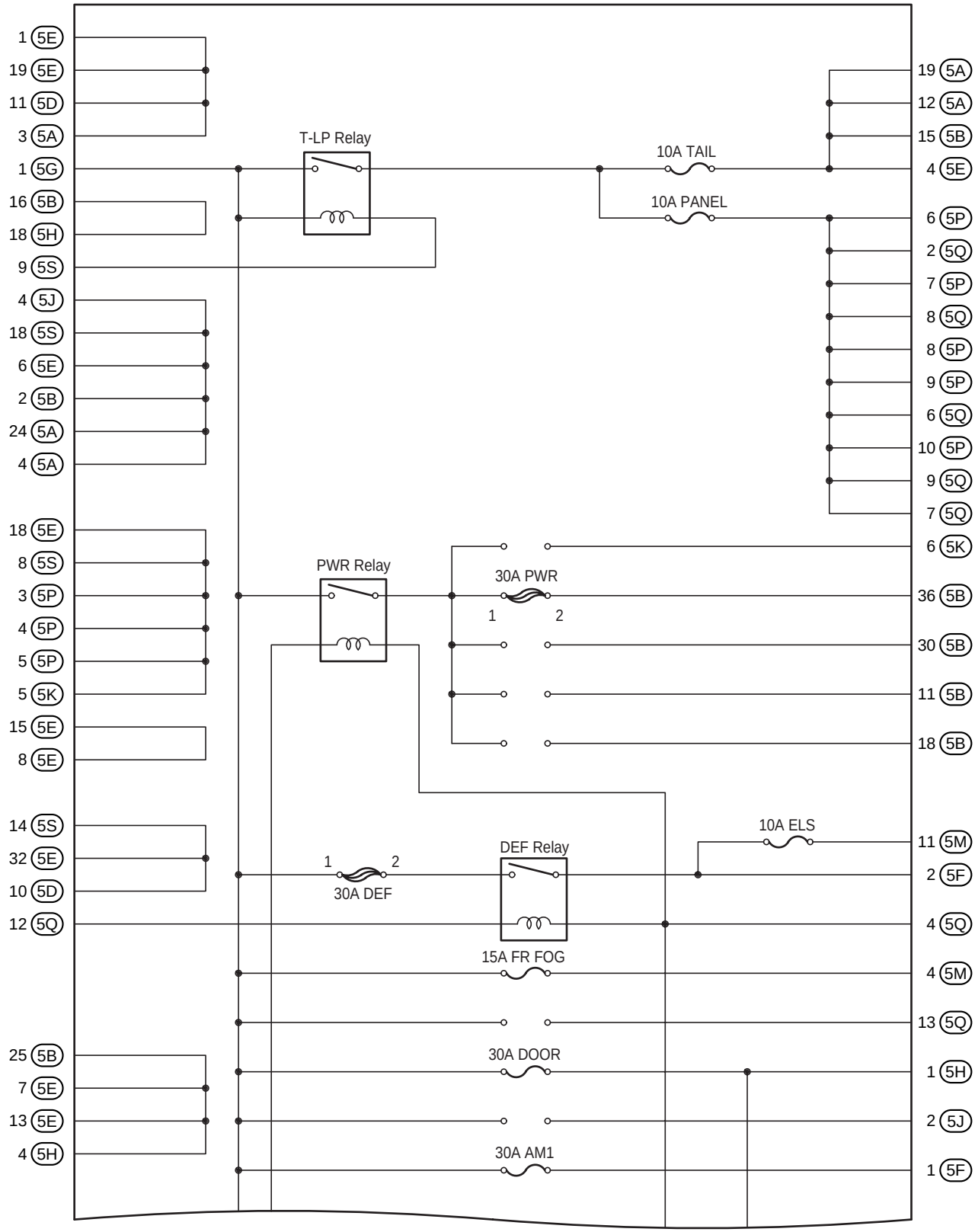


(Cont. Next Page)

(Cont'd)

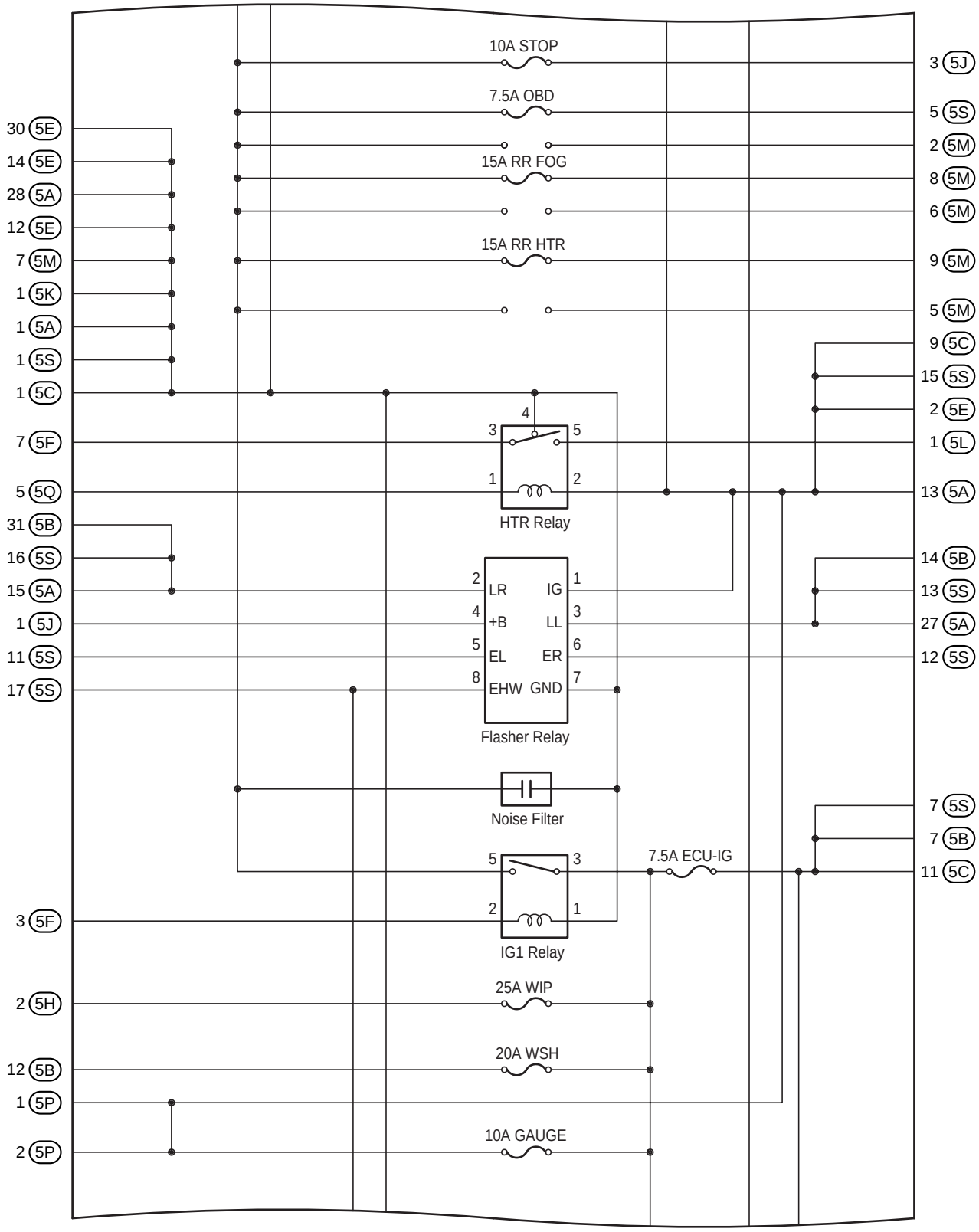


(Cont. Next Page)

## [Instrument Panel J/B Inner Circuit]

(Cont'd)

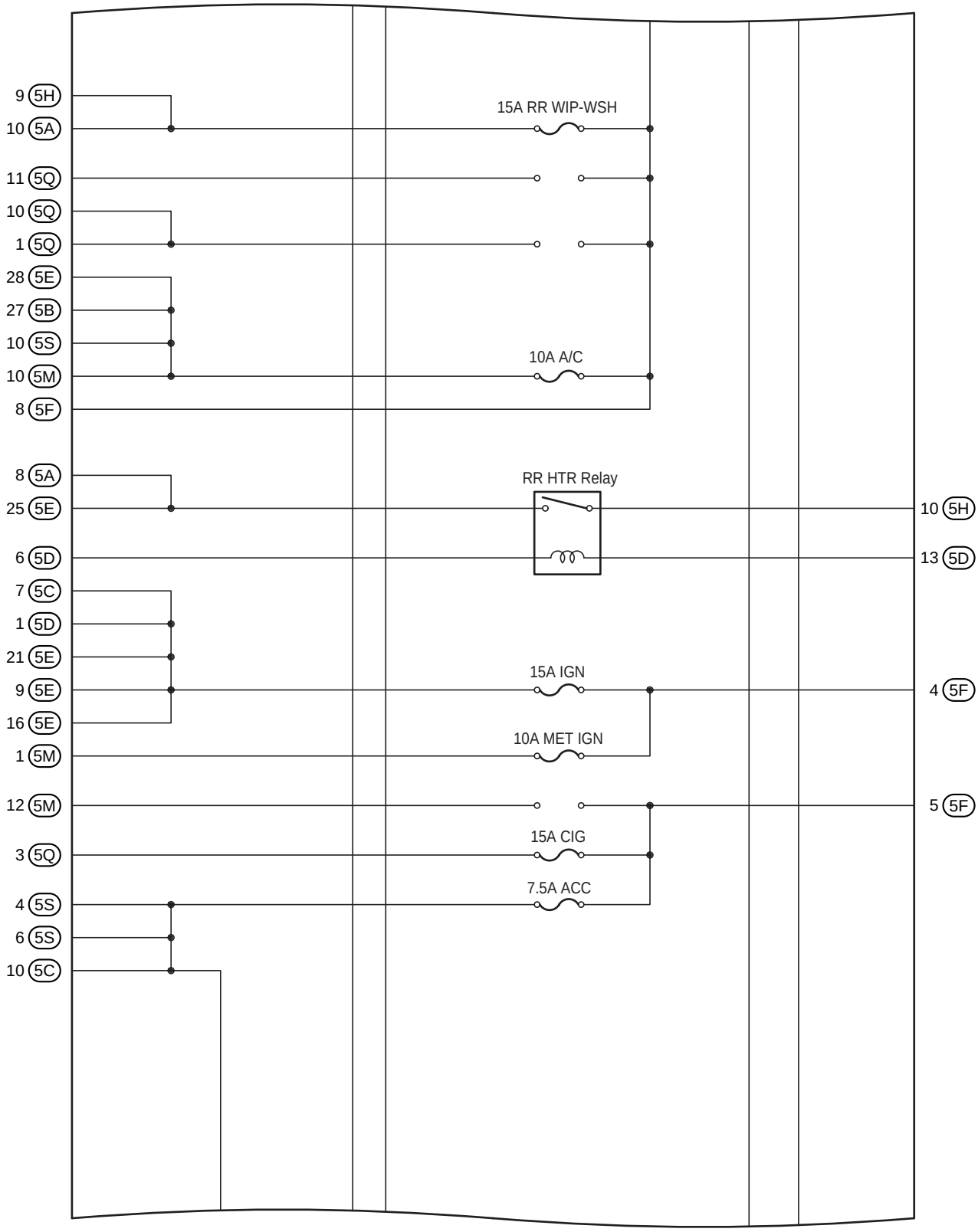


(Cont. Next Page)

(Cont'd)

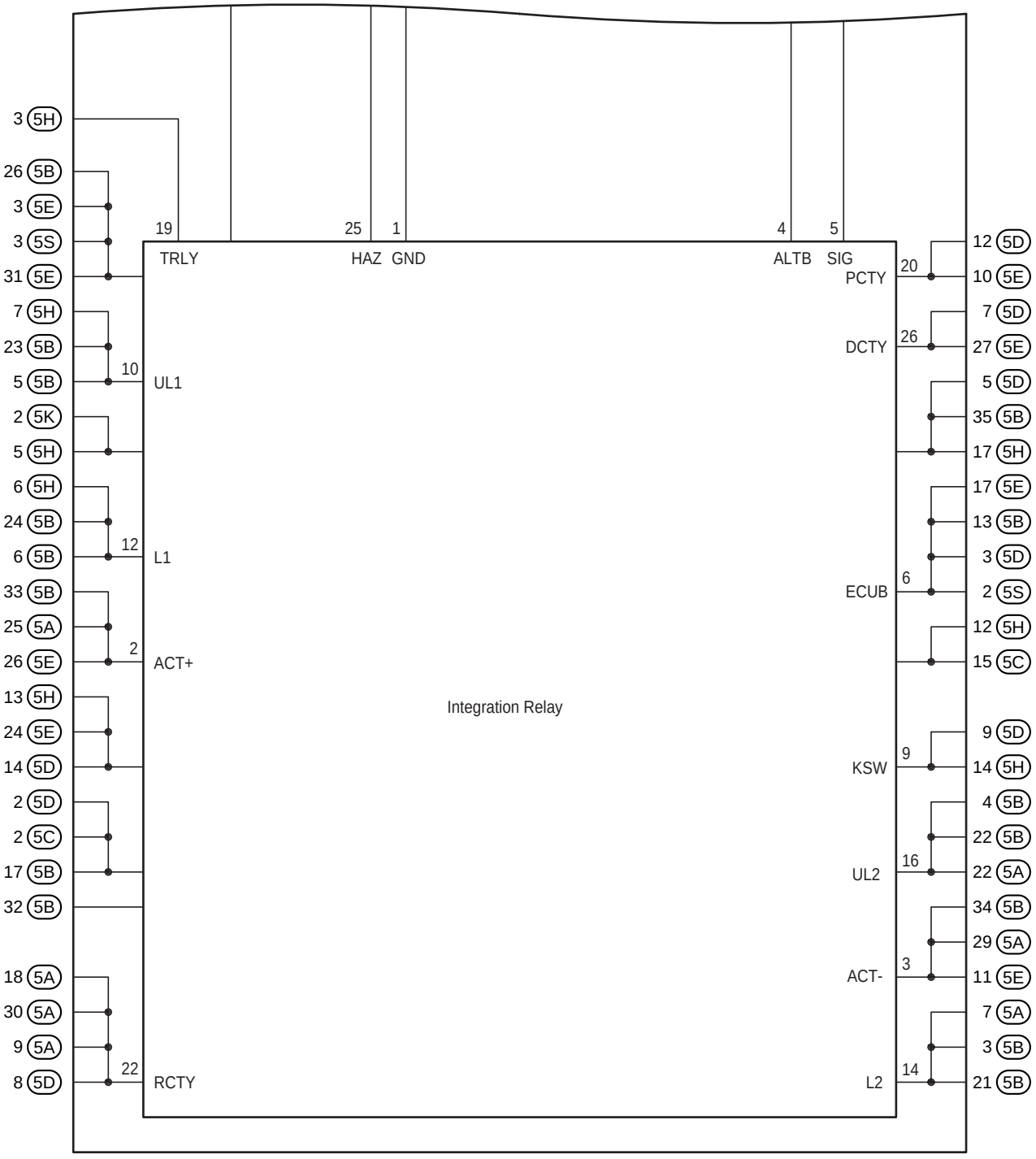
3 5H
26 5B
3 5E
3 5S
31 5E
7 5H
23 5B
5 5B
2 5K
5 5H
6 5H
24 5B
6 5B
33 5B
25 5A
26 5E
13 5H
24 5E
14 5D
2 5D
2 5C
17 5B
32 5B
18 5A
30 5A
9 5A
8 5D
19 TRLY
25 HAZ
1 GND
4 ALTB
5 SIG
10 UL1
12 L1
2 ACT+
22 RCTY
Integration Relay
20 PCTY
26 DCTY
6 ECUB
9 KSW
16 UL2
3 ACT-
14 L2
12 5D
10 5E
7 5D
27 5E
5 5D
35 5B
17 5H
17 5E
13 5B
3 5D
2 5S
12 5H
15 5C
9 5D
14 5H
4 5B
22 5B
22 5A
34 5B
29 5A
11 5E
7 5A
3 5B
21 5B

## F RELAY LOCATIONS

| : Center J/B | LHD : Instrument Panel Reinforcement LH (See Page 21) |
|---|---|
| | RHD : Instrument Panel Reinforcement RH (See Page 21) |

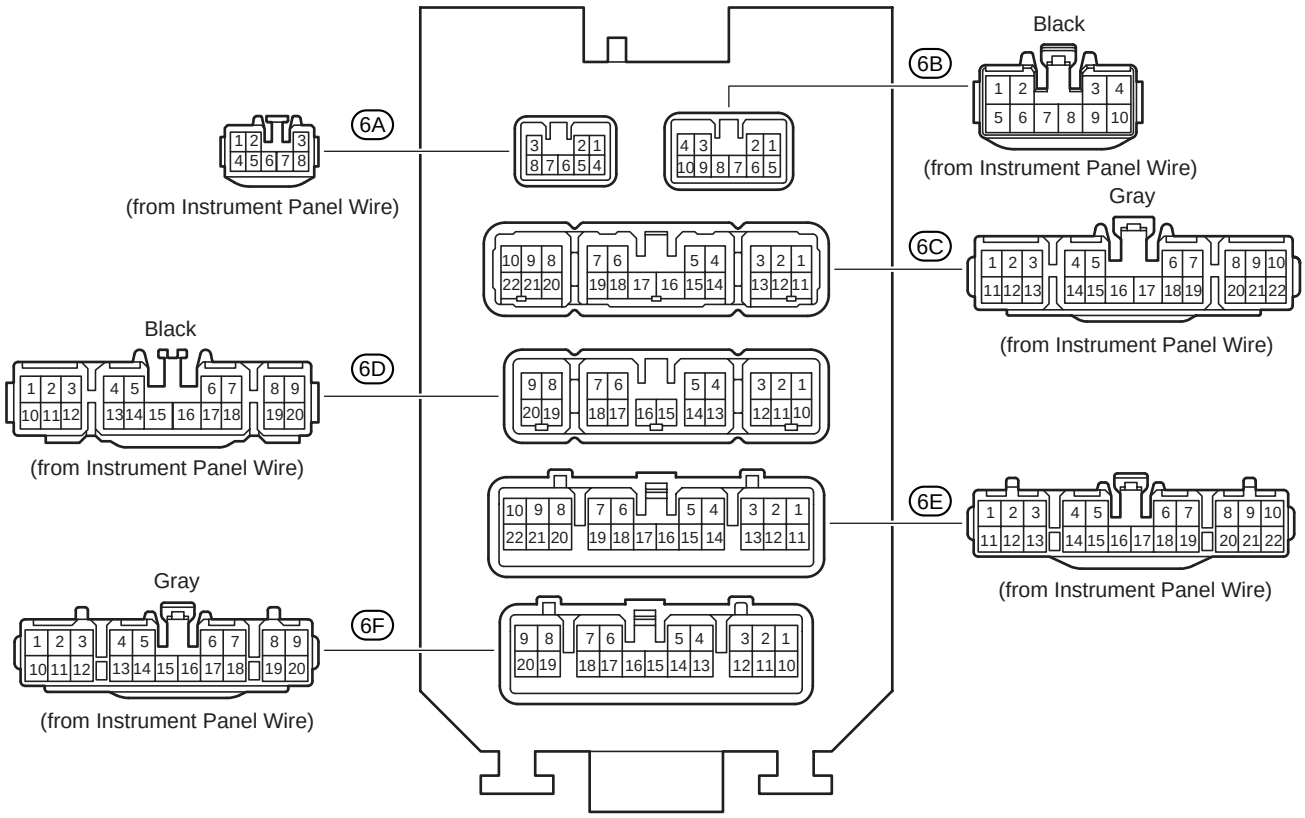

## [Center J/B Inner Circuit]

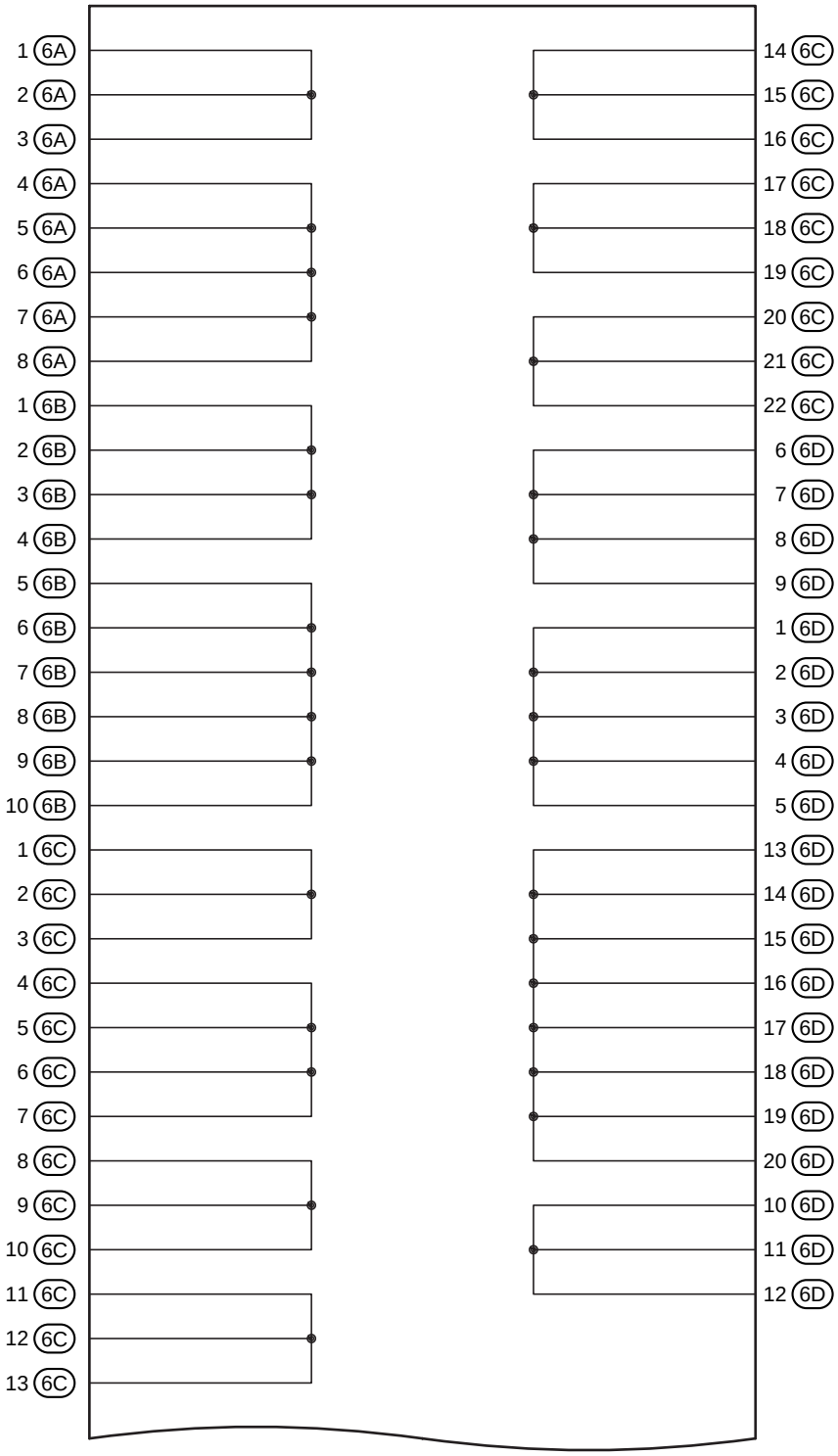


(Cont. Next Page)

(Cont'd)

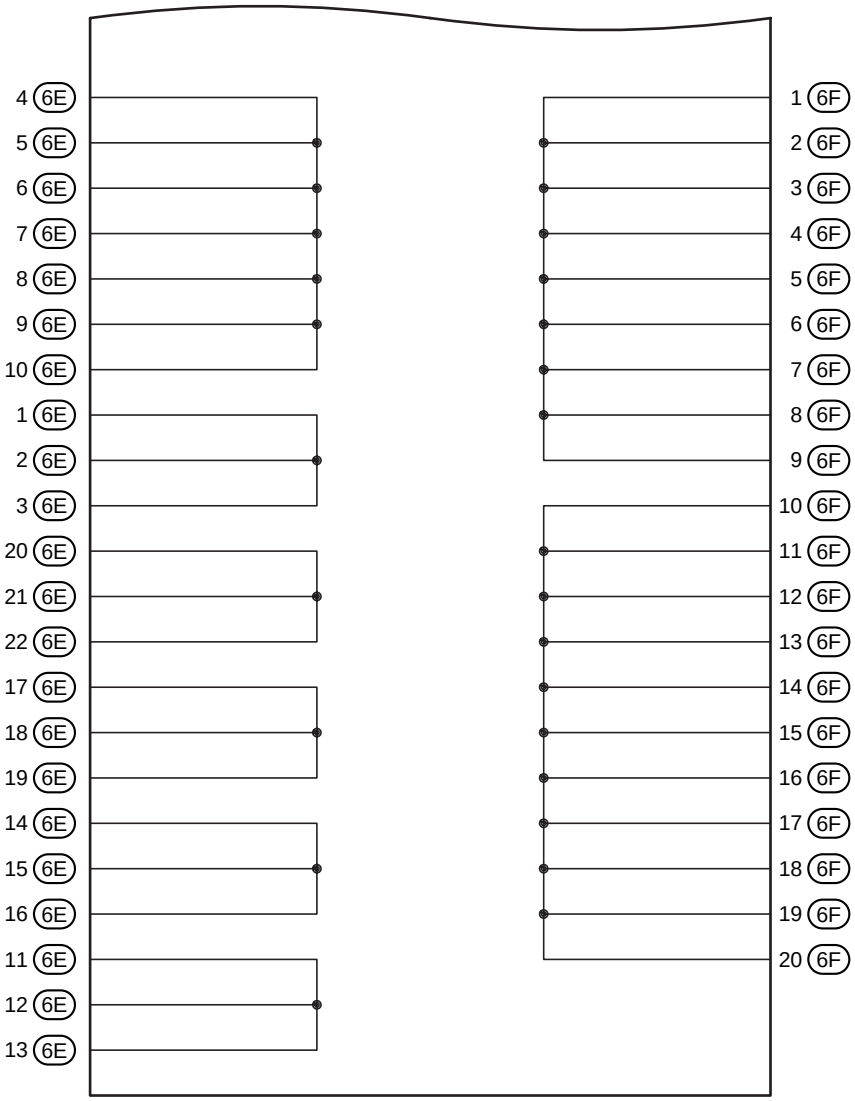
4 6E
5 6E
6 6E
7 6E
8 6E
9 6E
10 6E
1 6E
2 6E
3 6E
20 6E
21 6E
22 6E
17 6E
18 6E
19 6E
14 6E
15 6E
16 6E
11 6E
12 6E
13 6E
1 6F
2 6F
3 6F
4 6F
5 6F
6 6F
7 6F
8 6F
9 6F
10 6F
11 6F
12 6F
13 6F
14 6F
15 6F
16 6F
17 6F
18 6F
19 6F
20 6F

## F RELAY LOCATIONS

| Junction Connector | Instrument Panel J/B RH Side (See Page 21) |
|---|---|

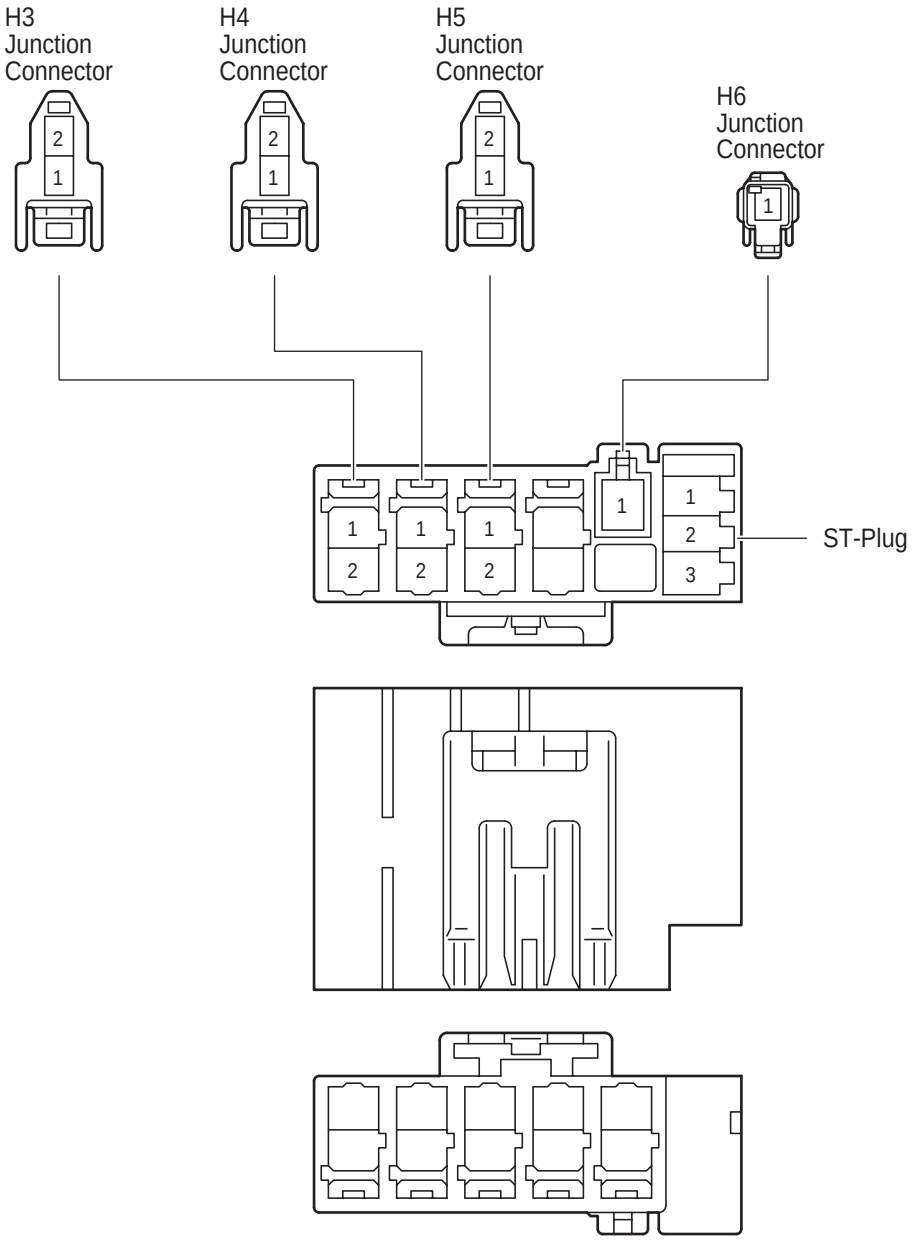

## [Junction Connector Inner Circuit]

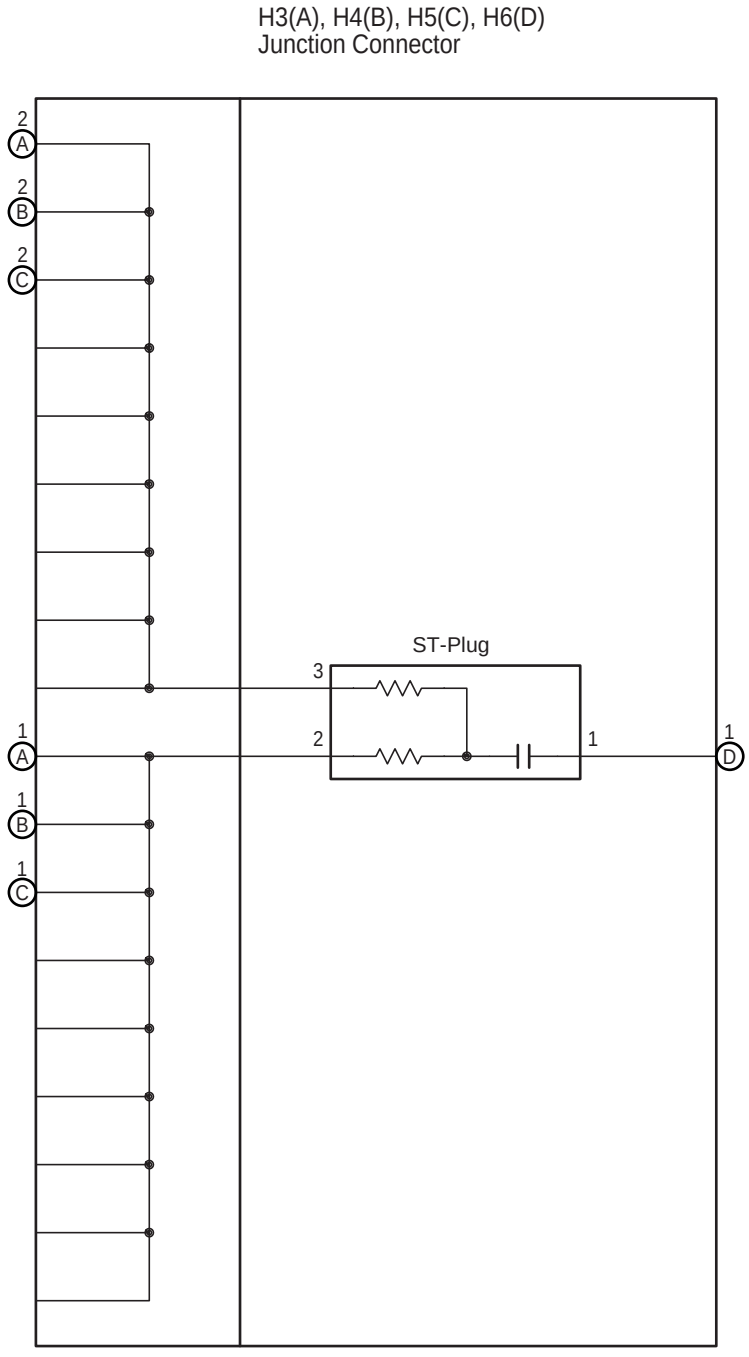

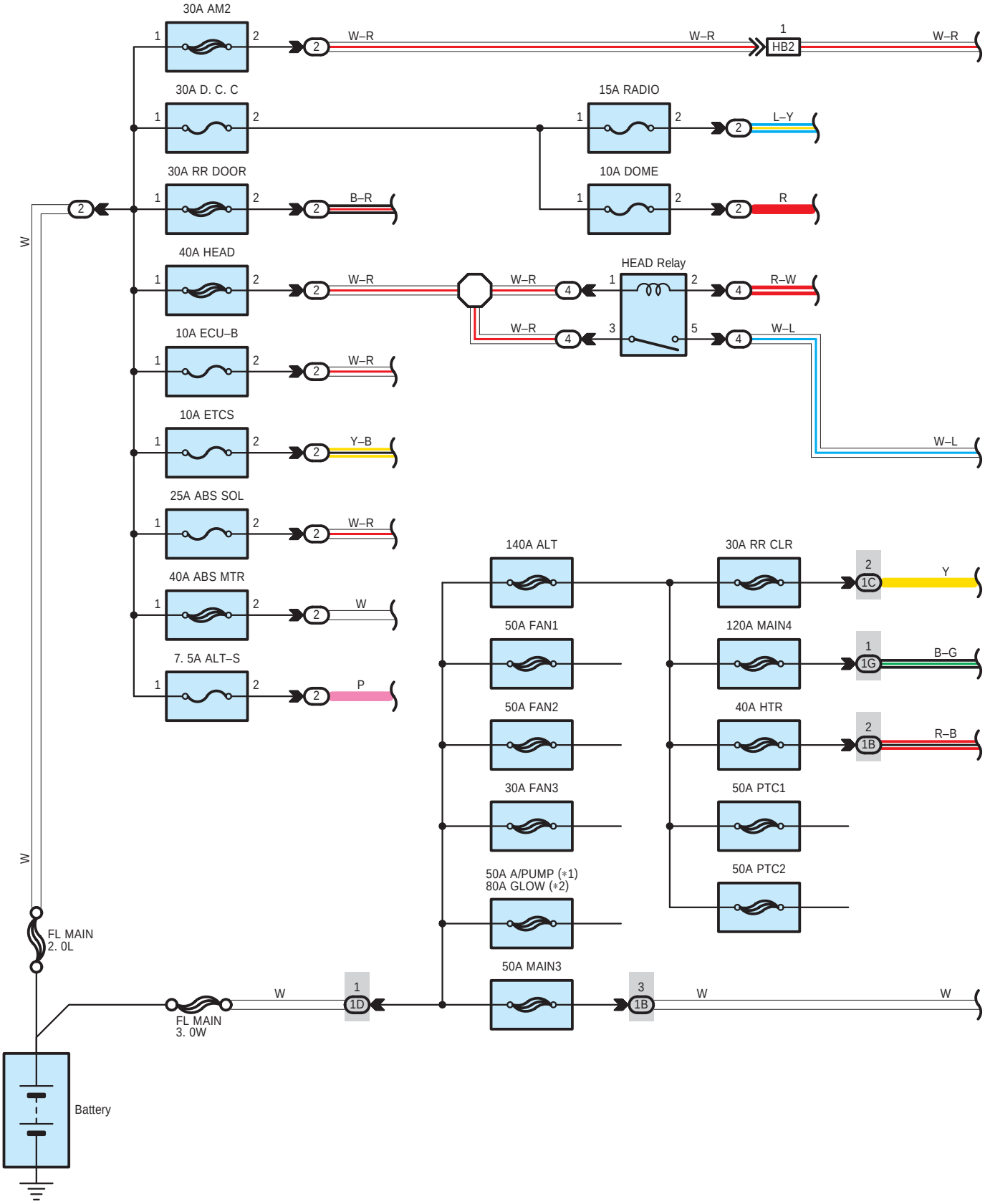
30A AM2
30A D. C. C
30A RR DOOR
40A HEAD
10A ECU–B
10A ETCS
25A ABS SOL
40A ABS MTR
7. 5A ALT–S
15A RADIO
10A DOME
HEAD Relay
140A ALT
50A FAN1
50A FAN2
30A FAN3
50A A/PUMP (*1)
80A GLOW (*2)
50A MAIN3
30A RR CLR
120A MAIN4
40A HTR
50A PTC1
50A PTC2
W–R
B–R
L–Y
R
R–W
W–L
Y–B
W
P
Y
B–G
R–B
W
FL MAIN
2. 0L
FL MAIN
3. 0W
Battery
HB2
1C
1G
1B
1D

∗ 1 : 2TR–FE
∗ 2 : 2KD–FTV, 5L–E

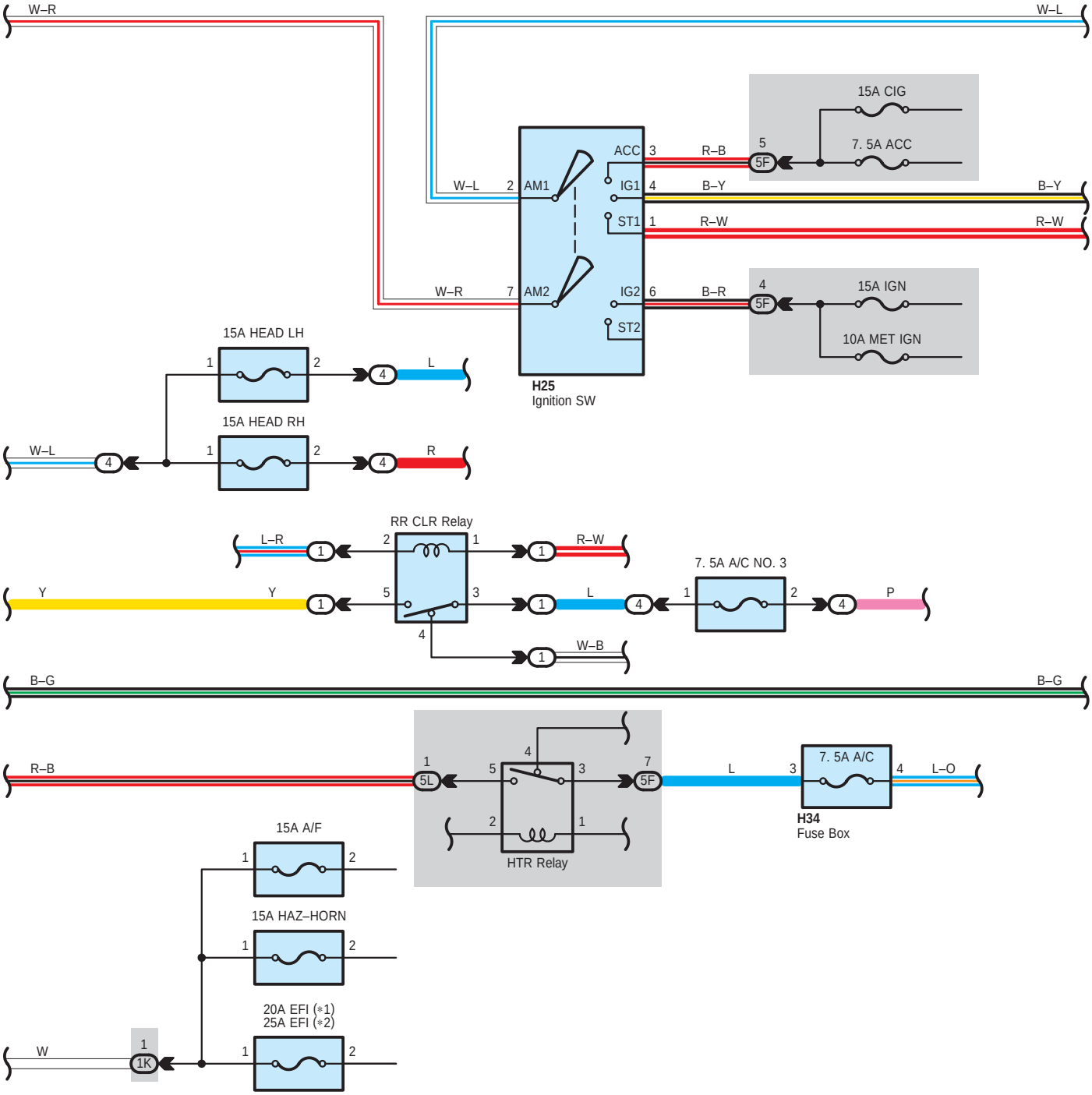

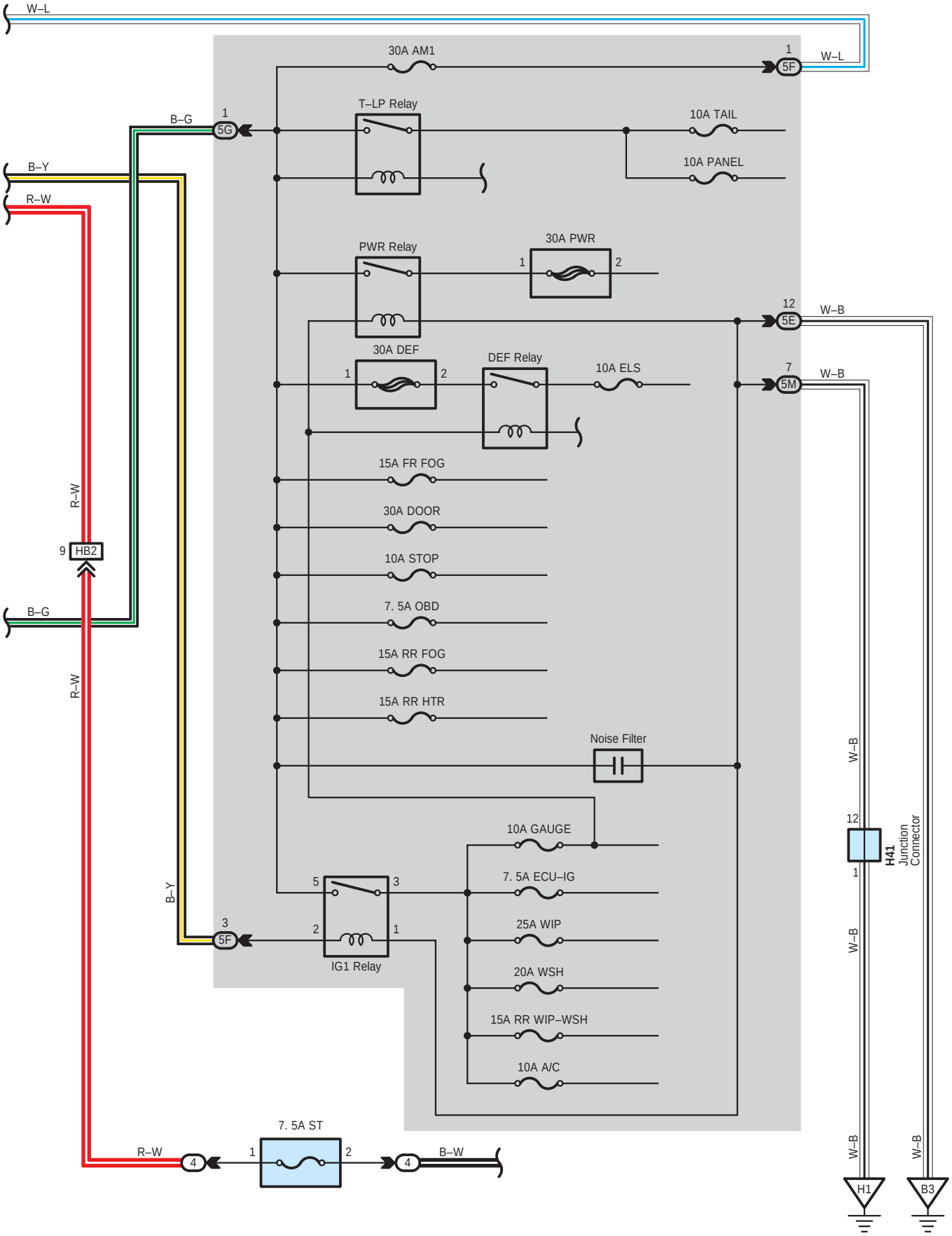
W–L
30A AM1
1
5F
W–L
B–G
1
5G
T–LP Relay
10A TAIL
10A PANEL
B–Y
R–W
PWR Relay
30A PWR
1
2
12
5E
W–B
30A DEF
1
2
DEF Relay
10A ELS
7
5M
W–B
R–W
15A FR FOG
30A DOOR
9
HB2
10A STOP
7. 5A OBD
B–G
15A RR FOG
15A RR HTR
R–W
Noise Filter
W–B
10A GAUGE
12
H41
Junction
Connector
1
7. 5A ECU–IG
5
3
B–Y
3
5F
2
1
IG1 Relay
25A WIP
W–B
20A WSH
15A RR WIP–WSH
10A A/C
7. 5A ST
R–W
4
1
2
4
B–W
W–B
W–B
H1
B3

### : Parts Location

| Code | See Page | Code | See Page | Code | See Page |
|---|---|---|---|---|---|
| H25 | 49 (LHD) | H34 | 49 (LHD) | H41 | 49 (LHD) |
| | 57 (RHD) | | 57 (RHD) | | 57 (RHD) |

### : Relay Blocks

| Code | See Page | Relay Blocks (Relay Block Location) |
|---|---|---|
| 1 | 22 (*7) | Engine Room R/B No.1 (Engine Compartment Front) |
| | 23 (*8) | |
| 2 | 28 | Engine Room R/B No.2 (Inside of Battery Room) |
| 4 | 29 | Instrument Panel R/B (Under the Glove Box) |

### : Junction Block and Wire Harness Connector

| Code | See Page | Junction Block and Wire Harness (Connector Location) |
|---|---|---|
| 1B | 24 | Engine Room Main Wire and Engine Room J/B No.1 (Engine Compartment Front) |
| 1C | | |
| 1D | | |
| 1G | | |
| 1K | 25 | |
| 5E | 30 | Engine Room Main Wire and Instrument Panel J/B (Left Side of Instrument Panel) |
| 5F | 30 | Instrument Panel Wire and Instrument Panel J/B (Left Side of Instrument Panel) |
| 5G | 30 | Engine Room Main Wire and Instrument Panel J/B (Left Side of Instrument Panel) |
| 5L | | |
| 5M | 31 | Instrument Panel Wire and Instrument Panel J/B (Left Side of Instrument Panel) |

### : Connector Joining Wire Harness and Wire Harness

| Code | See Page | Joining Wire Harness and Wire Harness (Connector Location) |
|---|---|---|
| HB2 | 64 (LHD) | Instrument Panel Wire and Engine Room Main Wire (Under the Instrument Panel J/B) |
| | 72 (RHD) | |

### : Ground Points

| Code | See Page | Ground Points Location |
|---|---|---|
| B3 | 60 (*1) | Front Floor Panel Left |
| | 61 (*2) | |
| | 62 (*3) | |
| | 68 (*4) | |
| | 69 (*5) | |
| | 70 (*6) | |
| H1 | 64 (LHD) | Instrument Panel Reinforcement |
| | 72 (RHD) | |

* 1 : LHD 2TR–FE * 2 : LHD 2KD–FTV * 3 : LHD 5L–E * 4 : RHD 2TR–FE * 5 : RHD 2KD–FTV * 6 : RHD 5L–E * 7 : 2TR–FE
* 8 : 2KD–FTV, 5L–E

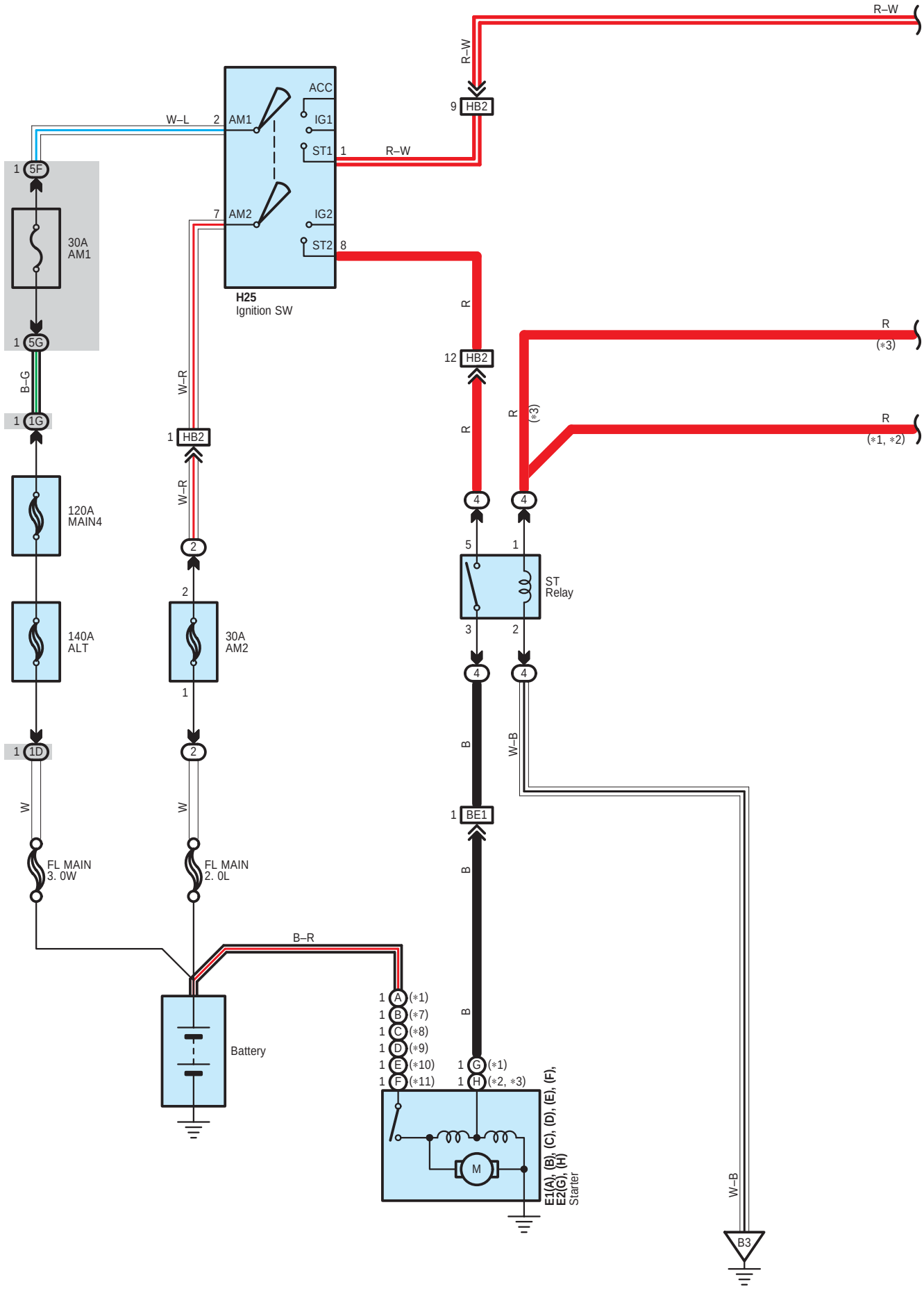
R–W
R–W
9 HB2
ACC
IG1
ST1 1
R–W
W–L
2 AM1
7 AM2
IG2
ST2 8
H25
Ignition SW
1 5F
30A
AM1
1 5G
B–G
1 1G
120A
MAIN4
140A
ALT
1 1D
W
FL MAIN
3. 0W
W–R
1 HB2
W–R
2
2
30A
AM2
1
2
W
FL MAIN
2. 0L
B–R
Battery
R
12 HB2
R
R
(*3)
R
(*1, *2)
R
(*3)
4
4
5
1
ST
Relay
3
2
4
4
B
W–B
1 BE1
B
B
1 A (*1)
1 B (*7)
1 C (*8)
1 D (*9)
1 E (*10)
1 F (*11)
1 G (*1)
1 H (*2, *3)
M
E1(A), (B), (C), (D), (E), (F),
E2(G), (H)
Starter
W–B
B3

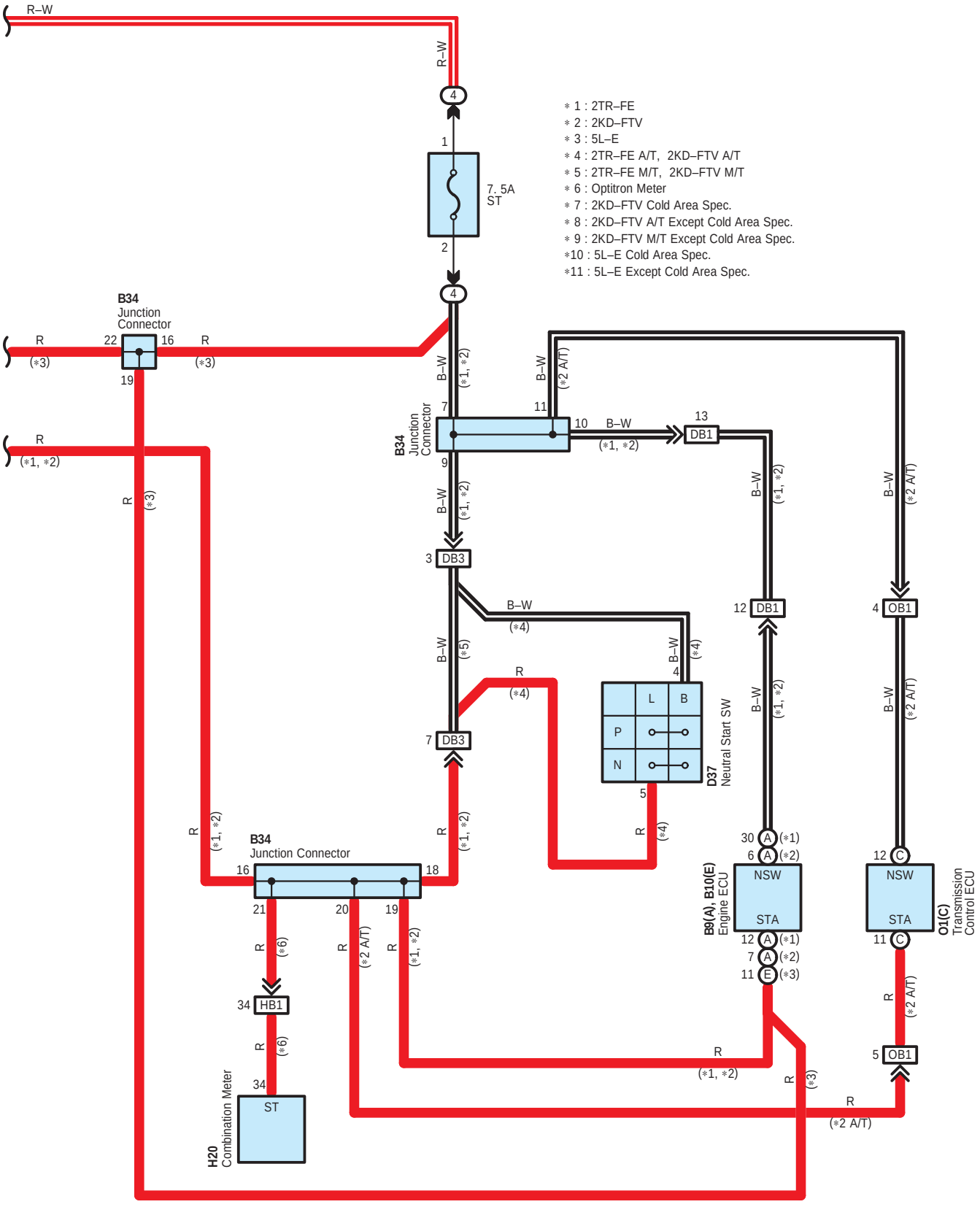
R–W
R–W
4
1
7. 5A
ST
2
4
∗ 1 : 2TR–FE
∗ 2 : 2KD–FTV
∗ 3 : 5L–E
∗ 4 : 2TR–FE A/T, 2KD–FTV A/T
∗ 5 : 2TR–FE M/T, 2KD–FTV M/T
∗ 6 : Optitron Meter
∗ 7 : 2KD–FTV Cold Area Spec.
∗ 8 : 2KD–FTV A/T Except Cold Area Spec.
∗ 9 : 2KD–FTV M/T Except Cold Area Spec.
∗10 : 5L–E Cold Area Spec.
∗11 : 5L–E Except Cold Area Spec.
B34
Junction
Connector
R
(∗3)
22
16
R
(∗3)
19
R
(∗1, ∗2)
R
(∗3)
B34
Junction
Connector
7
11
10
B–W
(∗1, ∗2)
13
DB1
B–W
(∗1, ∗2)
B–W
(∗2 A/T)
9
B–W
(∗1, ∗2)
3
DB3
B–W
(∗4)
B–W
(∗5)
B–W
(∗4)
12
DB1
B–W
(∗1, ∗2)
4
OB1
B–W
(∗2 A/T)
R
(∗4)
7
DB3
L
B
P
N
4
5
D37
Neutral Start SW
R
(∗4)
R
(∗1, ∗2)
B34
Junction Connector
16
18
21
20
19
R
(∗6)
R
(∗2 A/T)
R
(∗1, ∗2)
30
A
(∗1)
6
A
(∗2)
NSW
STA
12
A
(∗1)
7
A
(∗2)
11
E
(∗3)
B9(A), B10(E)
Engine ECU
12
C
NSW
STA
11
C
O1(C)
Transmission
Control ECU
R
(∗2 A/T)
34
HB1
R
(∗6)
34
ST
H20
Combination Meter
R
(∗1, ∗2)
R
(∗3)
5
OB1
R
(∗2 A/T)

### : Parts Location

| Code | | See Page | Code | | See Page | Code | | See Page |
|---|---|---|---|---|---|---|---|---|
| B9 | A | 44 (*1) | E1 | A | 44 (*1) | E2 | G | 44 (*1) |
| | | 45 (*2) | | | 52 (*4) | | | 52 (*4) |
| | | 52 (*4) | | B | 45 (*2) | | H | 45 (*2) |
| | | 53 (*5) | | | 53 (*5) | | | 46 (*3) |
| B10 | E | 46 (*3) | | C | 45 (*2) | | | 53 (*5) |
| | | 54 (*6) | | | 53 (*5) | | | 54 (*6) |
| B34 | | 48 (LHD) | | D | 45 (*2) | H20 | | 49 (LHD) |
| | | 56 (RHD) | | | 53 (*5) | | | 57 (RHD) |
| D37 | | 44 (*1) | | E | 46 (*3) | H25 | | 49 (LHD) |
| | | 45 (*2) | | | 54 (*6) | | | 57 (RHD) |
| | | 52 (*4) | | F | 46 (*3) | O1 | C | 48 (LHD) |
| | | 53 (*5) | | | 54 (*6) | | | 56 (RHD) |

### : Relay Blocks

| Code | See Page | Relay Blocks (Relay Block Location) |
|---|---|---|
| 2 | 28 | Engine Room R/B No.2 (Inside of Battery Room) |
| 4 | 29 | Instrument Panel R/B (Under the Glove Box) |

### : Junction Block and Wire Harness Connector

| Code | See Page | Junction Block and Wire Harness (Connector Location) |
|---|---|---|
| 1D | 24 | Engine Room Main Wire and Engine Room J/B No.1 (Engine Compartment Front) |
| 1G | | |
| 5F | 30 | Instrument Panel Wire and Instrument Panel J/B (Left Side of Instrument Panel) |
| 5G | 30 | Engine Room Main Wire and Instrument Panel J/B (Left Side of Instrument Panel) |

### : Connector Joining Wire Harness and Wire Harness

| Code | See Page | Joining Wire Harness and Wire Harness (Connector Location) |
|---|---|---|
| BE1 | 60 (*1) | Engine Room Main Wire and Engine No.2 Wire (LH Side Battery Room) |
| | 61 (*2) | |
| | 62 (*3) | |
| | 68 (*4) | |
| | 69 (*5) | |
| | 70 (*6) | |
| DB1 | 60 (*1) | Engine Wire and Engine Room Main Wire (Front Side of Engine Room R/B No.1) |
| | 61 (*2) | |
| | 68 (*4) | |
| | 69 (*5) | |
| DB3 | 60 (*1) | |
| | 61 (*2) | |
| | 68 (*4) | |
| | 69 (*5) | |
| HB1 | 64 (LHD) | Instrument Panel Wire and Engine Room Main Wire (Under the Instrument Panel J/B) |
| | 72 (RHD) | |
| HB2 | 64 (LHD) | |
| | 72 (RHD) | |
| OB1 | 65 (LHD) | Floor Wire and Engine Room Main Wire (RH Side of Instrument Panel R/B) |
| | 73 (RHD) | Floor Wire and Engine Room Main Wire (Near the Stop Lamp SW) |

* 1 : LHD 2TR–FE * 2 : LHD 2KD–FTV * 3 : LHD 5L–E * 4 : RHD 2TR–FE * 5 : RHD 2KD–FTV * 6 : RHD 5L–E * 7 : 2TR–FE
* 8 : 2KD–FTV, 5L–E

▽ : **Ground Points**

| Code | See Page | Ground Points Location |
|---|---|---|
| B3 | 60 (*1) | Front Floor Panel Left |
| | 61 (*2) | |
| | 62 (*3) | |
| | 68 (*4) | |
| | 69 (*5) | |
| | 70 (*6) | |

* 1 : LHD 2TR–FE * 2 : LHD 2KD–FTV * 3 : LHD 5L–E * 4 : RHD 2TR–FE * 5 : RHD 2KD–FTV * 6 : RHD 5L–E * 7 : 2TR–FE
* 8 : 2KD–FTV, 5L–E

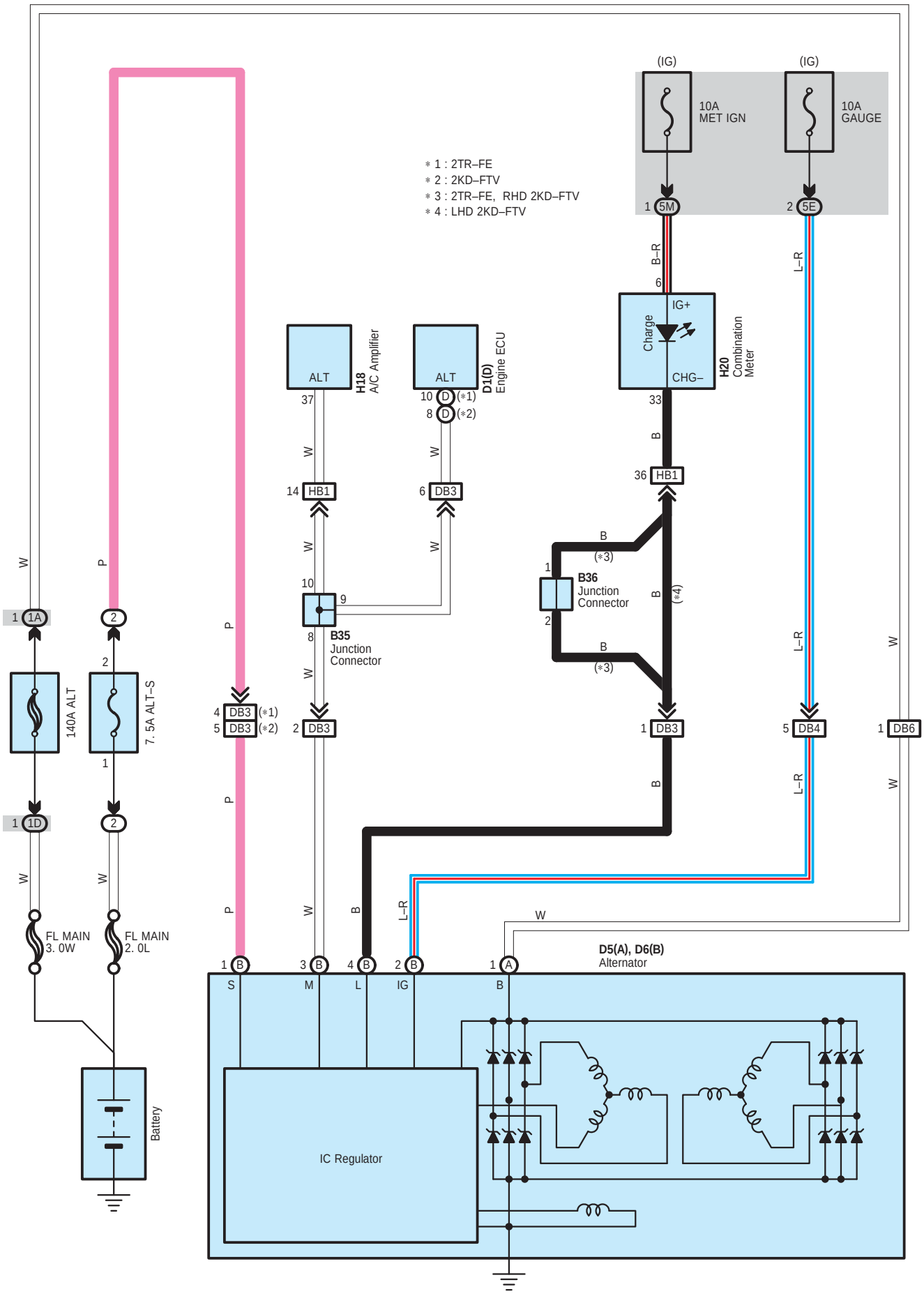
(IG)
(IG)
10A
MET IGN
10A
GAUGE
∗ 1 : 2TR–FE
∗ 2 : 2KD–FTV
∗ 3 : 2TR–FE, RHD 2KD–FTV
∗ 4 : LHD 2KD–FTV
1 5M
2 5E
B–R
L–R
6
IG+
Charge
CHG–
H20
Combination
Meter
ALT
H18
A/C Amplifier
ALT
D1(D)
Engine ECU
37
10 D (∗1)
8 D (∗2)
33
W
B
14 HB1
6 DB3
36 HB1
B
(∗3)
1
B36
Junction
Connector
2
B
(∗4)
10
9
8
B35
Junction
Connector
4 DB3 (∗1)
5 DB3 (∗2)
2 DB3
1 DB3
5 DB4
1 DB6
P
W
1 1A
2
2
1
140A ALT
7. 5A ALT–S
1 1D
2
FL MAIN
3. 0W
FL MAIN
2. 0L
Battery
1 B
S
3 B
M
4 B
L
2 B
IG
1 A
B
D5(A), D6(B)
Alternator
IC Regulator

### : Parts Location

| Code | | See Page | Code | | See Page | Code | | See Page |
|---|---|---|---|---|---|---|---|---|
| B35 | | 44 (*1) | D1 | D | 45 (*2) | D6 | B | 45 (*2) |
| | | 45 (*2) | | | 52 (*4) | | | 52 (*4) |
| | | 52 (*4) | | | 53 (*5) | | | 53 (*5) |
| | | 53 (*5) | D5 | A | 44 (*1) | H18 | | 49 (LHD) |
| B36 | | 44 (*1) | | | 45 (*2) | | | 57 (RHD) |
| | | 52 (*4) | | | 52 (*4) | H20 | | 49 (LHD) |
| | | 53 (*5) | | | 53 (*5) | | | 57 (RHD) |
| D1 | D | 44 (*1) | D6 | B | 44 (*1) | | | |

### : Relay Blocks

| Code | See Page | Relay Blocks (Relay Block Location) |
|---|---|---|
| 2 | 28 | Engine Room R/B No.2 (Inside of Battery Room) |

### : Junction Block and Wire Harness Connector

| Code | See Page | Junction Block and Wire Harness (Connector Location) |
|---|---|---|
| 1A | 24 | Engine Room Main Wire and Engine Room J/B No.1 (Engine Compartment Front) |
| 1D | | |
| 5E | 30 | Engine Room Main Wire and Instrument Panel J/B (Left Side of Instrument Panel) |
| 5M | 31 | Instrument Panel Wire and Instrument Panel J/B (Left Side of Instrument Panel) |

### : Connector Joining Wire Harness and Wire Harness

| Code | See Page | Joining Wire Harness and Wire Harness (Connector Location) |
|---|---|---|
| DB3 | 60 (*1) | Engine Wire and Engine Room Main Wire (Front Side of Engine Room R/B No.1) |
| | 61 (*2) | |
| | 68 (*4) | |
| | 69 (*5) | |
| DB4 | 60 (*1) | |
| | 61 (*2) | |
| | 68 (*4) | |
| | 69 (*5) | |
| DB6 | 60 (*1) | |
| | 61 (*2) | |
| | 68 (*4) | |
| | 69 (*5) | |
| HB1 | 64 (LHD) | Instrument Panel Wire and Engine Room Main Wire (Under the Instrument Panel J/B) |
| | 72 (RHD) | |

* 1 : LHD 2TR–FE * 2 : LHD 2KD–FTV * 3 : LHD 5L–E * 4 : RHD 2TR–FE * 5 : RHD 2KD–FTV * 6 : RHD 5L–E * 7 : 2TR–FE
* 8 : 2KD–FTV, 5L–E

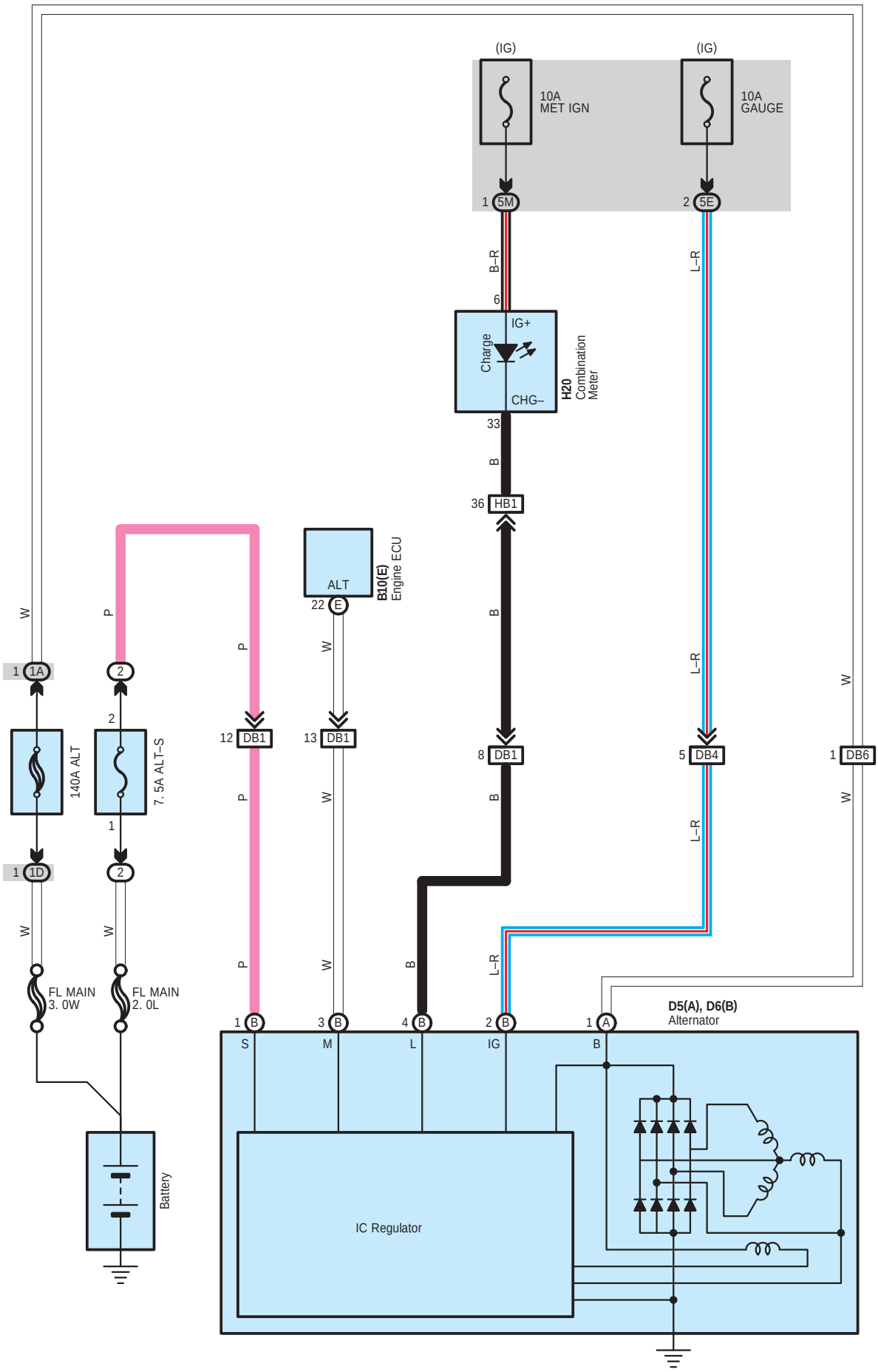
(IG)
10A
MET IGN
(IG)
10A
GAUGE
1 5M
2 5E
B–R
L–R
6
IG+
Charge
CHG–
H20
Combination
Meter
33
B
36 HB1
ALT
22 E
B10(E)
Engine ECU
W
P
1 1A
2
2
12 DB1
13 DB1
8 DB1
5 DB4
1 DB6
140A ALT
7. 5A ALT–S
1
1 1D
2
FL MAIN
3. 0W
FL MAIN
2. 0L
Battery
1 B
3 B
4 B
2 B
1 A
S
M
L
IG
B
D5(A), D6(B)
Alternator
IC Regulator

### : Parts Location

| Code | | See Page | Code | | See Page | Code | See Page |
|---|---|---|---|---|---|---|---|
| B10 | E | 46 (*3) | D5 | A | 54 (*6) | H20 | 49 (LHD) |
| | | 54 (*6) | D6 | B | 46 (*3) | | 57 (RHD) |
| D5 | A | 46 (*3) | | | 54 (*6) | | |

### : Relay Blocks

| Code | See Page | Relay Blocks (Relay Block Location) |
|---|---|---|
| 2 | 28 | Engine Room R/B No.2 (Inside of Battery Room) |

### : Junction Block and Wire Harness Connector

| Code | See Page | Junction Block and Wire Harness (Connector Location) |
|---|---|---|
| 1A | 24 | Engine Room Main Wire and Engine Room J/B No.1 (Engine Compartment Front) |
| 1D | | |
| 5E | 30 | Engine Room Main Wire and Instrument Panel J/B (Left Side of Instrument Panel) |
| 5M | 31 | Instrument Panel Wire and Instrument Panel J/B (Left Side of Instrument Panel) |

### : Connector Joining Wire Harness and Wire Harness

| Code | See Page | Joining Wire Harness and Wire Harness (Connector Location) |
|---|---|---|
| DB1 | 62 (*3) | Engine Wire and Engine Room Main Wire (Front Side of Engine Room R/B No.1) |
| | 70 (*6) | |
| DB4 | 62 (*3) | |
| | 70 (*6) | |
| DB6 | 62 (*3) | |
| | 70 (*6) | |
| HB1 | 64 (LHD) | Instrument Panel Wire and Engine Room Main Wire (Under the Instrument Panel J/B) |
| | 72 (RHD) | |

* 1 : LHD 2TR–FE * 2 : LHD 2KD–FTV * 3 : LHD 5L–E * 4 : RHD 2TR–FE * 5 : RHD 2KD–FTV * 6 : RHD 5L–E * 7 : 2TR–FE
* 8 : 2KD–FTV, 5L–E

# Ignition

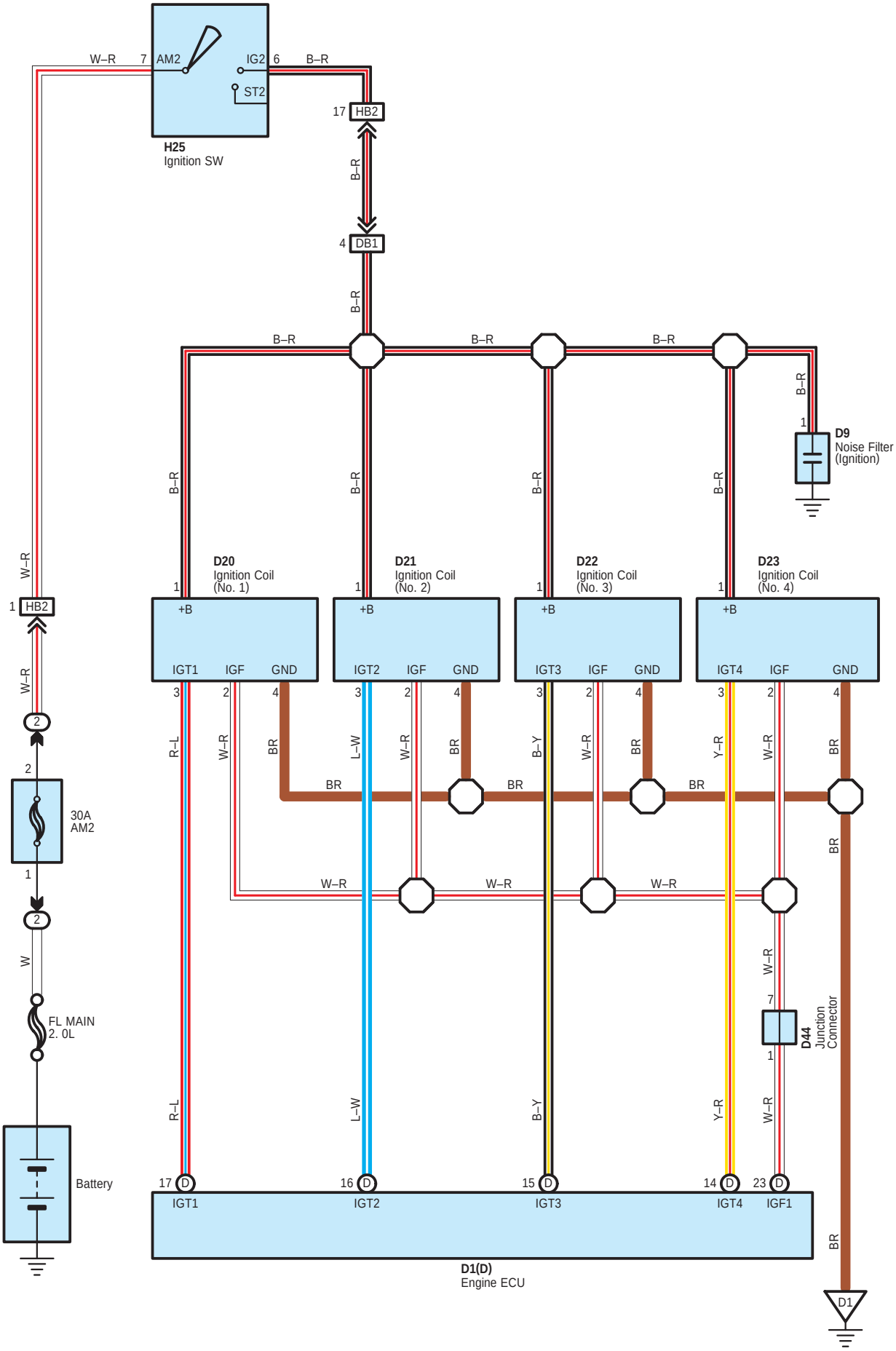

H25
Ignition SW
AM2
IG2
ST2
W–R
B–R
HB2
DB1
D9
Noise Filter
(Ignition)
D20
Ignition Coil
(No. 1)
D21
Ignition Coil
(No. 2)
D22
Ignition Coil
(No. 3)
D23
Ignition Coil
(No. 4)
+B
IGT1
IGT2
IGT3
IGT4
IGF
GND
R–L
L–W
B–Y
Y–R
BR
30A
AM2
W
FL MAIN
2. 0L
Battery
D44
Junction
Connector
IGF1
D1(D)
Engine ECU
D1

### : Parts Location

| Code | | See Page | Code | See Page | Code | See Page |
|---|---|---|---|---|---|---|
| D1 | D | 44 (*1) | D21 | 44 (*1) | D44 | 44 (*1) |
| | | 52 (*4) | | 52 (*4) | | 52 (*4) |
| D9 | | 44 (*1) | D22 | 44 (*1) | H25 | 49 (LHD) |
| | | 52 (*4) | | 52 (*4) | | 57 (RHD) |
| D20 | | 44 (*1) | D23 | 44 (*1) | | |
| | | 52 (*4) | | 52 (*4) | | |

### : Relay Blocks

| Code | See Page | Relay Blocks (Relay Block Location) |
|---|---|---|
| 2 | 28 | Engine Room R/B No.2 (Inside of Battery Room) |

### : Connector Joining Wire Harness and Wire Harness

| Code | See Page | Joining Wire Harness and Wire Harness (Connector Location) |
|---|---|---|
| DB1 | 60 (*1) | Engine Wire and Engine Room Main Wire (Front Side of Engine Room R/B No.1) |
| | 68 (*4) | |
| HB2 | 64 (LHD) | Instrument Panel Wire and Engine Room Main Wire (Under the Instrument Panel J/B) |
| | 72 (RHD) | |

### : Ground Points

| Code | See Page | Ground Points Location |
|---|---|---|
| D1 | 60 (*1) | Engine Block |
| | 68 (*4) | |

* 1 : LHD 2TR–FE * 2 : LHD 2KD–FTV * 3 : LHD 5L–E * 4 : RHD 2TR–FE * 5 : RHD 2KD–FTV * 6 : RHD 5L–E * 7 : 2TR–FE
* 8 : 2KD–FTV, 5L–E

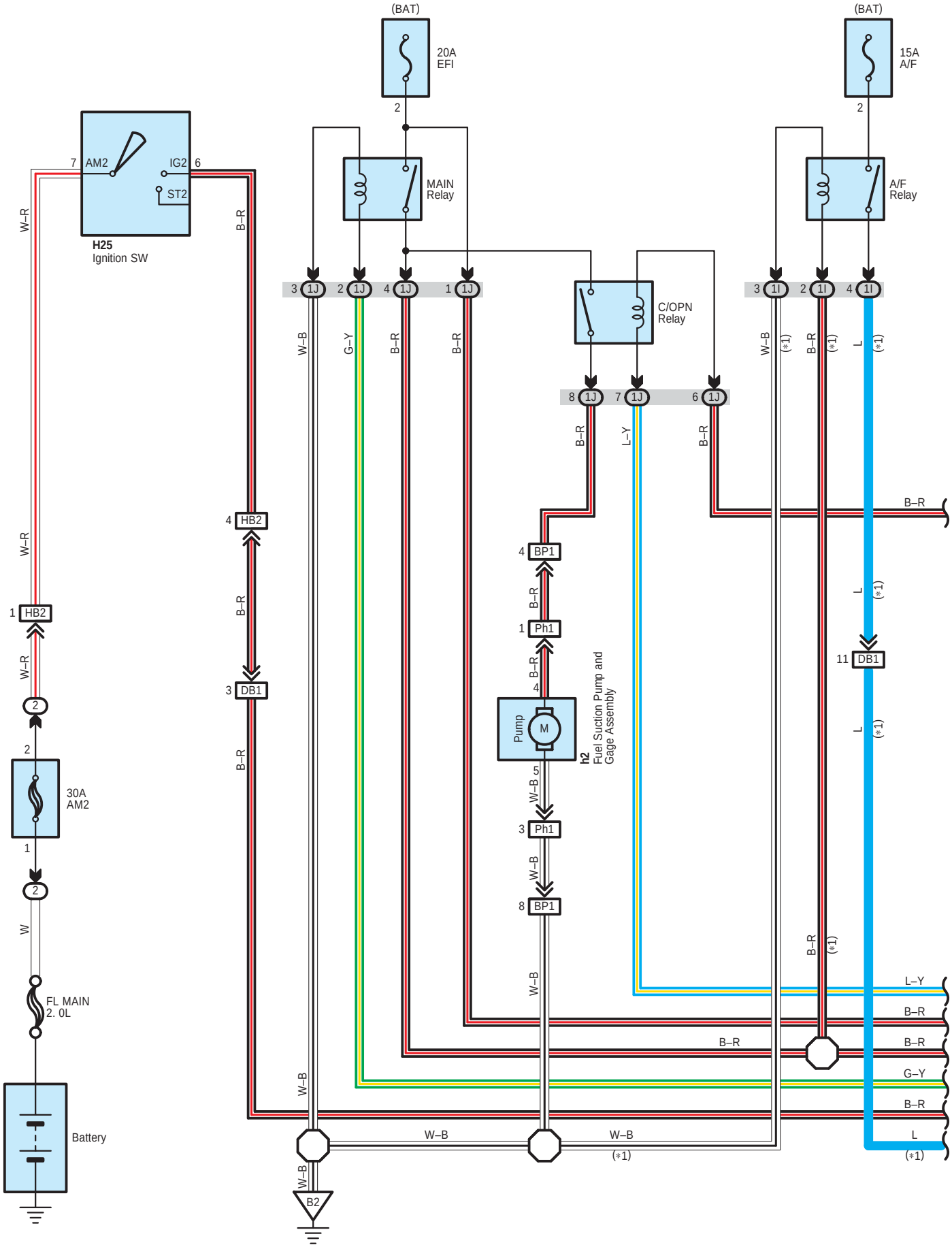
(BAT)
20A
EFI
2
MAIN
Relay
(BAT)
15A
A/F
2
A/F
Relay
7 AM2
IG2 6
ST2
H25
Ignition SW
W–R
B–R
3 1J
2 1J
4 1J
1 1J
C/OPN
Relay
8 1J
7 1J
6 1J
3 1I
2 1I
4 1I
W–B
G–Y
B–R
L–Y
L
(*1)
4 HB2
3 DB1
1 HB2
2
30A
AM2
1
FL MAIN
2. 0L
Battery
4 BP1
1 Ph1
Pump
M
h2
Fuel Suction Pump and
Gage Assembly
5
3 Ph1
8 BP1
11 DB1
W
W–B
B2

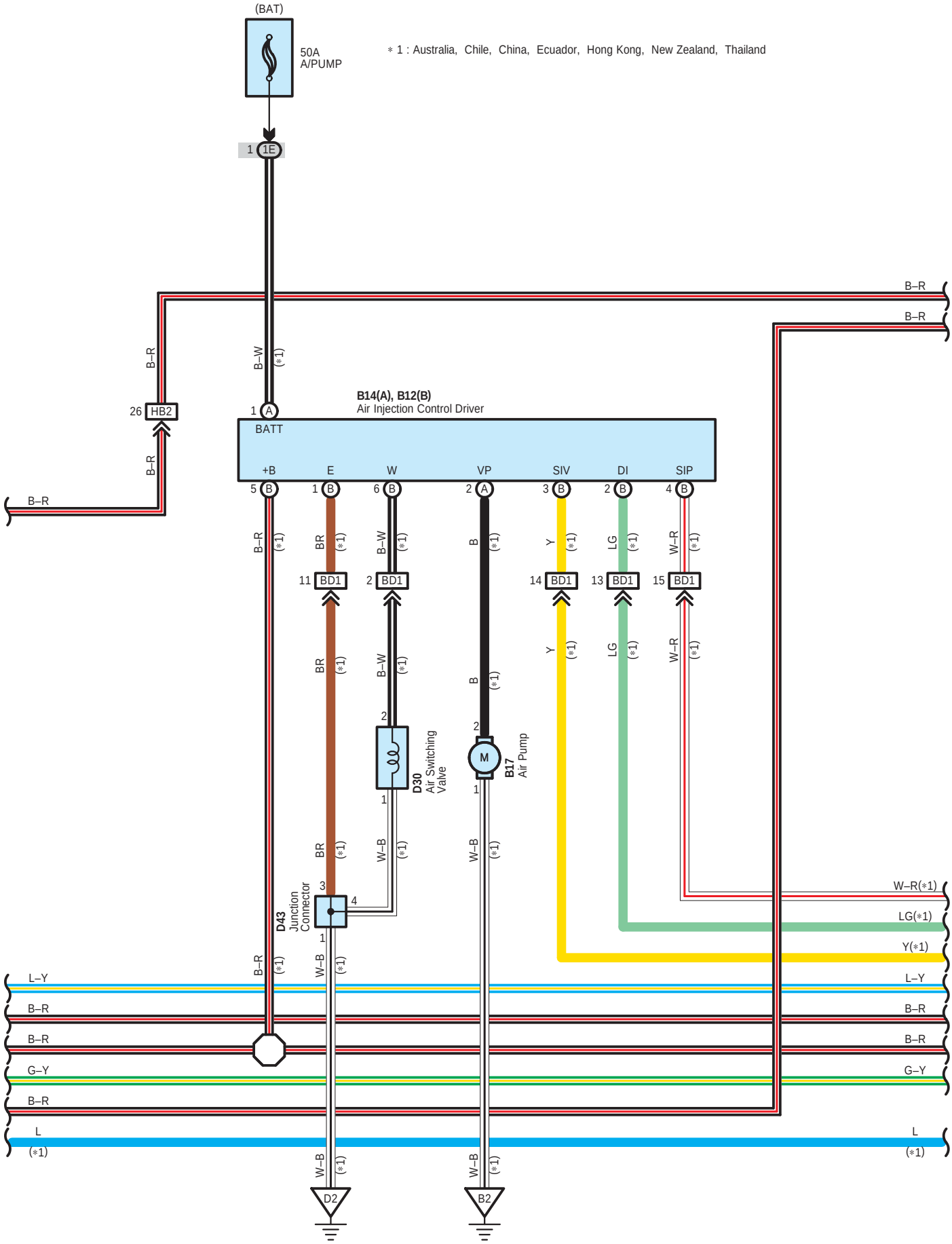
(BAT)
50A
A/PUMP
∗ 1 : Australia, Chile, China, Ecuador, Hong Kong, New Zealand, Thailand
1E
B–R
B–W
(∗1)
26 HB2
1 A
B14(A), B12(B)
Air Injection Control Driver
BATT
+B
E
W
VP
SIV
DI
SIP
5 B
1 B
6 B
2 A
3 B
2 B
4 B
11 BD1
2 BD1
14 BD1
13 BD1
15 BD1
BR
B–W
B
Y
LG
W–R
D30
Air Switching
Valve
B17
Air Pump
M
D43
Junction
Connector
W–B
W–R(∗1)
LG(∗1)
Y(∗1)
L–Y
G–Y
L
(∗1)
D2
B2

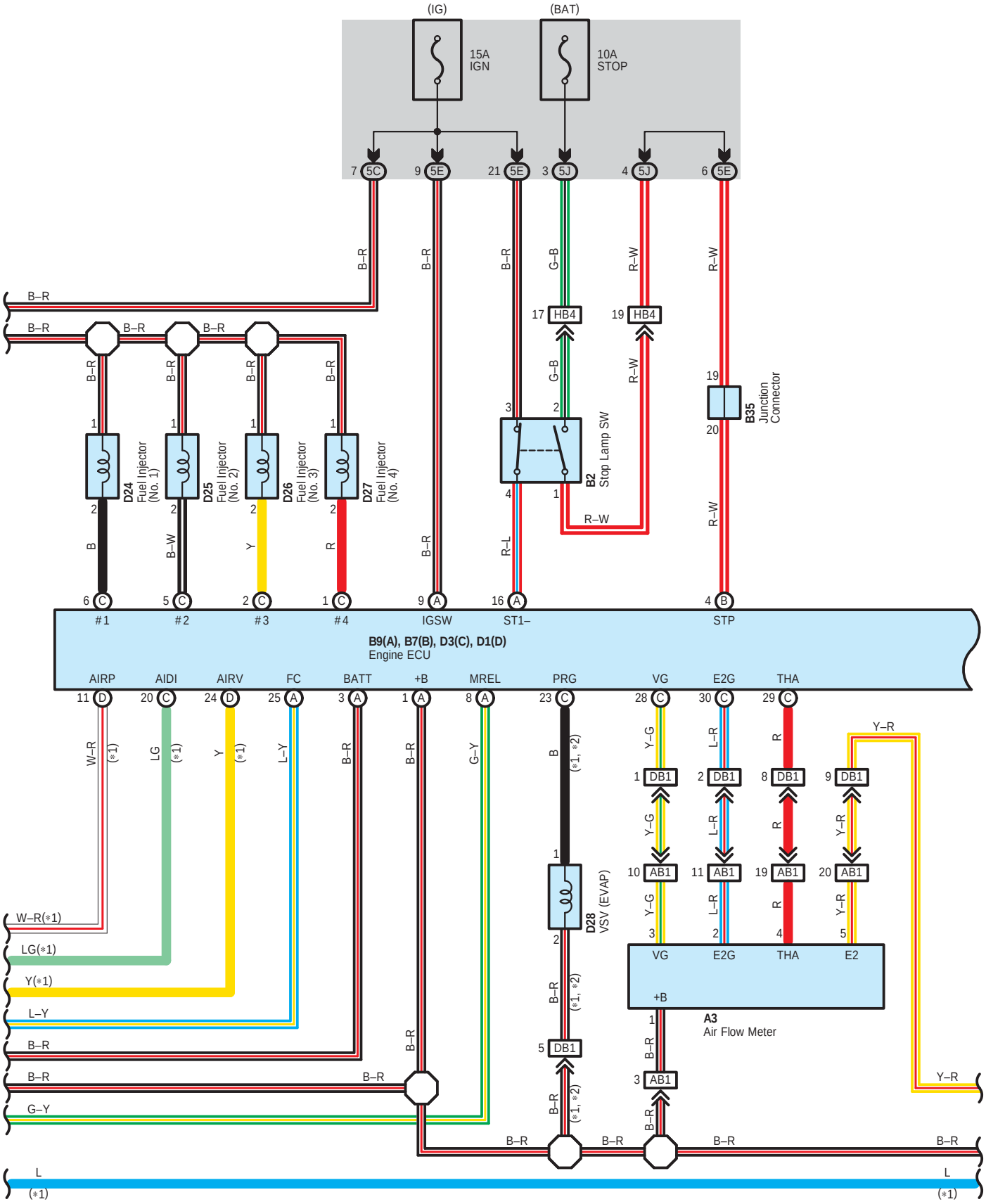
(IG)
(BAT)
15A
IGN
10A
STOP
7 5C
9 5E
21 5E
3 5J
4 5J
6 5E
B–R
G–B
R–W
17 HB4
19 HB4
D24 Fuel Injector (No. 1)
D25 Fuel Injector (No. 2)
D26 Fuel Injector (No. 3)
D27 Fuel Injector (No. 4)
B2 Stop Lamp SW
R–L
B35 Junction Connector
6 C #1
5 C #2
2 C #3
1 C #4
9 A IGSW
16 A ST1–
4 B STP
B9(A), B7(B), D3(C), D1(D)
Engine ECU
AIRP
AIDI
AIRV
FC
BATT
+B
MREL
PRG
VG
E2G
THA
W–R(*1)
LG(*1)
Y(*1)
L–Y
G–Y
B
(*1, *2)
D28 VSV (EVAP)
Y–G
L–R
R
Y–R
DB1
AB1
A3 Air Flow Meter
L
(*1)

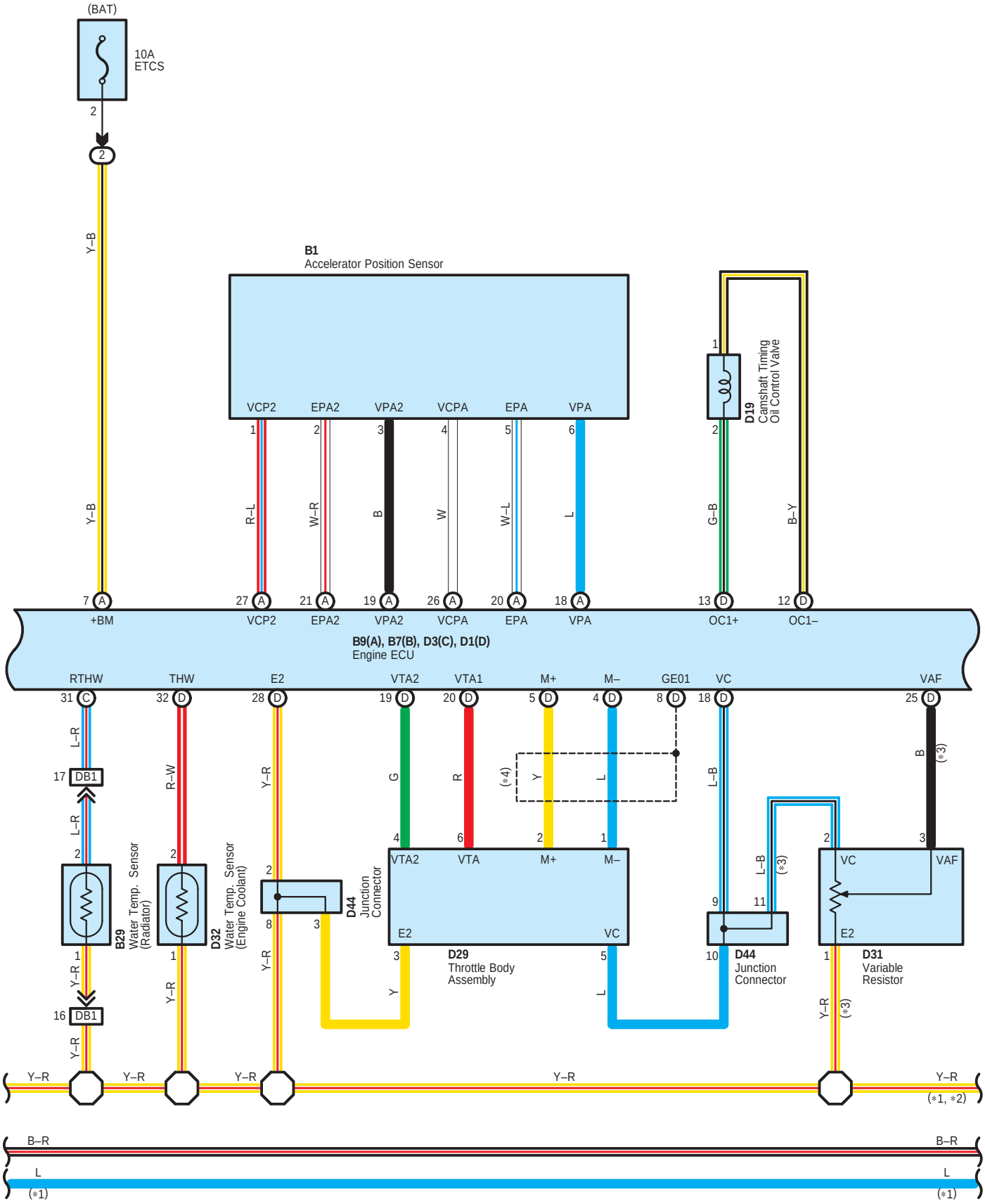


∗ 1 : Australia, Chile, China, Ecuador, Hong Kong, New Zealand, Thailand
∗ 2 : Costa Rica, Egypt, El Salvador, G. C. C. , Guatemala, Honduras, Malaysia, Nicaragua, Panama, Peru, Russia, South Africa, Ukraine, Vietnam
∗ 3 : Except ∗1, Except ∗2
∗ 4 : Shielded

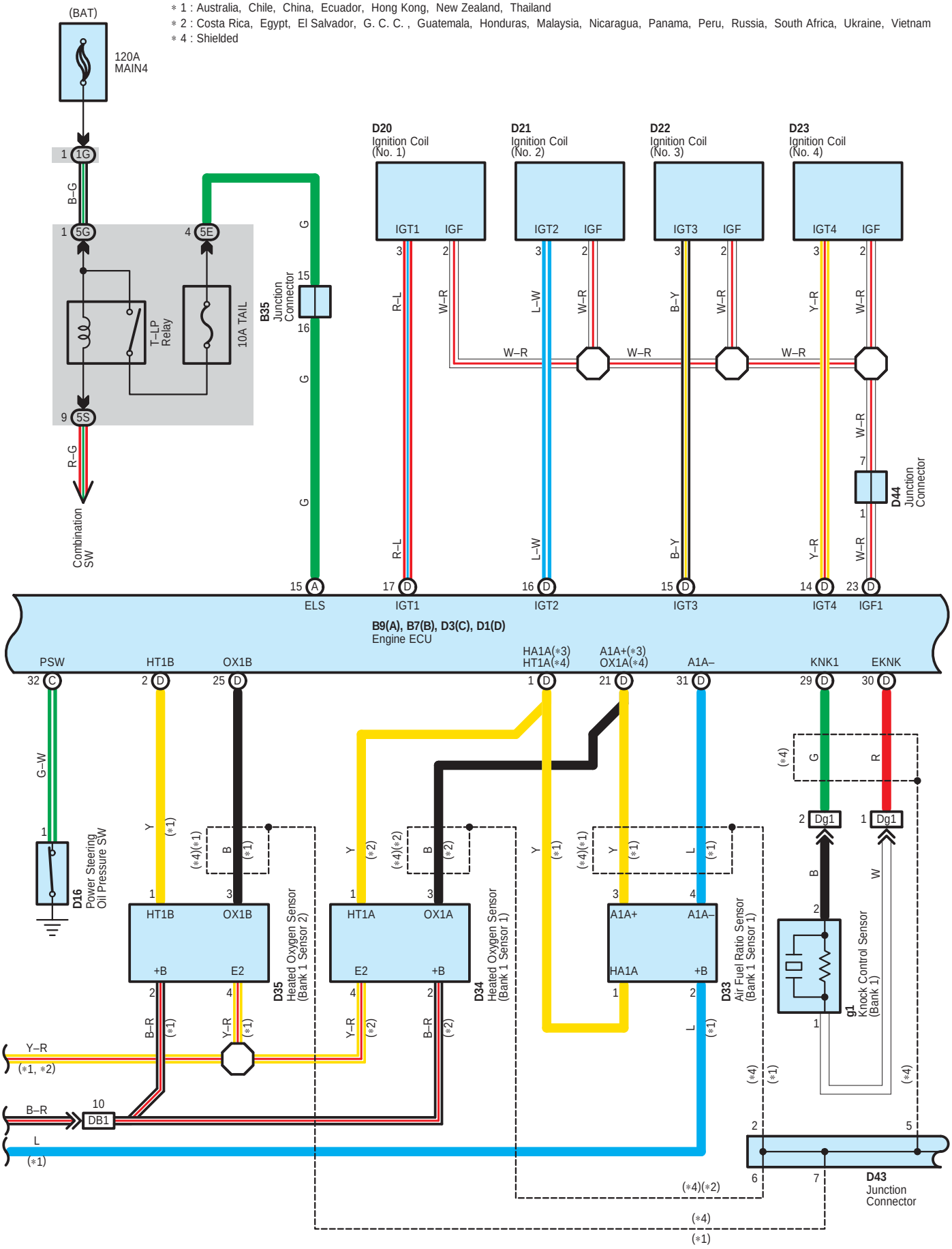
＊1 : Australia, Chile, China, Ecuador, Hong Kong, New Zealand, Thailand
＊2 : Costa Rica, Egypt, El Salvador, G. C. C. , Guatemala, Honduras, Malaysia, Nicaragua, Panama, Peru, Russia, South Africa, Ukraine, Vietnam
＊4 : Shielded
(BAT)
120A MAIN4
1G
5G
5E
5S
B–G
R–G
T–LP Relay
10A TAIL
Combination SW
B35 Junction Connector
D20 Ignition Coil (No. 1)
D21 Ignition Coil (No. 2)
D22 Ignition Coil (No. 3)
D23 Ignition Coil (No. 4)
IGT1
IGT2
IGT3
IGT4
IGF
R–L
L–W
B–Y
Y–R
W–R
G
D44 Junction Connector
ELS
IGT1
IGT2
IGT3
IGT4
IGF1
B9(A), B7(B), D3(C), D1(D)
Engine ECU
PSW
HT1B
OX1B
HA1A(＊3) HT1A(＊4)
A1A+(＊3) OX1A(＊4)
A1A–
KNK1
EKNK
G–W
D16 Power Steering Oil Pressure SW
HT1B
OX1B
+B
E2
D35 Heated Oxygen Sensor (Bank 1 Sensor 2)
HT1A
OX1A
D34 Heated Oxygen Sensor (Bank 1 Sensor 1)
A1A+
A1A–
HA1A
D33 Air Fuel Ratio Sensor (Bank 1 Sensor 1)
Dg1
g1 Knock Control Sensor (Bank 1)
Y–R
B–R
L
DB1
D43 Junction Connector

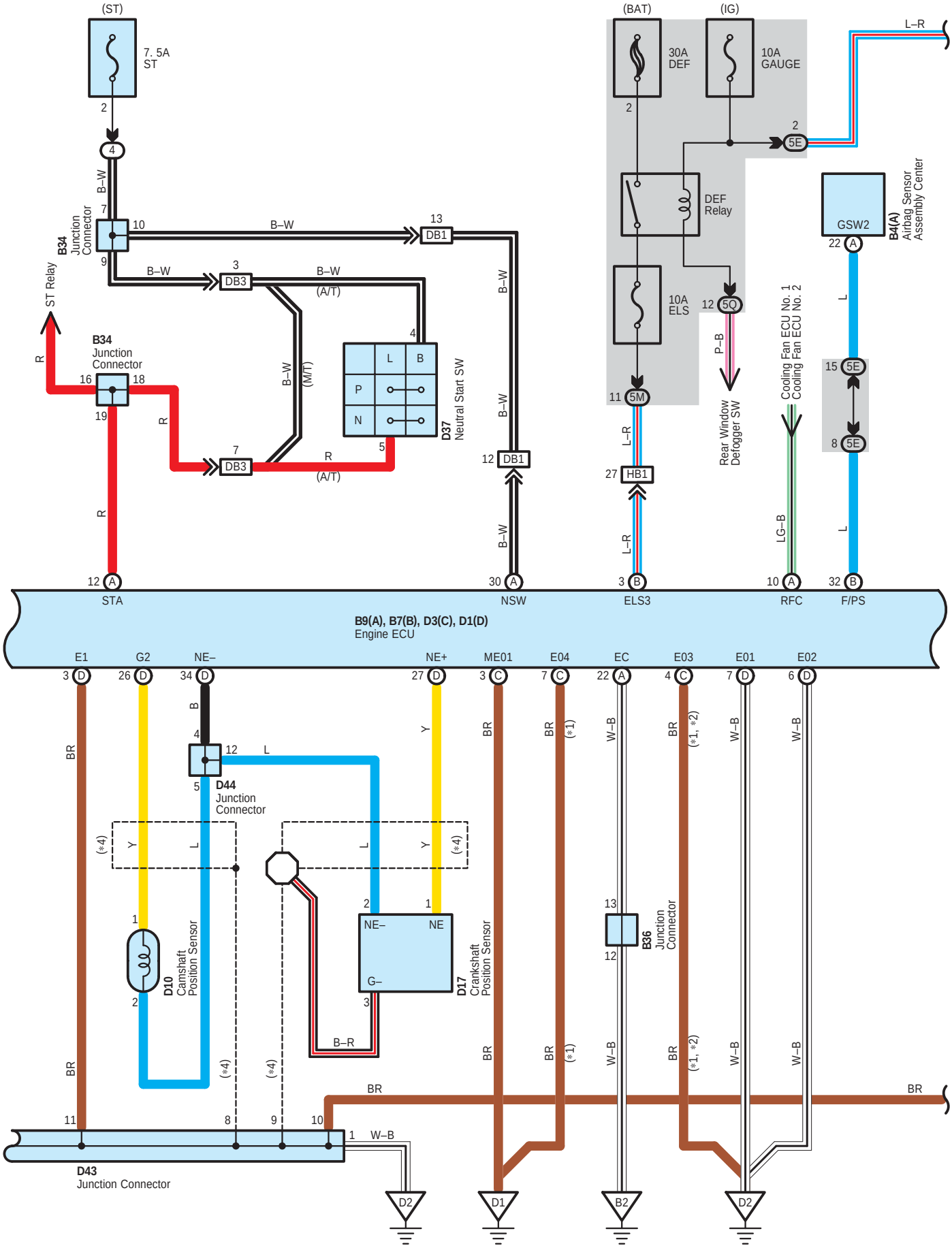
(ST)
7. 5A
ST
(BAT)
30A
DEF
(IG)
10A
GAUGE
L–R
DEF
Relay
10A
ELS
B34
Junction
Connector
ST Relay
B34
Junction
Connector
DB1
DB3
DB3
(A/T)
(M/T)
D37
Neutral Start SW
L
B
P
N
5Q
5M
HB1
5E
5E
5E
GSW2
B4(A)
Airbag Sensor
Assembly Center
Rear Window
Defogger SW
Cooling Fan ECU No. 1
Cooling Fan ECU No. 2
STA
NSW
ELS3
RFC
F/PS
B9(A), B7(B), D3(C), D1(D)
Engine ECU
E1
G2
NE–
NE+
ME01
E04
EC
E03
E01
E02
D44
Junction
Connector
D10
Camshaft
Position Sensor
D17
Crankshaft
Position Sensor
NE–
NE
G–
B36
Junction
Connector
D43
Junction Connector
D2
D1
B2
D2

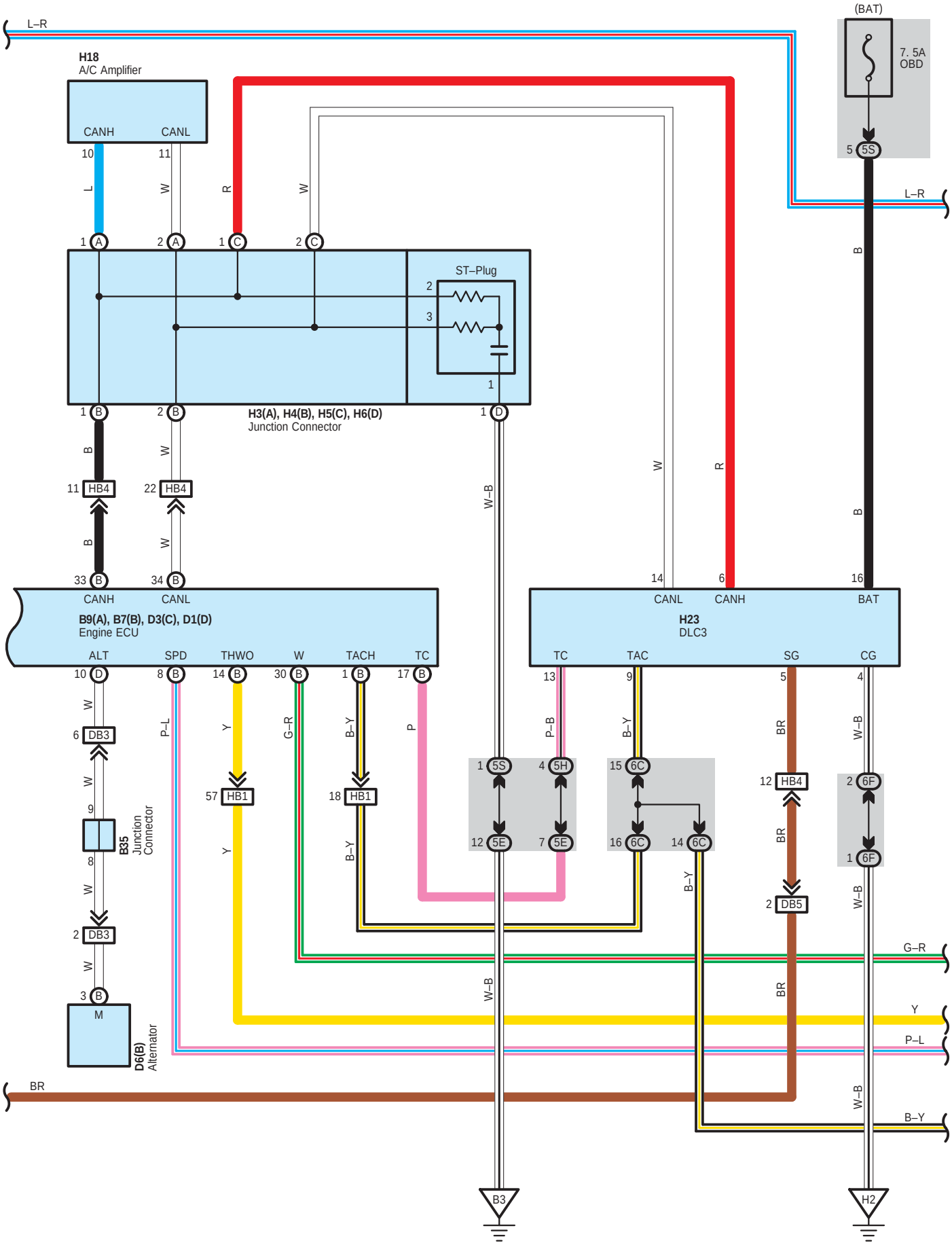

L–R
(BAT)
7. 5A
OBD
5S
H18
A/C Amplifier
CANH
CANL
ST–Plug
H3(A), H4(B), H5(C), H6(D)
Junction Connector
HB4
W–B
B9(A), B7(B), D3(C), D1(D)
Engine ECU
ALT
SPD
THWO
W
TACH
TC
H23
DLC3
BAT
TAC
SG
CG
DB3
HB1
5H
6C
6F
5E
DB5
B35
Junction
Connector
M
D6(B)
Alternator
G–R
Y
P–L
BR
B–Y
B3
H2

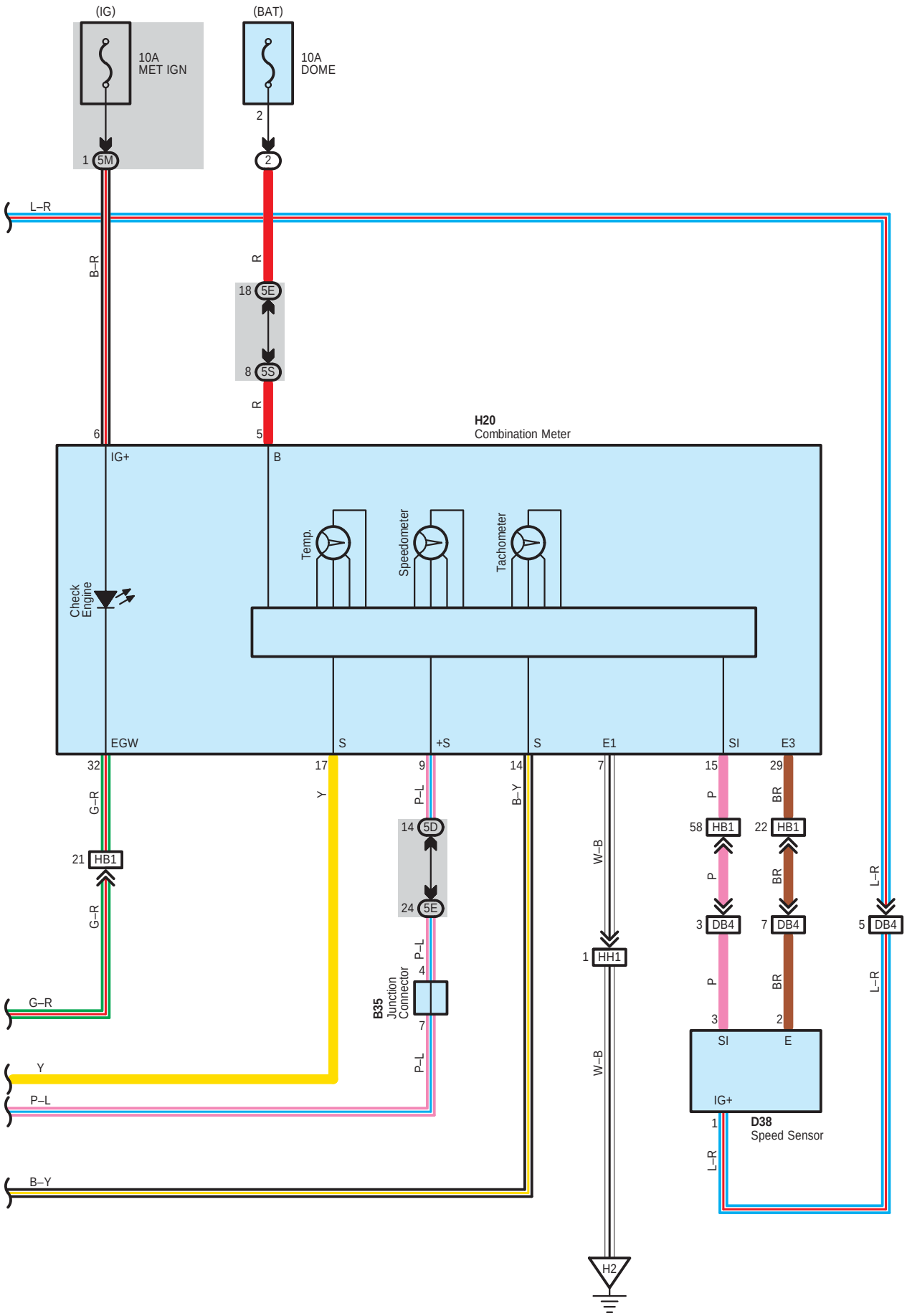
(IG)
10A
MET IGN
(BAT)
10A
DOME
2
1 5M
2
L–R
B–R
R
18 5E
8 5S
R
6
5
H20
Combination Meter
IG+
B
Temp.
Speedometer
Tachometer
Check
Engine
EGW
S
+S
S
E1
SI
E3
32
17
9
14
7
15
29
G–R
Y
P–L
B–Y
W–B
P
BR
21 HB1
14 5D
24 5E
58 HB1
22 HB1
G–R
P–L
P
BR
3 DB4
7 DB4
5 DB4
L–R
L–R
G–R
B35
Junction
Connector
4
7
1 HH1
P
BR
3
2
Y
P–L
SI
E
IG+
1
D38
Speed Sensor
L–R
W–B
B–Y
H2

**System Outline**

This system utilizes an engine ECU and maintains overall control of the engine, transmission and so on. An outline of the engine control is explained here.

**1. Input Signals**

(1) Water temp. signal circuit

The water temp. sensor (Engine coolant) detects the engine coolant temp. and has a built–in thermistor with a resistance which varies according to the engine coolant temp. thus the engine coolant temp. is input in the form of a control signal into TERMINAL THW of the engine ECU.

(2) Intake air temp. signal circuit

The intake air temp. sensor is installed in the air flow meter and detects the intake air temp., which is input as a control signal into TERMINAL THA of the engine ECU.

(3) RPM signal circuit

Camshaft position and crankshaft position are detected by the camshaft position sensor and crankshaft position sensor. Camshaft position is input as a control signal to TERMINAL G2 of the engine ECU, and engine RPM is input into TERMINAL NE+.

(4) Throttle signal circuit

The throttle body assembly detects the throttle valve opening angle, which is input as a control signal into TERMINALS VTA1 and VTA2 of the engine ECU.

(5) Vehicle speed signal circuit

The speed sensor detects the vehicle speed and inputs a control signal to TERMINAL SPD of the engine ECU via the combination meter.

(6) Battery signal circuit

Voltage is constantly applied to TERMINAL BATT of the engine ECU. When the ignition SW is turned on, the voltage for engine ECU operation is applied via the MAIN relay to TERMINAL +B of the engine ECU.

(7) Starter signal circuit

To confirm whether the engine is cranking, the voltage applied to the starter motor during cranking is detected and the signal is input into TERMINAL STA of the engine ECU as a control signal.

(8) Engine knock signal circuit

Engine knocking is detected by knock control sensor (Bank 1) and the signal is input into TERMINAL KNK1 of the engine ECU as a control signal.

**2. Control System**

∗ EFI system

The EFI system monitors the engine condition through the signals, which are input from each sensor to the engine ECU. The best fuel injection volume is decided based on this data and the program memorized by the engine ECU, and the control signal is output to TERMINALS #1, #2, #3 and #4 of the engine ECU to operate the fuel injector (Inject the fuel). The EFI system produces control of fuel injection operation by the engine ECU in response to the driving conditions.

∗ ESA system

The ESA system monitors the engine condition through the signals, which are input to the engine ECU from each sensor. The best ignition timing is detected according to this data and the memorized data in the engine ECU, and the control signal is output to TERMINALS IGT1, IGT2, IGT3 and IGT4. This signal controls the ignition coil to provide the best ignition timing for the driving conditions.

∗ Fuel pump control system

The engine ECU operation outputs to TERMINAL FC and controls the C/OPN relay. Thus controls the fuel pump drive speed in response to conditions.

∗ Air injection system

Air injection system sends air forcibly into the exhaust pipe with the air pump at the cold start. It activates the catalyst at early stage to promote to clean up exhaust emission. Air injection control driver runs the air pump and air switching valve with signal from the engine ECU.

**3. Diagnosis System**

With the diagnosis system, when there is a malfunctioning in the engine ECU signal system, the malfunction system is recorded in the memory. The malfunctioning system can be found by reading the display (Code) of the check engine warning light.

**4. Fail–Safe System**

When a malfunction occurs in any system, if there is a possibility of engine trouble being caused by continued control based on the signals from that system, the fail–safe system either controls the system by using data (Standard values) recorded in the engine ECU memory or else stops the engine.

**○ : Parts Location**

| Code | | See Page | Code | See Page | Code | | See Page |
|---|---|---|---|---|---|---|---|
| A3 | | 48 (LHD) | D16 | 44 (*1) | D34 | | 44 (*1) |
| | | 56 (RHD) | | 52 (*4) | | | 52 (*4) |
| B1 | | 48 (LHD) | D17 | 44 (*1) | D35 | | 44 (*1) |
| | | 56 (RHD) | | 52 (*4) | | | 52 (*4) |
| B2 | | 48 (LHD) | D19 | 44 (*1) | D37 | | 44 (*1) |
| | | 56 (RHD) | | 52 (*4) | | | 52 (*4) |
| B4 | A | 48 (LHD) | D20 | 44 (*1) | D38 | | 44 (*1) |
| | | 56 (RHD) | | 52 (*4) | | | 52 (*4) |
| B7 | B | 44 (*1) | D21 | 44 (*1) | D43 | | 44 (*1) |
| | | 52 (*4) | | 52 (*4) | | | 52 (*4) |
| B9 | A | 44 (*1) | D22 | 44 (*1) | D44 | | 44 (*1) |
| | | 52 (*4) | | 52 (*4) | | | 52 (*4) |
| B12 | B | 44 (*1) | D23 | 44 (*1) | H3 | A | 42, 49 (LHD) |
| | | 52 (*4) | | 52 (*4) | | | 42, 57 (RHD) |
| B14 | A | 44 (*1) | D24 | 44 (*1) | H4 | B | 42, 49 (LHD) |
| | | 52 (*4) | | 52 (*4) | | | 42, 57 (RHD) |
| B17 | | 44 (*1) | D25 | 44 (*1) | H5 | C | 42, 49 (LHD) |
| | | 52 (*4) | | 52 (*4) | | | 42, 57 (RHD) |
| B29 | | 44 (*1) | D26 | 44 (*1) | H6 | D | 42, 49 (LHD) |
| | | 52 (*4) | | 52 (*4) | | | 42, 57 (RHD) |
| B34 | | 48 (LHD) | D27 | 44 (*1) | H18 | | 49 (LHD) |
| | | 56 (RHD) | | 52 (*4) | | | 57 (RHD) |
| B35 | | 44 (*1) | D28 | 44 (*1) | H20 | | 49 (LHD) |
| | | 52 (*4) | | 52 (*4) | | | 57 (RHD) |
| B36 | | 44 (*1) | D29 | 44 (*1) | H23 | | 49 (LHD) |
| | | 52 (*4) | | 52 (*4) | | | 57 (RHD) |
| D1 | D | 44 (*1) | D30 | 44 (*1) | H25 | | 49 (LHD) |
| | | 52 (*4) | | 52 (*4) | | | 57 (RHD) |
| D3 | C | 44 (*1) | D31 | 44 (*1) | g1 | | 44 (*1) |
| | | 52 (*4) | | 52 (*4) | | | 52 (*4) |
| D6 | B | 44 (*1) | D32 | 44 (*1) | h2 | | 51 (LHD) |
| | | 52 (*4) | | 52 (*4) | | | 59 (RHD) |
| D10 | | 44 (*1) | D33 | 44 (*1) | | | |
| | | 52 (*4) | | 52 (*4) | | | |

**⬭ : Relay Blocks**

| Code | See Page | Relay Blocks (Relay Block Location) |
|---|---|---|
| 2 | 28 | Engine Room R/B No.2 (Inside of Battery Room) |
| 4 | 29 | Instrument Panel R/B (Under the Glove Box) |

* 1 : LHD 2TR–FE * 2 : LHD 2KD–FTV * 3 : LHD 5L–E * 4 : RHD 2TR–FE * 5 : RHD 2KD–FTV * 6 : RHD 5L–E * 7 : 2TR–FE
* 8 : 2KD–FTV, 5L–E

**: Junction Block and Wire Harness Connector**

| Code | See Page | Junction Block and Wire Harness (Connector Location) |
|---|---|---|
| 1E | 24 | Engine Room Main Wire and Engine Room J/B No.1 (Engine Compartment Front) |
| 1G | | |
| 1I | 25 | |
| 1J | | |
| 5C | 30 | Instrument Panel Wire and Instrument Panel J/B (Left Side of Instrument Panel) |
| 5D | | |
| 5E | 30 | Engine Room Main Wire and Instrument Panel J/B (Left Side of Instrument Panel) |
| 5G | | |
| 5H | 30 | Instrument Panel Wire and Instrument Panel J/B (Left Side of Instrument Panel) |
| 5J | | |
| 5M | 31 | |
| 5Q | | |
| 5S | | |
| 6C | 38 (LHD) | Instrument Panel Wire and Center J/B (Instrument Panel Reinforcement LH) |
| | 38 (RHD) | Instrument Panel Wire and Center J/B (Instrument Panel Reinforcement RH) |
| 6F | 38 (LHD) | Instrument Panel Wire and Center J/B (Instrument Panel Reinforcement LH) |
| | 38 (RHD) | Instrument Panel Wire and Center J/B (Instrument Panel Reinforcement RH) |

**: Connector Joining Wire Harness and Wire Harness**

| Code | See Page | Joining Wire Harness and Wire Harness (Connector Location) |
|---|---|---|
| AB1 | 64 (LHD) | Cowl to Head Lamp Wire and Engine Room Main Wire (Left Side of the Instrument Panel J/B) |
| | 72 (RHD) | |
| BD1 | 60 (*1) | Engine Room Main Wire and Engine Wire (Front Floor Panel Right) |
| | 68 (*4) | |
| BP1 | 66 (LHD) | Engine Room Main Wire and Frame Wire (Under the Floor Panel) |
| | 74 (RHD) | |
| DB1 | 60 (*1) | Engine Wire and Engine Room Main Wire (Front Side of Engine Room R/B No.1) |
| | 68 (*4) | |
| DB3 | 60 (*1) | |
| | 68 (*4) | |
| DB4 | 60 (*1) | |
| | 68 (*4) | |
| DB5 | 60 (*1) | |
| | 68 (*4) | |
| Dg1 | 60 (*1) | Engine Wire and Sensor Wire (Left Side of Cylinder Block) |
| | 68 (*4) | |
| HB1 | 64 (LHD) | Instrument Panel Wire and Engine Room Main Wire (Under the Instrument Panel J/B) |
| | 72 (RHD) | |
| HB2 | 64 (LHD) | |
| | 72 (RHD) | |
| HB4 | 64 (LHD) | |
| | 72 (RHD) | |
| HH1 | 64 (LHD) | Instrument Panel Wire and Instrument Panel Wire (Near the Steering Column) |
| | 72 (RHD) | Instrument Panel Wire and Instrument Panel Wire (Instrument Panel Reinforcement RH) |
| Ph1 | 66 (LHD) | Frame Wire and Fuel Tank Wire (Near the Fuel Tank) |
| | 74 (RHD) | |

* 1 : LHD 2TR–FE * 2 : LHD 2KD–FTV * 3 : LHD 5L–E * 4 : RHD 2TR–FE * 5 : RHD 2KD–FTV * 6 : RHD 5L–E * 7 : 2TR–FE
* 8 : 2KD–FTV, 5L–E

▽ : **Ground Points**

| Code | See Page | Ground Points Location |
|---|---|---|
| B2 | 60 (*1) | Front Floor Panel Right |
| | 68 (*4) | |
| B3 | 60 (*1) | Front Floor Panel Left |
| | 68 (*4) | |
| D1 | 60 (*1) | Engine Block |
| | 68 (*4) | |
| D2 | 60 (*1) | |
| | 68 (*4) | |
| H2 | 64 (LHD) | Instrument Panel Reinforcement |
| | 72 (RHD) | |

* 1 : LHD 2TR–FE * 2 : LHD 2KD–FTV * 3 : LHD 5L–E * 4 : RHD 2TR–FE * 5 : RHD 2KD–FTV * 6 : RHD 5L–E * 7 : 2TR–FE
* 8 : 2KD–FTV, 5L–E

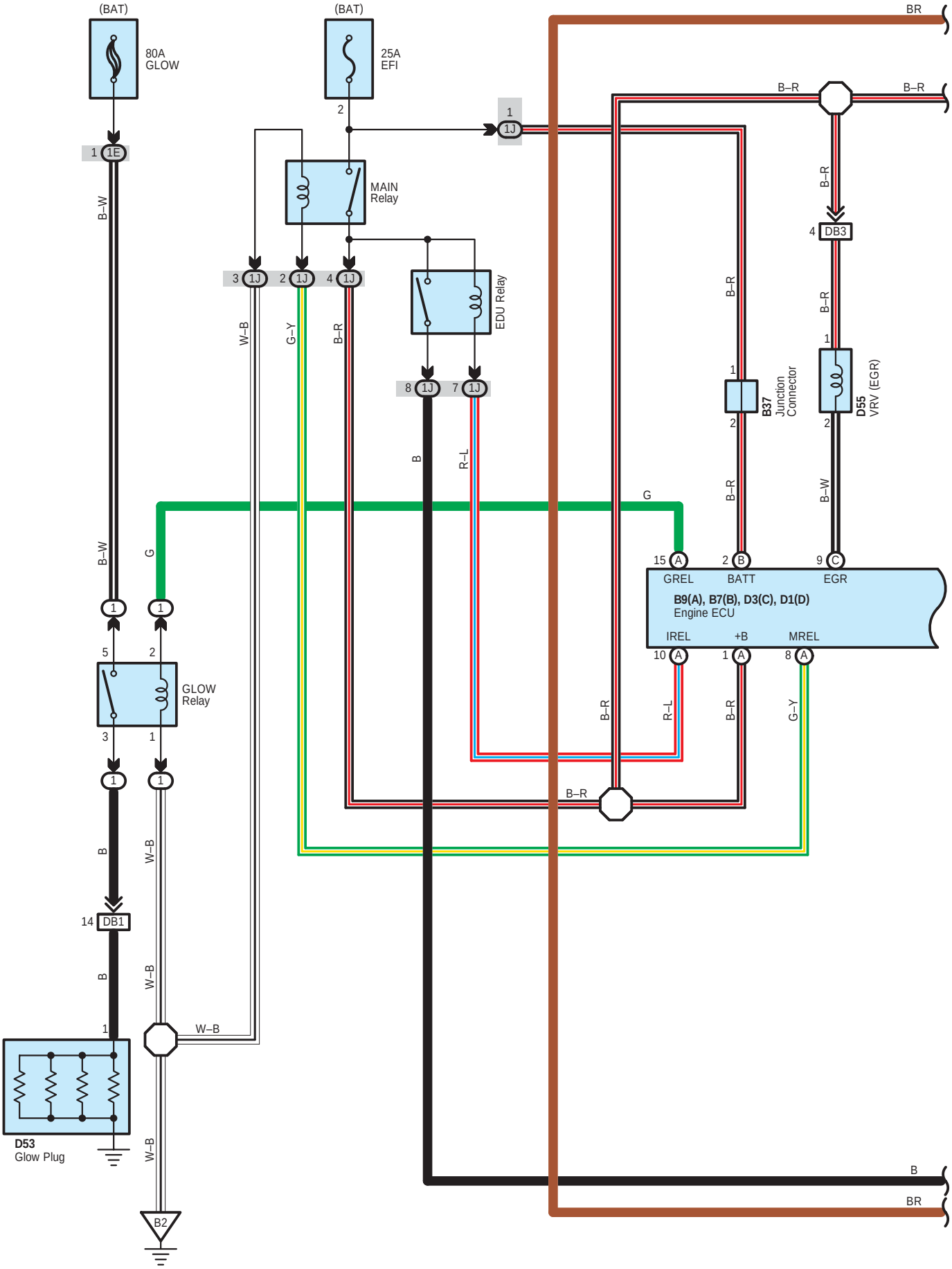
(BAT)
80A
GLOW
(BAT)
25A
EFI
BR
B–R
B–R
MAIN
Relay
EDU Relay
B–W
W–B
G–Y
B–R
B
R–L
G
B37
Junction
Connector
D55
VRV (EGR)
GLOW
Relay
GREL
BATT
EGR
B9(A), B7(B), D3(C), D1(D)
Engine ECU
IREL
+B
MREL
R–L
G–Y
DB3
DB1
D53
Glow Plug
B2
B
BR

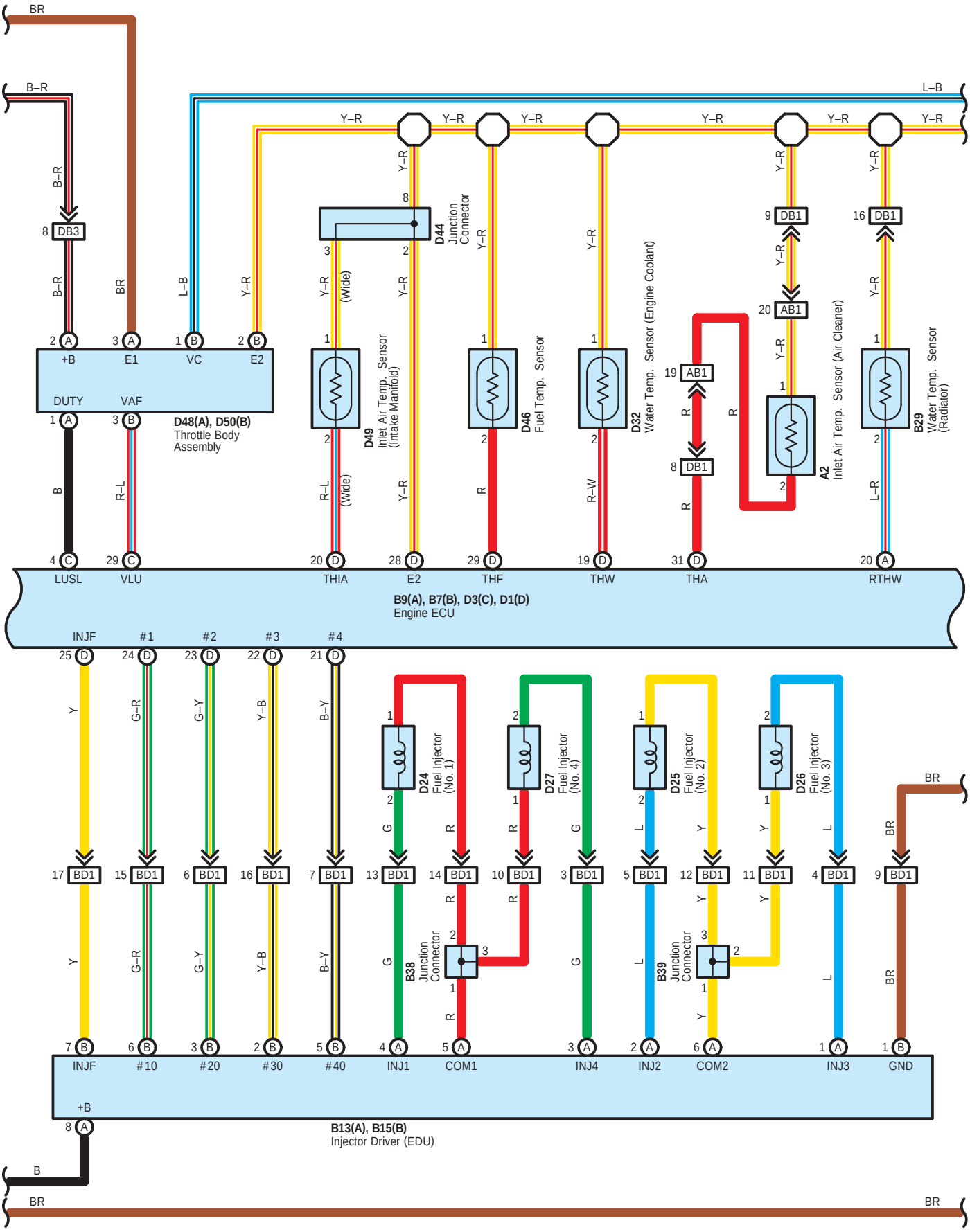
BR
B–R
L–B
Y–R
B–R
8 DB3
2 A +B
3 A E1
1 B VC
2 B E2
DUTY
VAF
1 A
3 B
D48(A), D50(B)
Throttle Body
Assembly
B
R–L
4 C LUSL
29 C VLU
D44
Junction
Connector
3
2
8
D49
Inlet Air Temp. Sensor
(Intake Manifold)
(Wide)
(Wide)
20 D THIA
28 D E2
D46
Fuel Temp. Sensor
29 D THF
D32
Water Temp. Sensor (Engine Coolant)
R–W
19 D THW
19 AB1
8 DB1
31 D THA
9 DB1
20 AB1
A2
Inlet Air Temp. Sensor (Air Cleaner)
16 DB1
B29
Water Temp. Sensor
(Radiator)
L–R
20 A RTHW
B9(A), B7(B), D3(C), D1(D)
Engine ECU
INJF
#1
#2
#3
#4
25 D
24 D
23 D
22 D
21 D
G–R
G–Y
Y–B
B–Y
D24
Fuel Injector
(No. 1)
D27
Fuel Injector
(No. 4)
D25
Fuel Injector
(No. 2)
D26
Fuel Injector
(No. 3)
17 BD1
15 BD1
6 BD1
16 BD1
7 BD1
13 BD1
14 BD1
10 BD1
3 BD1
5 BD1
12 BD1
11 BD1
4 BD1
9 BD1
B38
Junction
Connector
B39
Junction
Connector
7 B INJF
6 B #10
3 B #20
2 B #30
5 B #40
4 A INJ1
5 A COM1
3 A INJ4
2 A INJ2
6 A COM2
1 A INJ3
1 B GND
+B
8 A
B13(A), B15(B)
Injector Driver (EDU)
B
BR
BR

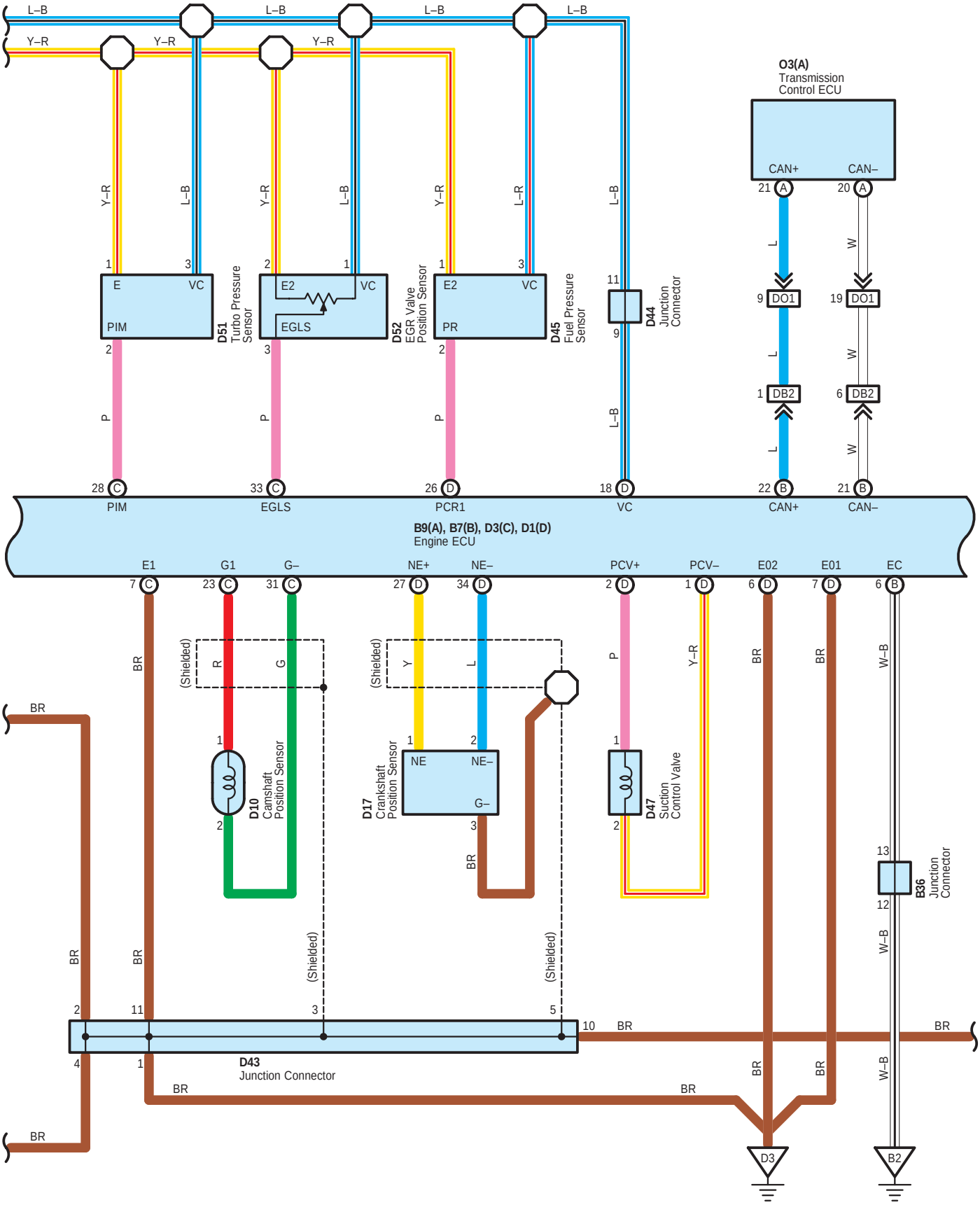
L–B
Y–R
O3(A)
Transmission Control ECU
CAN+
CAN–
D51 Turbo Pressure Sensor
D52 EGR Valve Position Sensor
D45 Fuel Pressure Sensor
D44 Junction Connector
PIM
EGLS
PCR1
VC
B9(A), B7(B), D3(C), D1(D)
Engine ECU
E1
G1
G–
NE+
NE–
PCV+
PCV–
E02
E01
EC
(Shielded)
D10 Camshaft Position Sensor
D17 Crankshaft Position Sensor
D47 Suction Control Valve
B36 Junction Connector
D43 Junction Connector
BR
W–B
D3
B2

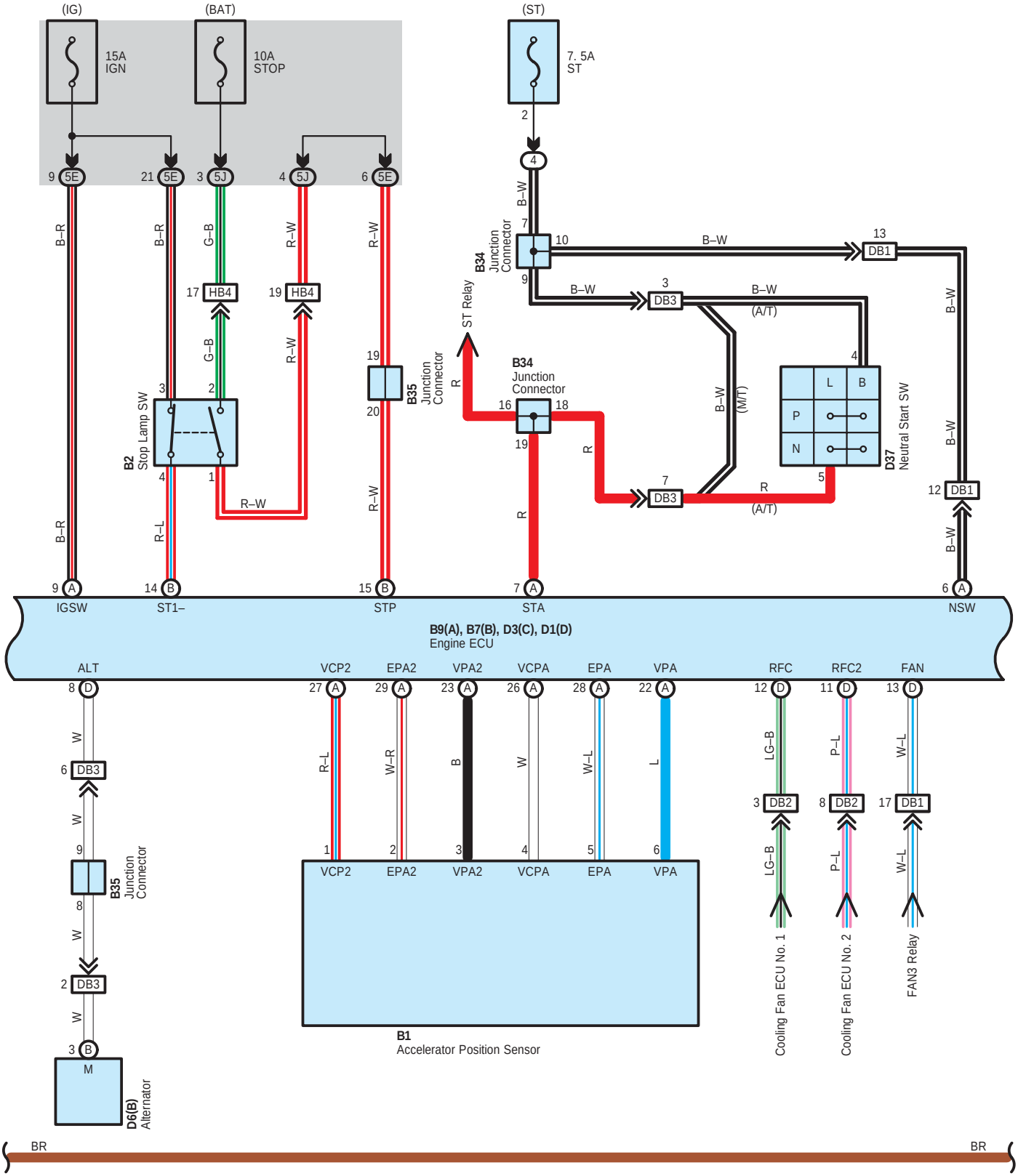
(IG)
(BAT)
(ST)
15A
IGN
10A
STOP
7. 5A
ST
B2
Stop Lamp SW
B34
Junction
Connector
B35
Junction
Connector
ST Relay
D37
Neutral Start SW
(A/T)
(M/T)
IGSW
ST1–
STP
STA
NSW
B9(A), B7(B), D3(C), D1(D)
Engine ECU
ALT
VCP2
EPA2
VPA2
VCPA
EPA
VPA
RFC
RFC2
FAN
B1
Accelerator Position Sensor
D6(B)
Alternator
Cooling Fan ECU No. 1
Cooling Fan ECU No. 2
FAN3 Relay
BR
BR

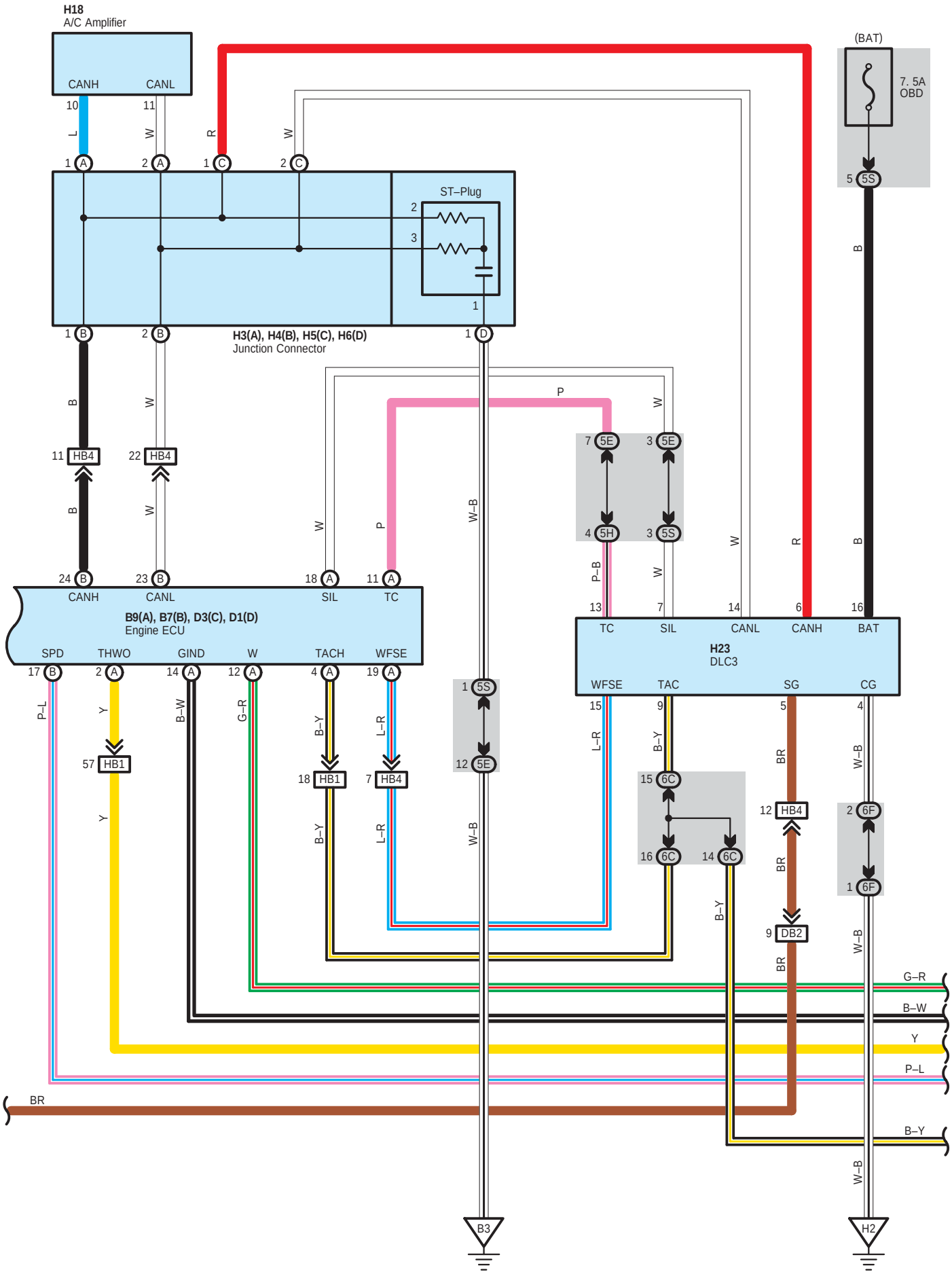
H18
A/C Amplifier
CANH
CANL
(BAT)
7. 5A
OBD
ST–Plug
H3(A), H4(B), H5(C), H6(D)
Junction Connector
HB4
B9(A), B7(B), D3(C), D1(D)
Engine ECU
SPD
THWO
GIND
W
TACH
WFSE
SIL
TC
H23
DLC3
TAC
SG
CG
BAT
HB1
DB2
B3
H2
G–R
B–W
Y
P–L
BR
B–Y
W–B

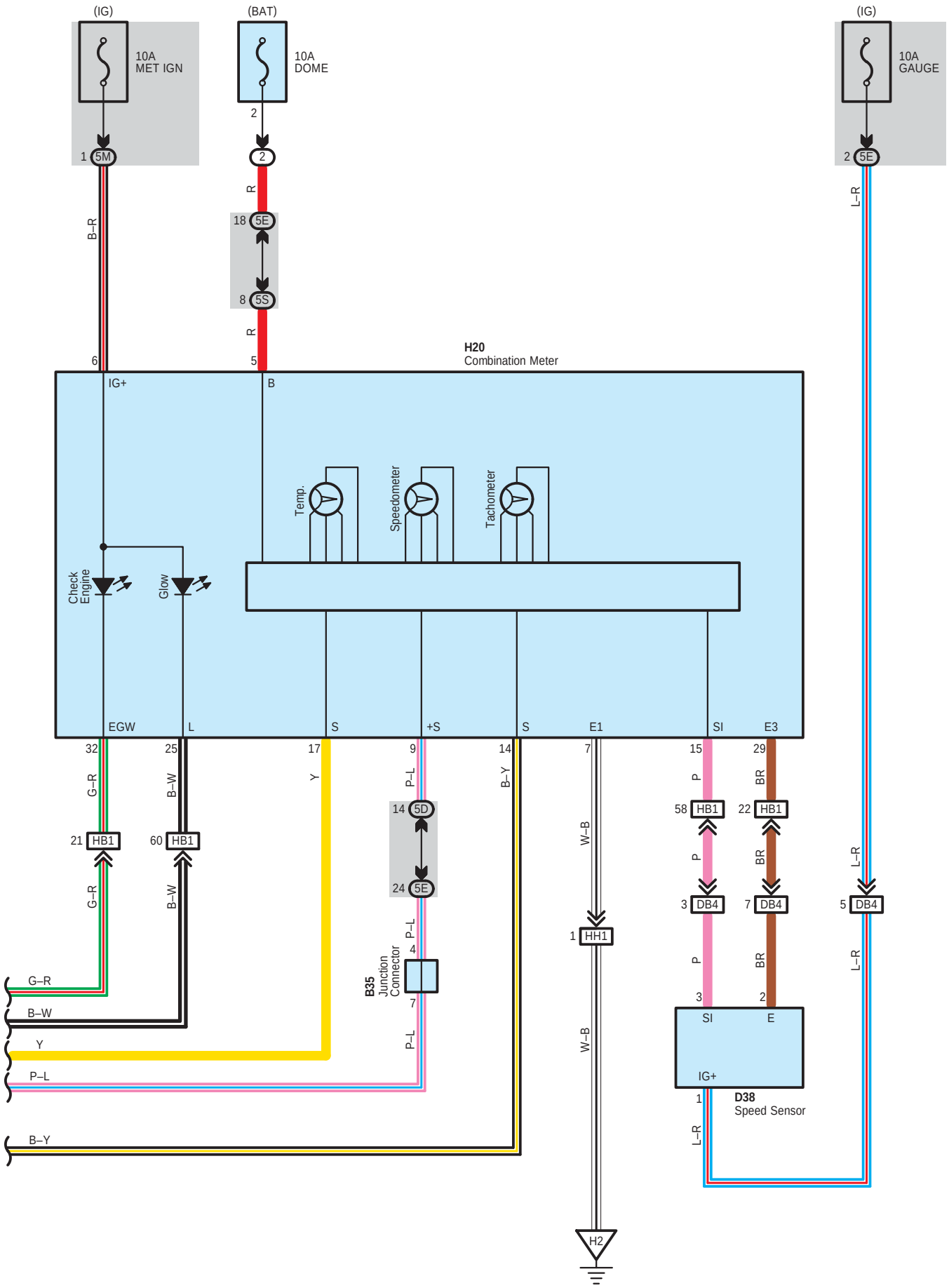
(IG)
10A
MET IGN
1 5M
B–R
6
(BAT)
10A
DOME
2
2
R
18 5E
8 5S
R
5
(IG)
10A
GAUGE
2 5E
L–R
H20
Combination Meter
IG+
B
Temp.
Speedometer
Tachometer
Check
Engine
Glow
EGW
L
S
+S
S
E1
SI
E3
32
25
17
9
14
7
15
29
G–R
B–W
Y
P–L
B–Y
W–B
P
BR
21 HB1
60 HB1
14 5D
24 5E
58 HB1
22 HB1
3 DB4
7 DB4
5 DB4
1 HH1
B35
Junction
Connector
4
7
3
2
SI
E
IG+
1
D38
Speed Sensor
H2

**System Outline**

This system utilizes an engine ECU and maintains overall control of the engine, transmission and so on. An outline of the engine control is explained here.

**1. Input Signals**

(1) Water temp. signal circuit

The water temp. sensor (Engine coolant) detects the engine coolant temp. and has a built–in thermistor with a resistance varies according to the engine coolant temp. Thus the engine coolant temp. is input in the form of a control signal to TERMINAL THW of the engine ECU.

(2) Intake air temp. signal circuit

The intake air temp. sensor is detects the intake air temp., which is input as a control signal to TERMINAL THA of the engine ECU.

(3) RPM signal circuit

Camshaft position and crankshaft position are detected by the camshaft position sensor and crankshaft position sensor. Camshaft position is input as a control signal to TERMINAL G1 of the engine ECU, and engine RPM is input into TERMINAL NE+.

(4) Throttle signal circuit

The accelerator position sensor detects the accelerator pedal opening angle, which is input as a control signal to TERMINALS VPA and VPA2 of the engine ECU.

(5) Vehicle speed signal circuit

The speed sensor detects the vehicle speed and inputs a control signal to TERMINAL SPD of the engine ECU via the combination meter.

(6) Battery signal circuit

Voltage is constantly applied to TERMINAL BATT of the engine ECU. When the ignition SW is turned to on, voltage for engine ECU operation is applied via the MAIN relay to TERMINAL +B of the engine ECU.

(7) Started signal circuit

To confirm that the engine is cranking, the voltage applied to the starter motor during cranking is detected and is input as a control signal to TERMINAL STA of the engine ECU.

(8) Fuel temp. signal circuit

The fuel temp. sensor is detects the fuel temp., which is input as a control signal to TERMINAL THF of the engine ECU.

(9) Intake air vacuum pressure signal system

Intake air vacuum pressure is detected by the turbo pressure sensor and is input as a control signal to TERMINAL PIM of the engine ECU.

**2. Control System**

* EGR control
  The EGR control system detects the signals from each sensor, then the current is output to the TERMINAL EGR to control the VRV (EGR).
* Common rail pressure control
  The target rail pressure is calculated according to the engine status (Accelerator opening, engine speed) and environmental change detected by sensors. The fuel amount to be pressure–fed from the supply pump is calculated so as to match the indicated value of rail pressure sensor with the target value and the signal is sent to the intake amount adjusting valve of the supply pump in order to control the rail pressure.
* Fuel injection timing control
  The fuel injection timing is controlled by calculating the basic fuel injection timing based on the engine status (Accelerator opening, engine speed), making corrections according to environmental change detected by sensors, then sending a signal to the solenoid control valve of the injector via the injector driver (EDU).
* Fuel injection volume control
  The fuel injection volume is controlled by calculating the basic fuel injection volume based on the engine status (Accelerator opening, engine speed), making corrections according to environmental change detected by sensors and the inside pressure conditions in the rail, then sending a signal to the solenoid control valve of the injector via the injector driver (EDU).
* Pilot injection control
  The fuel injection volume and timing are controlled by calculating the pilot injection volume/timing based on the engine status (Accelerator opening, engine speed), making corrections according to environmental change detected by sensors, then sending a signal to the solenoid control valve of the injector via the injector driver (EDU).

**3. Diagnosis System**

With the diagnosis system, when there is a malfunctioning in the engine ECU signal system, the malfunction system is recorded in the memory. The malfunctioning system can be found by reading the display (Code) of the check engine warning light.

**4. Fail–Safe System**

When a malfunction occurs in any system, if there is a possibility of engine trouble being caused by continued control based on the signals from that system, the fail–safe system either controls the system by using data (Standard values) recorded in the engine ECU memory or else stops the engine.

**: Parts Location**

| Code | See Page | Code | See Page | Code | See Page |
|---|---|---|---|---|---|
| A2 | 48 (LHD) | D3 C | 53 (*5) | D48 A | 45 (*2) |
| | 56 (RHD) | D6 B | 45 (*2) | | 53 (*5) |
| B1 | 48 (LHD) | | 53 (*5) | D49 | 45 (*2) |
| | 56 (RHD) | D10 | 45 (*2) | | 53 (*5) |
| B2 | 48 (LHD) | | 53 (*5) | D50 B | 45 (*2) |
| | 56 (RHD) | D17 | 45 (*2) | | 53 (*5) |
| B7 B | 45 (*2) | | 53 (*5) | D51 | 45 (*2) |
| | 53 (*5) | D24 | 45 (*2) | | 53 (*5) |
| B9 A | 45 (*2) | | 53 (*5) | D52 | 45 (*2) |
| | 53 (*5) | D25 | 45 (*2) | | 53 (*5) |
| B13 A | 45 (*2) | | 53 (*5) | D53 | 45 (*2) |
| | 53 (*5) | D26 | 45 (*2) | | 53 (*5) |
| B15 B | 45 (*2) | | 53 (*5) | D55 | 45 (*2) |
| | 53 (*5) | D27 | 45 (*2) | | 53 (*5) |
| B29 | 45 (*2) | | 53 (*5) | H3 A | 42, 49 (LHD) |
| | 53 (*5) | D32 | 45 (*2) | | 42, 57 (RHD) |
| B34 | 48 (LHD) | | 53 (*5) | H4 B | 42, 49 (LHD) |
| | 56 (RHD) | D37 | 45 (*2) | | 42, 57 (RHD) |
| B35 | 45 (*2) | | 53 (*5) | H5 C | 42, 49 (LHD) |
| | 53 (*5) | D38 | 45 (*2) | | 42, 57 (RHD) |
| B36 | 45 (*2) | | 53 (*5) | H6 D | 42, 49 (LHD) |
| | 53 (*5) | D43 | 45 (*2) | | 42, 57 (RHD) |
| B37 | 45 (*2) | | 53 (*5) | H18 | 49 (LHD) |
| | 53 (*5) | D44 | 45 (*2) | | 57 (RHD) |
| B38 | 45 (*2) | | 53 (*5) | H20 | 49 (LHD) |
| | 53 (*5) | D45 | 45 (*2) | | 57 (RHD) |
| B39 | 45 (*2) | | 53 (*5) | H23 | 49 (LHD) |
| | 53 (*5) | D46 | 45 (*2) | | 57 (RHD) |
| D1 D | 45 (*2) | | 53 (*5) | O3 A | 48 (LHD) |
| | 53 (*5) | D47 | 45 (*2) | | 56 (RHD) |
| D3 C | 45 (*2) | | 53 (*5) | | |

**: Relay Blocks**

| Code | See Page | Relay Blocks (Relay Block Location) |
|---|---|---|
| 1 | 23 (*8) | Engine Room R/B No.1 (Engine Compartment Front) |
| 2 | 28 | Engine Room R/B No.2 (Inside of Battery Room) |
| 4 | 29 | Instrument Panel R/B (Under the Glove Box) |

* 1 : LHD 2TR–FE * 2 : LHD 2KD–FTV * 3 : LHD 5L–E * 4 : RHD 2TR–FE * 5 : RHD 2KD–FTV * 6 : RHD 5L–E * 7 : 2TR–FE
* 8 : 2KD–FTV, 5L–E

### : Junction Block and Wire Harness Connector

| Code | See Page | Junction Block and Wire Harness (Connector Location) |
|---|---|---|
| 1E | 24 | Engine Room Main Wire and Engine Room J/B No.1 (Engine Compartment Front) |
| 1J | 25 | |
| 5D | 30 | Instrument Panel Wire and Instrument Panel J/B (Left Side of Instrument Panel) |
| 5E | 30 | Engine Room Main Wire and Instrument Panel J/B (Left Side of Instrument Panel) |
| 5H | 30 | Instrument Panel Wire and Instrument Panel J/B (Left Side of Instrument Panel) |
| 5J | | |
| 5M | 31 | |
| 5S | | |
| 6C | 38 (LHD) | Instrument Panel Wire and Center J/B (Instrument Panel Reinforcement LH) |
| | 38 (RHD) | Instrument Panel Wire and Center J/B (Instrument Panel Reinforcement RH) |
| 6F | 38 (LHD) | Instrument Panel Wire and Center J/B (Instrument Panel Reinforcement LH) |
| | 38 (RHD) | Instrument Panel Wire and Center J/B (Instrument Panel Reinforcement RH) |

### : Connector Joining Wire Harness and Wire Harness

| Code | See Page | Joining Wire Harness and Wire Harness (Connector Location) |
|---|---|---|
| AB1 | 64 (LHD) | Cowl to Head Lamp Wire and Engine Room Main Wire (Left Side of the Instrument Panel J/B) |
| | 72 (RHD) | |
| BD1 | 61 (*2) | Engine Room Main Wire and Engine Wire (Front Floor Panel Right) |
| | 69 (*5) | |
| DB1 | 61 (*2) | Engine Wire and Engine Room Main Wire (Front Side of Engine Room R/B No.1) |
| | 69 (*5) | |
| DB2 | 61 (*2) | |
| | 69 (*5) | |
| DB3 | 61 (*2) | |
| | 69 (*5) | |
| DB4 | 61 (*2) | |
| | 69 (*5) | |
| DO1 | 61 (*2) | Engine Wire and Floor Wire (Front Floor Panel Right) |
| | 69 (*5) | |
| HB1 | 64 (LHD) | Instrument Panel Wire and Engine Room Main Wire (Under the Instrument Panel J/B) |
| | 72 (RHD) | |
| HB4 | 64 (LHD) | |
| | 72 (RHD) | |
| HH1 | 64 (LHD) | Instrument Panel Wire and Instrument Panel Wire (Near the Steering Column) |
| | 72 (RHD) | Instrument Panel Wire and Instrument Panel Wire (Instrument Panel Reinforcement RH) |

### : Ground Points

| Code | See Page | Ground Points Location |
|---|---|---|
| B2 | 61 (*2) | Front Floor Panel Right |
| | 69 (*5) | |
| B3 | 61 (*2) | Front Floor Panel Left |
| | 69 (*5) | |
| D3 | 61 (*2) | Engine Block |
| | 69 (*5) | |
| H2 | 64 (LHD) | Instrument Panel Reinforcement |
| | 72 (RHD) | |

* 1 : LHD 2TR–FE * 2 : LHD 2KD–FTV * 3 : LHD 5L–E * 4 : RHD 2TR–FE * 5 : RHD 2KD–FTV * 6 : RHD 5L–E * 7 : 2TR–FE
* 8 : 2KD–FTV, 5L–E

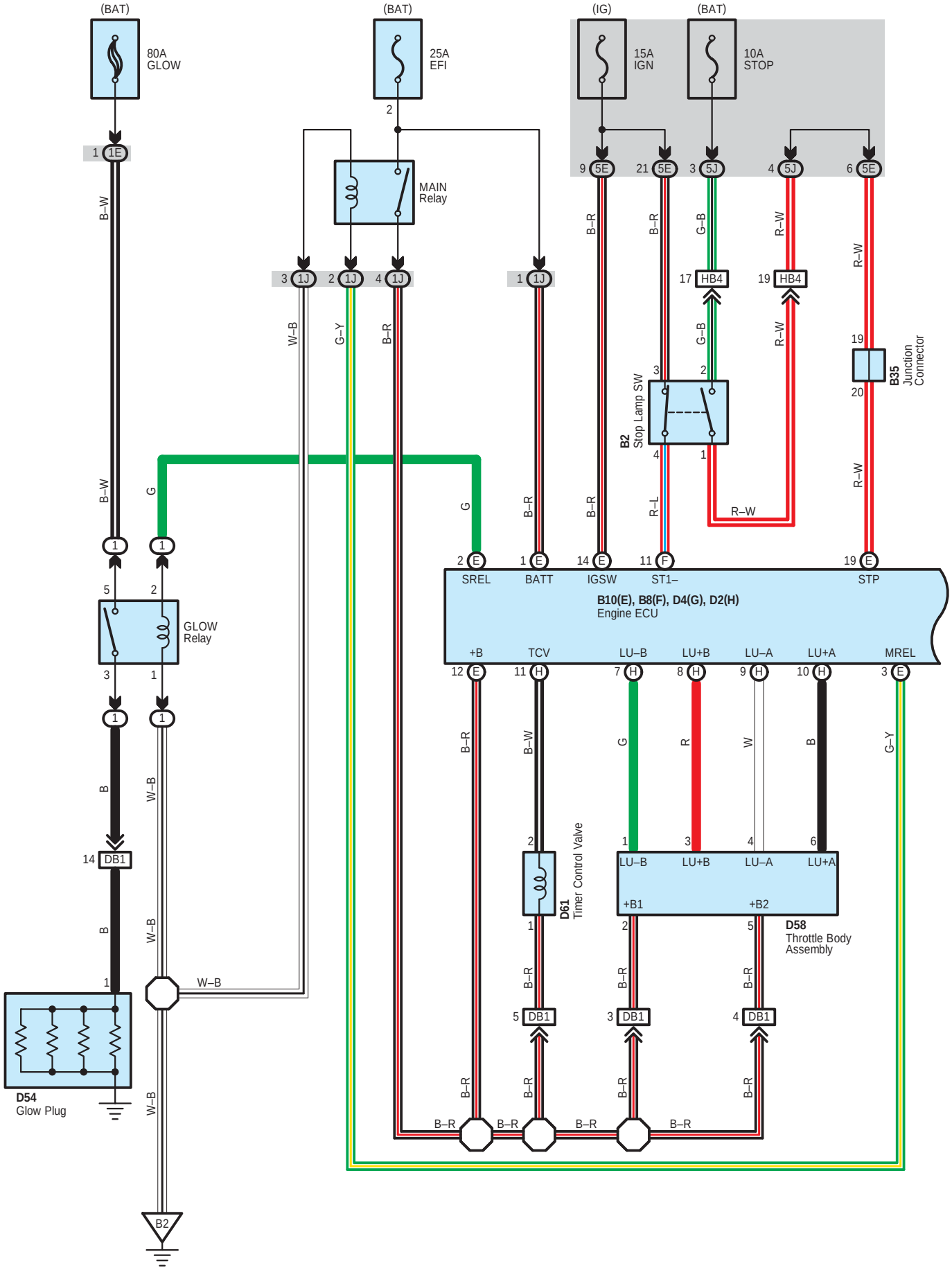
(BAT)
80A
GLOW
(BAT)
25A
EFI
(IG)
15A
IGN
(BAT)
10A
STOP
MAIN
Relay
GLOW
Relay
B2
Stop Lamp SW
B35
Junction
Connector
B10(E), B8(F), D4(G), D2(H)
Engine ECU
SREL
BATT
IGSW
ST1–
STP
+B
TCV
LU–B
LU+B
LU–A
LU+A
MREL
D61
Timer Control Valve
D58
Throttle Body
Assembly
D54
Glow Plug
B2

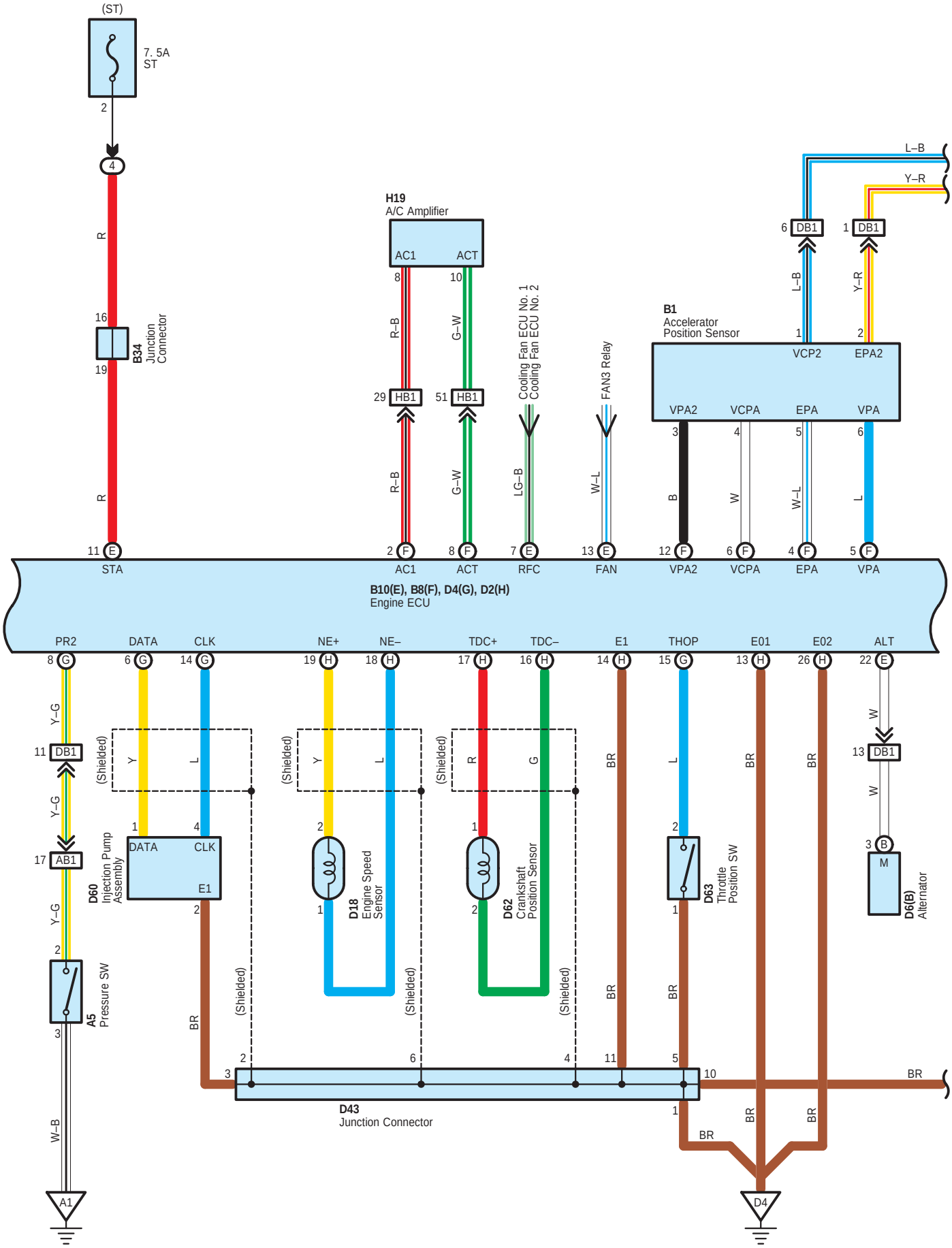
(ST)
7. 5A
ST
2
4
R
16
B34
Junction
Connector
19
R
11 E
STA
H19
A/C Amplifier
AC1
ACT
8
10
R–B
G–W
29 HB1
51 HB1
R–B
G–W
2 F
AC1
8 F
ACT
Cooling Fan ECU No. 1
Cooling Fan ECU No. 2
LG–B
7 E
RFC
FAN3 Relay
W–L
13 E
FAN
B1
Accelerator
Position Sensor
6 DB1
1 DB1
L–B
Y–R
1
2
VCP2
EPA2
VPA2
VCPA
EPA
VPA
3
4
5
6
B
W
W–L
L
12 F
VPA2
6 F
VCPA
4 F
EPA
5 F
VPA
B10(E), B8(F), D4(G), D2(H)
Engine ECU
PR2
DATA
CLK
NE+
NE–
TDC+
TDC–
E1
THOP
E01
E02
ALT
8 G
6 G
14 G
19 H
18 H
17 H
16 H
14 H
15 G
13 H
26 H
22 E
Y–G
11 DB1
Y–G
17 AB1
Y–G
2
3
W–B
A5
Pressure SW
A1
(Shielded)
Y
L
1
4
DATA
CLK
E1
2
D60
Injection Pump
Assembly
BR
(Shielded)
2
3
(Shielded)
Y
L
2
1
D18
Engine Speed
Sensor
(Shielded)
6
(Shielded)
R
G
1
2
D62
Crankshaft
Position Sensor
(Shielded)
4
BR
BR
BR
L
2
1
D63
Throttle
Position SW
BR
BR
BR
W
13 DB1
W
3 B
M
D6(B)
Alternator
11
5
10
BR
D43
Junction Connector
1
BR
BR
BR
D4

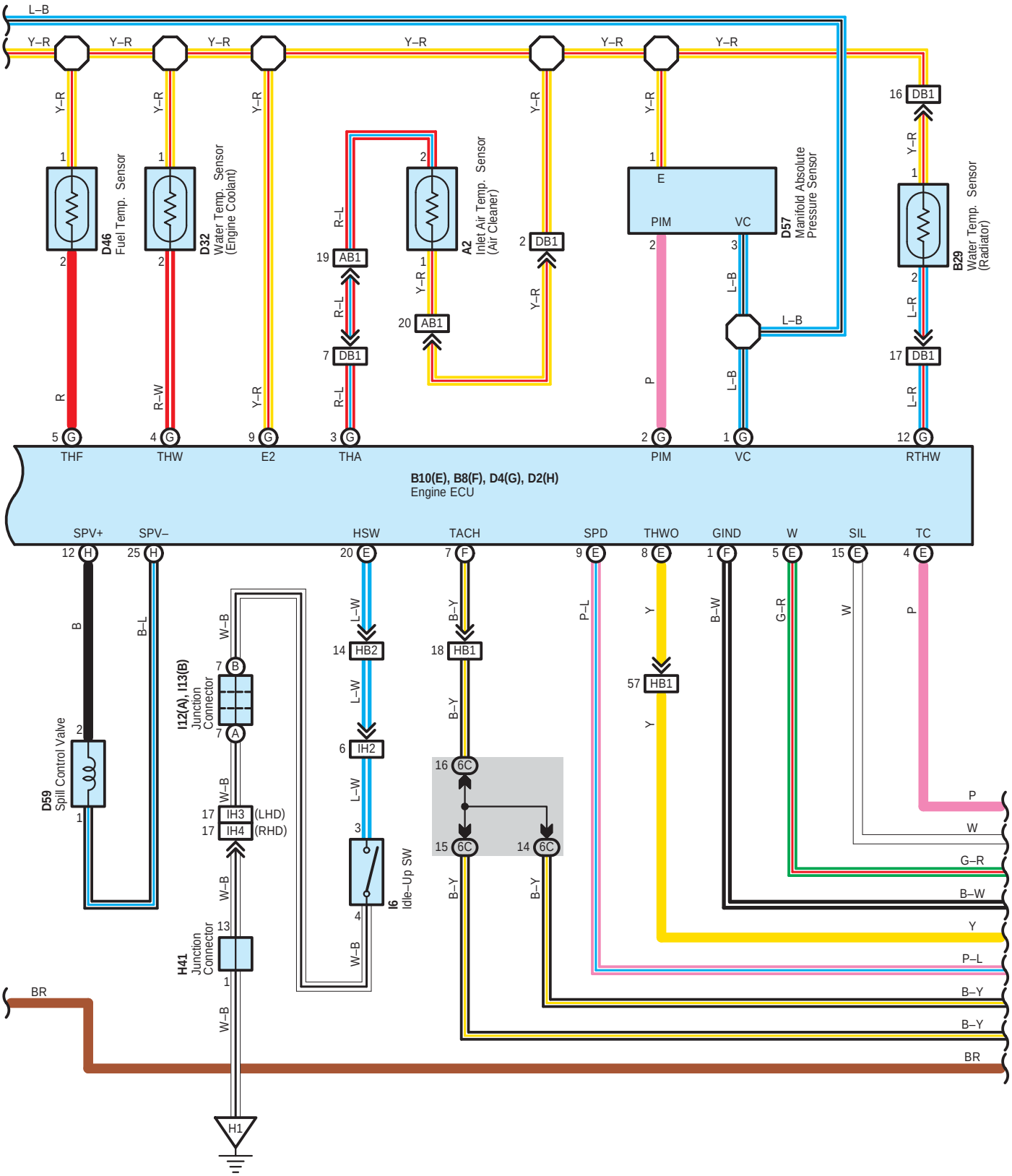
L–B
Y–R
D46 Fuel Temp. Sensor
D32 Water Temp. Sensor (Engine Coolant)
A2 Inlet Air Temp. Sensor (Air Cleaner)
D57 Manifold Absolute Pressure Sensor
B29 Water Temp. Sensor (Radiator)
R
R–W
R–L
L–B
L–R
P
THF
THW
E2
THA
PIM
VC
RTHW
B10(E), B8(F), D4(G), D2(H)
Engine ECU
SPV+
SPV–
HSW
TACH
SPD
THWO
GIND
W
SIL
TC
B
B–L
W–B
L–W
B–Y
P–L
Y
B–W
G–R
W
P
D59 Spill Control Valve
I12(A), I13(B) Junction Connector
I6 Idle–Up SW
H41 Junction Connector
(LHD)
(RHD)
BR
H1

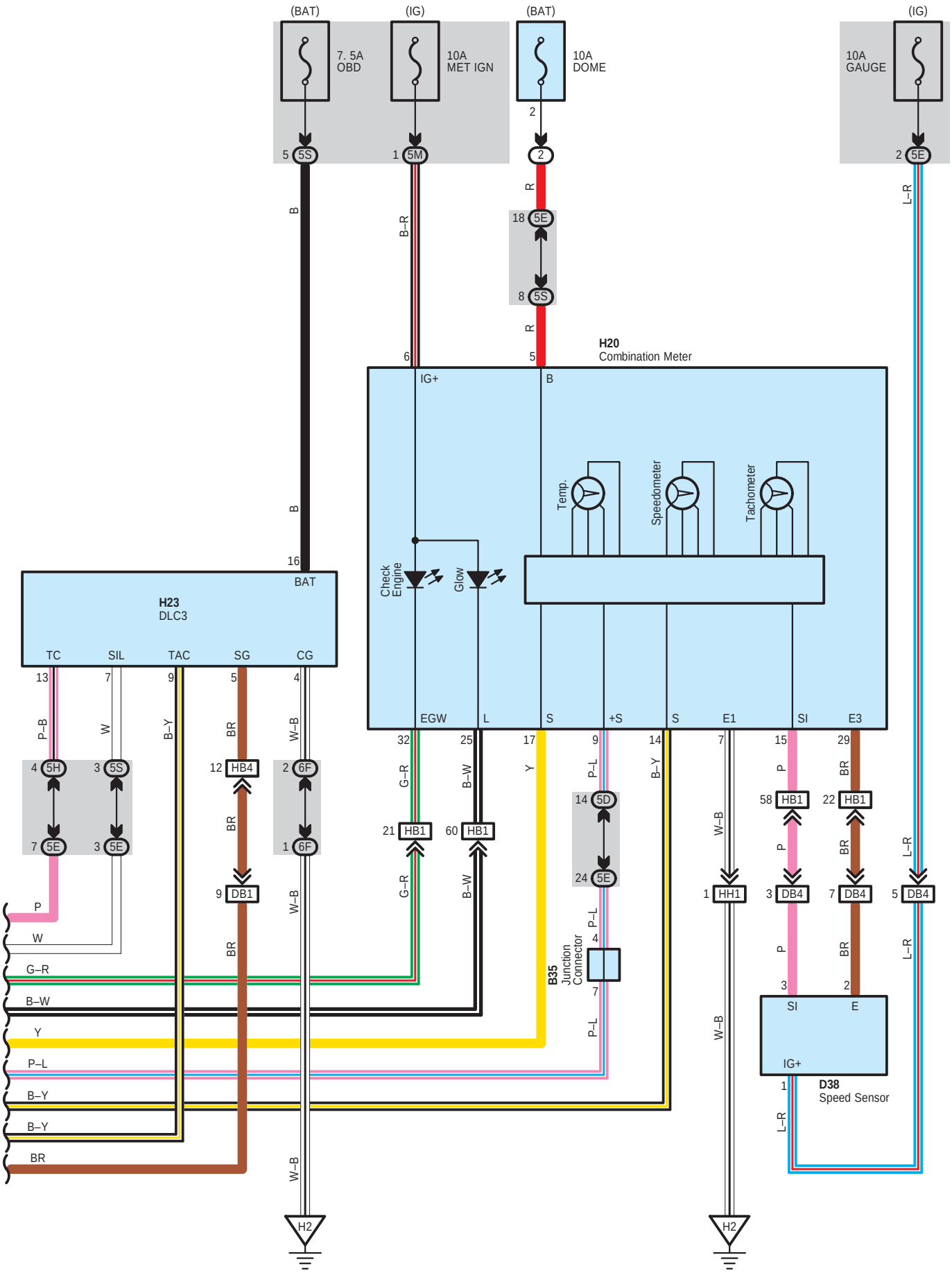
(BAT)
(IG)
(BAT)
(IG)
7. 5A
OBD
10A
MET IGN
10A
DOME
10A
GAUGE
5 5S
1 5M
2
2 5E
R
18 5E
8 5S
R
B
B–R
L–R
H20
Combination Meter
6
5
IG+
B
Temp.
Speedometer
Tachometer
Check
Engine
Glow
B
16
BAT
H23
DLC3
TC
SIL
TAC
SG
CG
EGW
L
S
+S
S
E1
SI
E3
13
7
9
5
4
32
25
17
9
14
7
15
29
P–B
W
B–Y
BR
W–B
G–R
B–W
Y
P–L
B–Y
W–B
P
BR
4 5H
3 5S
7 5E
3 5E
12 HB4
2 6F
1 6F
9 DB1
21 HB1
60 HB1
14 5D
24 5E
1 HH1
58 HB1
22 HB1
3 DB4
7 DB4
5 DB4
B35
Junction
Connector
4
7
3
2
SI
E
IG+
1
D38
Speed Sensor
H2
H2

**System Outline**

The engine control system utilizes a microcomputer and maintains overall control of the engine, etc. An outline of the engine control is given here.

**1. Input Signals**

(1) Water temp. signal system

The water temp. sensor (Engine coolant) detects the engine coolant temp. and has a built–in thermistor with a resistance which varies according to the engine coolant temp. Thus the engine coolant temp. is input in the form of a control signal to TERMINAL THW of the engine ECU.

(2) Intake air temp. signal system

The inlet air temp. sensor (Air cleaner) is detects the intake air temp., which is input as a control signal to TERMINAL THA of the engine ECU.

(3) RPM signal system

Crankshaft position and camshaft position are detected by the crankshaft position sensor and engine speed sensor. Crankshaft position is input as a control signal to TERMINAL TDC+ of the engine ECU, and RPM is input to TERMINAL NE+.

(4) Throttle signal system

The accelerator position sensor detects the accelerator pedal opening angle, which is input as a control signal to TERMINALS VPA, VPA2 of the engine ECU.

(5) Vehicle speed signal system

The speed sensor detects the vehicle speed and input a control signal to TERMINAL SP1 of the engine ECU via the combination meter.

(6) A/C SW signal system

The operating voltage of the A/C amplifier is detected and input in the form of a control signal to TERMINAL AC1 of the engine ECU.

(7) Battery signal system

Voltage is constantly applied to TERMINAL BATT of the engine ECU. When the ignition SW is turned to on, voltage for engine ECU operation is applied via the MAIN relay to TERMINAL +B of the engine ECU.

(8) STA signal system

To confirm that the engine is cranking, the voltage applied to the starter motor during cranking is detected and is input as a control signal to TERMINAL STA of the engine ECU.

(9) Fuel temp. signal system

The fuel temp. sensor is detects the fuel temp., which is input as a control signal to TERMINAL THF of the engine ECU.

(10) Intake air vacuum pressure signal system

Intake air vacuum pressure is detected by the manifold absolute pressure sensor and is input as a control signal to TERMINAL PIM of the engine ECU.

**2. Control System**

* Fuel injection volume control system
  The fuel injection volume control system monitors the engine conditions through the signals input from each sensors to the engine ECU. Engine ECU has basic data and the program (Memorized in the engine ECU) and decides the most appropriate fuel injection volume, and outputs the current to the TERMINAL SPV+ of the engine ECU, causing the spill control valve to operate it.
* Fuel injection timing control system
  The fuel injection timing control system monitors the engine conditions through the signals input from each sensors to the engine ECU. Engine ECU has basic data and the program (Memorized in the engine ECU) and decides the most appropriate fuel injection timing, and outputs the current to the TERMINAL TCV of the engine ECU, causing the timing control valve to operate it.
* GLOW relay control system
  When the engine starts, the GLOW relay is controlled in response to engine coolant temp. At that time, the engine ECU receives the signals, and the current is output to the TERMINALS SREL and GIND.
  As a result, the engine ECU controls the GLOW relay and makes the glow indicator light come on.
* A/C cut control system
  When the vehicle suddenly accelerates from low engine speed, this system cuts off air conditioner operation for a fixed period of time in response to the vehicle speed, throttle valve opening angle and intake manifold pressure in order to maintain acceleration performance.
  The engine ECU receives input signals, and outputs signals to TERMINAL ACT.

**3. Diagnosis System**

With the diagnosis system, when there is a malfunctioning in the engine ECU signal system, the malfunction system is recorded in the memory. The malfunctioning system can be found by reading the display (Code) of the check engine warning light.

**4. Fail–Safe System**

When a malfunction occurs in any system, if there is a possibility of engine trouble being caused by continued control based on the signals from that system, the fail–safe system either controls the system by using data (Standard values) recorded in the engine ECU memory or else stops the engine.

**○ : Parts Location**

| Code | See Page | Code | See Page | Code | See Page |
|---|---|---|---|---|---|
| A2 | 48 (LHD) | D6 B | 46 (*3) | D61 | 46 (*3) |
| | 56 (RHD) | | 54 (*6) | | 54 (*6) |
| A5 | 48 (LHD) | D18 | 46 (*3) | D62 | 46 (*3) |
| | 56 (RHD) | | 54 (*6) | | 54 (*6) |
| B1 | 48 (LHD) | D32 | 46 (*3) | D63 | 46 (*3) |
| | 56 (RHD) | | 54 (*6) | | 54 (*6) |
| B2 | 48 (LHD) | D38 | 46 (*3) | H19 | 49 (LHD) |
| | 56 (RHD) | | 54 (*6) | | 57 (RHD) |
| B8 F | 46 (*3) | D43 | 46 (*3) | H20 | 49 (LHD) |
| | 54 (*6) | | 54 (*6) | | 57 (RHD) |
| B10 E | 46 (*3) | D46 | 46 (*3) | H23 | 49 (LHD) |
| | 54 (*6) | | 54 (*6) | | 57 (RHD) |
| B29 | 46 (*3) | D54 | 46 (*3) | H41 | 49 (LHD) |
| | 54 (*6) | | 54 (*6) | | 57 (RHD) |
| B34 | 48 (LHD) | D57 | 46 (*3) | I6 | 48 (LHD) |
| | 56 (RHD) | | 54 (*6) | | 56 (RHD) |
| B35 | 46 (*3) | D58 | 46 (*3) | I12 A | 48 (LHD) |
| | 54 (*6) | | 54 (*6) | | 56 (RHD) |
| D2 H | 46 (*3) | D59 | 46 (*3) | I13 B | 48 (LHD) |
| | 54 (*6) | | 54 (*6) | | 56 (RHD) |
| D4 G | 46 (*3) | D60 | 46 (*3) | | |
| | 54 (*6) | | 54 (*6) | | |

* 1 : LHD 2TR–FE * 2 : LHD 2KD–FTV * 3 : LHD 5L–E * 4 : RHD 2TR–FE * 5 : RHD 2KD–FTV * 6 : RHD 5L–E * 7 : 2TR–FE
* 8 : 2KD–FTV, 5L–E

**: Relay Blocks**

| Code | See Page | Relay Blocks (Relay Block Location) |
|---|---|---|
| 1 | 23 (*8) | Engine Room R/B No.1 (Engine Compartment Front) |
| 2 | 28 | Engine Room R/B No.2 (Inside of Battery Room) |
| 4 | 29 | Instrument Panel R/B (Under the Glove Box) |

**: Junction Block and Wire Harness Connector**

| Code | See Page | Junction Block and Wire Harness (Connector Location) |
|---|---|---|
| 1E | 24 | Engine Room Main Wire and Engine Room J/B No.1 (Engine Compartment Front) |
| 1J | 25 | |
| 5D | 30 | Instrument Panel Wire and Instrument Panel J/B (Left Side of Instrument Panel) |
| 5E | 30 | Engine Room Main Wire and Instrument Panel J/B (Left Side of Instrument Panel) |
| 5H | 30 | Instrument Panel Wire and Instrument Panel J/B (Left Side of Instrument Panel) |
| 5J | | |
| 5M | 31 | |
| 5S | | |
| 6C | 38 (LHD) | Instrument Panel Wire and Center J/B (Instrument Panel Reinforcement LH) |
| | 38 (RHD) | Instrument Panel Wire and Center J/B (Instrument Panel Reinforcement RH) |
| 6F | 38 (LHD) | Instrument Panel Wire and Center J/B (Instrument Panel Reinforcement LH) |
| | 38 (RHD) | Instrument Panel Wire and Center J/B (Instrument Panel Reinforcement RH) |

**: Connector Joining Wire Harness and Wire Harness**

| Code | See Page | Joining Wire Harness and Wire Harness (Connector Location) |
|---|---|---|
| AB1 | 64 (LHD) | Cowl to Head Lamp Wire and Engine Room Main Wire (Left Side of the Instrument Panel J/B) |
| | 72 (RHD) | |
| DB1 | 62 (*3) | Engine Wire and Engine Room Main Wire (Front Side of Engine Room R/B No.1) |
| | 70 (*6) | |
| DB4 | 62 (*3) | |
| | 70 (*6) | |
| HB1 | 64 (LHD) | Instrument Panel Wire and Engine Room Main Wire (Under the Instrument Panel J/B) |
| | 72 (RHD) | |
| HB2 | 64 (LHD) | |
| | 72 (RHD) | |
| HB4 | 64 (LHD) | |
| | 72 (RHD) | |
| HH1 | 64 (LHD) | Instrument Panel Wire and Instrument Panel Wire (Near the Steering Column) |
| | 72 (RHD) | Instrument Panel Wire and Instrument Panel Wire (Instrument Panel Reinforcement RH) |
| IH2 | 64 (LHD) | Instrument Panel No.2 Wire and Instrument Panel Wire (Instrument Panel Reinforcement LH) |
| | 72 (RHD) | |
| IH3 | 64 (LHD) | Instrument Panel No.2 Wire and Instrument Panel Wire (Instrument Panel Reinforcement RH) |
| IH4 | 72 (RHD) | |

* 1 : LHD 2TR–FE * 2 : LHD 2KD–FTV * 3 : LHD 5L–E * 4 : RHD 2TR–FE * 5 : RHD 2KD–FTV * 6 : RHD 5L–E * 7 : 2TR–FE
* 8 : 2KD–FTV, 5L–E

▽ : **Ground Points**

| Code | See Page | Ground Points Location |
|---|---|---|
| A1 | 64 (LHD) | Dash Panel Right |
| | 72 (RHD) | |
| B2 | 62 (*3) | Front Floor Panel Right |
| | 70 (*6) | |
| D4 | 62 (*3) | Engine Block |
| | 70 (*6) | |
| H1 | 64 (LHD) | Instrument Panel Reinforcement |
| | 72 (RHD) | |
| H2 | 64 (LHD) | |
| | 72 (RHD) | |

* 1 : LHD 2TR–FE * 2 : LHD 2KD–FTV * 3 : LHD 5L–E * 4 : RHD 2TR–FE * 5 : RHD 2KD–FTV * 6 : RHD 5L–E * 7 : 2TR–FE
* 8 : 2KD–FTV, 5L–E

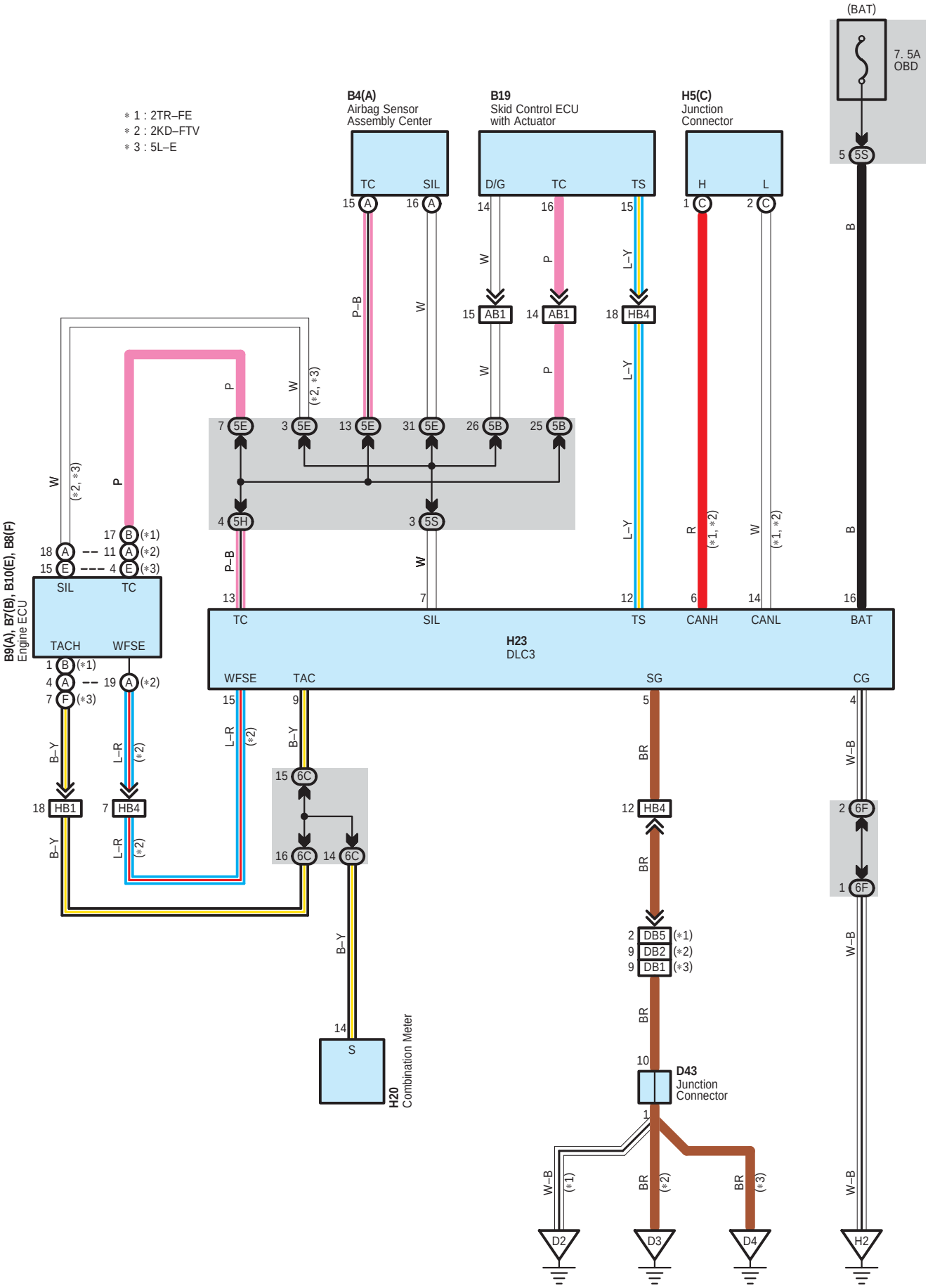
＊1 : 2TR–FE
＊2 : 2KD–FTV
＊3 : 5L–E
(BAT)
7. 5A
OBD
B4(A)
Airbag Sensor
Assembly Center
B19
Skid Control ECU
with Actuator
H5(C)
Junction
Connector
TC
SIL
D/G
TC
TS
H
L
B9(A), B7(B), B10(E), B8(F)
Engine ECU
SIL
TC
TACH
WFSE
H23
DLC3
TC
SIL
TS
CANH
CANL
BAT
WFSE
TAC
SG
CG
H20
Combination Meter
S
D43
Junction
Connector
HB1
HB4
AB1
DB5
DB2
DB1
D2
D3
D4
H2

## : Parts Location

| Code | | See Page | Code | See Page | Code | | See Page |
|---|---|---|---|---|---|---|---|
| B4 | A | 48 (LHD) | B19 | 44 (*1) | D43 | | 53 (*5) |
| | | 56 (RHD) | | 45 (*2) | | | 54 (*6) |
| B7 | B | 44 (*1) | | 46 (*3) | H5 | C | 42, 49 (LHD) |
| | | 52 (*4) | | 52 (*4) | | | 42, 57 (RHD) |
| B8 | F | 46 (*3) | | 53 (*5) | H20 | | 49 (LHD) |
| | | 54 (*6) | | 54 (*6) | | | 57 (RHD) |
| B9 | A | 45 (*2) | D43 | 44 (*1) | H23 | | 49 (LHD) |
| | | 53 (*5) | | 45 (*2) | | | 57 (RHD) |
| B10 | E | 46 (*3) | | 46 (*3) | | | |
| | | 54 (*6) | | 52 (*4) | | | |

## : Junction Block and Wire Harness Connector

| Code | See Page | Junction Block and Wire Harness (Connector Location) |
|---|---|---|
| 5B | 30 | Cowl to Head Lamp Wire and Instrument Panel J/B (Left Side of Instrument Panel) |
| 5E | 30 | Engine Room Main Wire and Instrument Panel J/B (Left Side of Instrument Panel) |
| 5H | 30 | Instrument Panel Wire and Instrument Panel J/B (Left Side of Instrument Panel) |
| 5S | 31 | |
| 6C | 38 (LHD) | Instrument Panel Wire and Center J/B (Instrument Panel Reinforcement LH) |
| | 38 (RHD) | Instrument Panel Wire and Center J/B (Instrument Panel Reinforcement RH) |
| 6F | 38 (LHD) | Instrument Panel Wire and Center J/B (Instrument Panel Reinforcement LH) |
| | 38 (RHD) | Instrument Panel Wire and Center J/B (Instrument Panel Reinforcement RH) |

## : Connector Joining Wire Harness and Wire Harness

| Code | See Page | Joining Wire Harness and Wire Harness (Connector Location) |
|---|---|---|
| AB1 | 64 (LHD) | Cowl to Head Lamp Wire and Engine Room Main Wire (Left Side of the Instrument Panel J/B) |
| | 72 (RHD) | |
| DB1 | 62 (*3) | Engine Wire and Engine Room Main Wire (Front Side of Engine Room R/B No.1) |
| | 70 (*6) | |
| DB2 | 61 (*2) | |
| | 69 (*5) | |
| DB5 | 60 (*1) | |
| | 68 (*4) | |
| HB1 | 64 (LHD) | Instrument Panel Wire and Engine Room Main Wire (Under the Instrument Panel J/B) |
| | 72 (RHD) | |
| HB4 | 64 (LHD) | |
| | 72 (RHD) | |

## : Ground Points

| Code | See Page | Ground Points Location |
|---|---|---|
| D2 | 60 (*1) | Engine Block |
| | 68 (*4) | |
| D3 | 61 (*2) | |
| | 69 (*5) | |
| D4 | 62 (*3) | |
| | 70 (*6) | |
| H2 | 64 (LHD) | Instrument Panel Reinforcement |
| | 72 (RHD) | |

* 1 : LHD 2TR–FE * 2 : LHD 2KD–FTV * 3 : LHD 5L–E * 4 : RHD 2TR–FE * 5 : RHD 2KD–FTV * 6 : RHD 5L–E * 7 : 2TR–FE
* 8 : 2KD–FTV, 5L–E

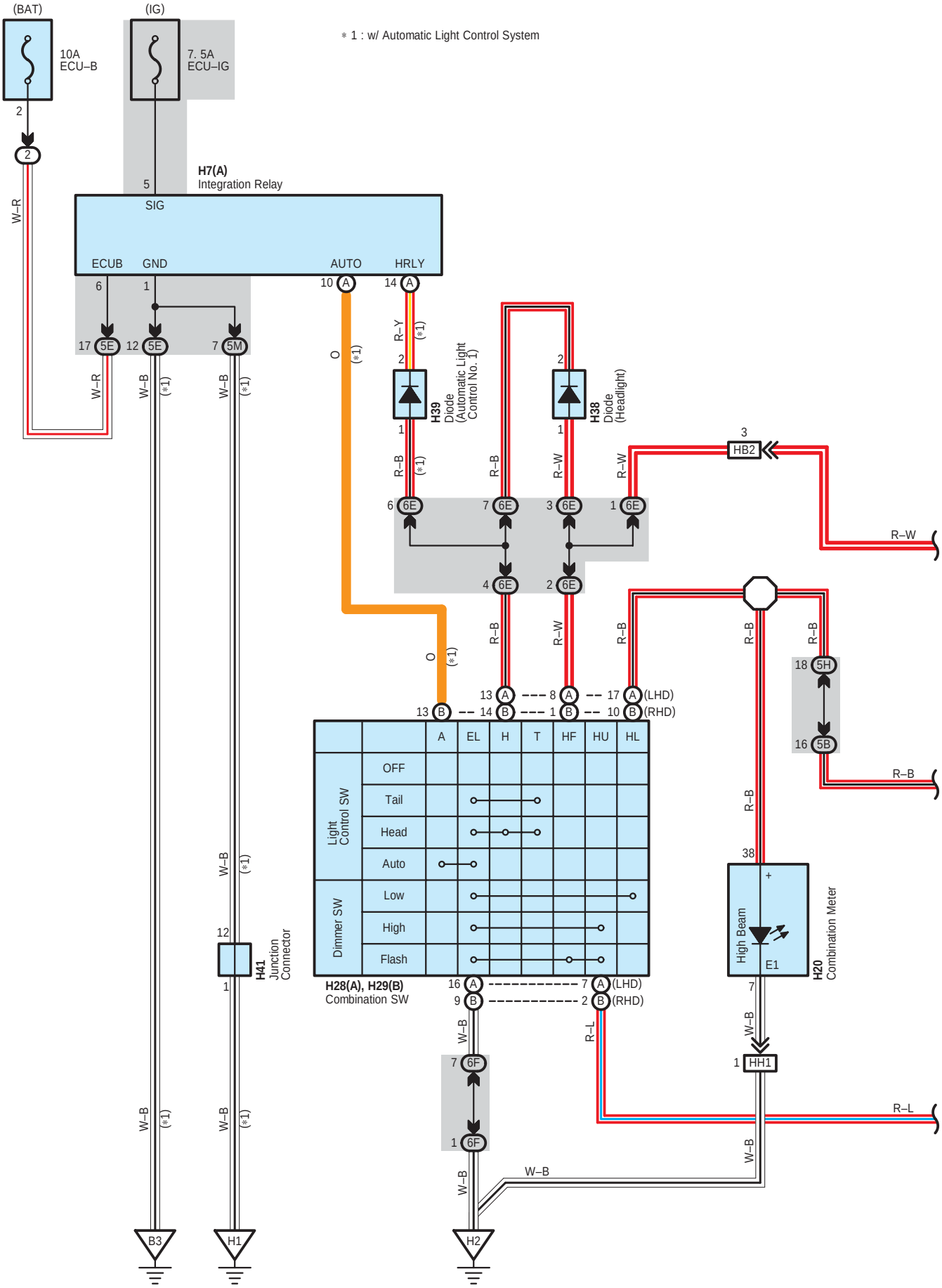
(BAT)
10A
ECU–B
(IG)
7. 5A
ECU–IG
* 1 : w/ Automatic Light Control System
H7(A)
Integration Relay
SIG
ECUB
GND
AUTO
HRLY
H39
Diode
(Automatic Light
Control No. 1)
H38
Diode
(Headlight)
HB2
R–W
R–B
R–Y
O
W–R
W–B
(*1)
H41
Junction
Connector
H28(A), H29(B)
Combination SW
Light
Control SW
Dimmer SW
OFF
Tail
Head
Auto
Low
High
Flash
A
EL
H
T
HF
HU
HL
(LHD)
(RHD)
High Beam
H20
Combination Meter
E1
R–L
HH1
B3
H1
H2

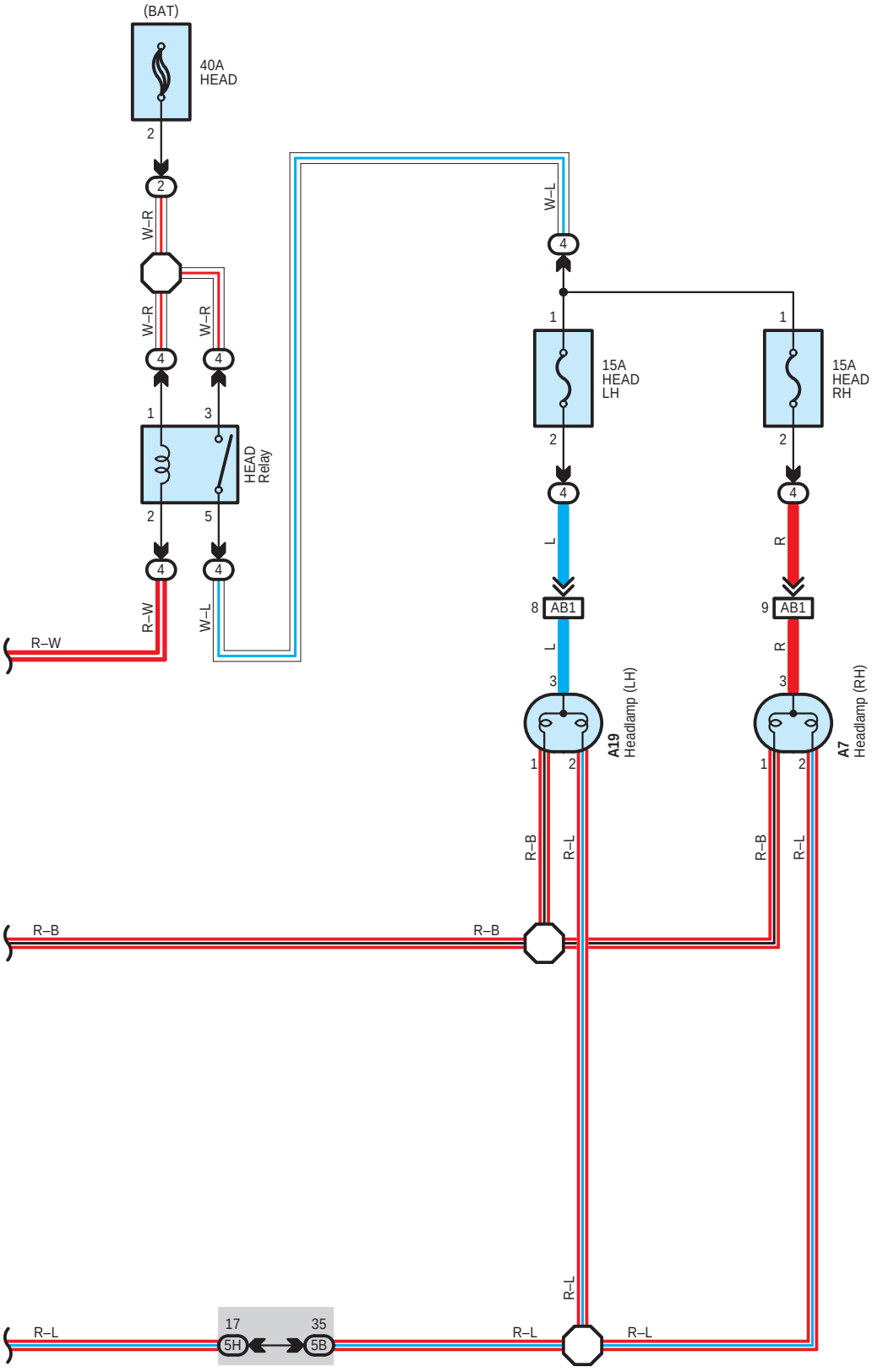
(BAT)
40A
HEAD
2
2
W–R
W–R
W–R
4
4
1
3
HEAD
Relay
2
5
4
4
R–W
R–W
W–L
W–L
4
1
15A
HEAD
LH
2
4
L
8
AB1
L
3
A19
Headlamp (LH)
1
2
R–B
R–L
1
15A
HEAD
RH
2
4
R
9
AB1
R
3
A7
Headlamp (RH)
1
2
R–B
R–L
R–B
R–B
R–L
R–L
R–L
17
5H
35
5B
R–L
R–L

# Headlight

**: Parts Location**

| Code | See Page | Code | See Page | Code | See Page |
|---|---|---|---|---|---|
| A7 | 48 (LHD) | H7 A | 57 (RHD) | H38 | 49 (LHD) |
| | 56 (RHD) | H20 | 49 (LHD) | | 57 (RHD) |
| A19 | 48 (LHD) | | 57 (RHD) | H39 | 57 (RHD) |
| | 56 (RHD) | H28 A | 49 (LHD) | H41 | 49 (LHD) |
| H7 A | 49 (LHD) | H29 B | 57 (RHD) | | 57 (RHD) |

**: Relay Blocks**

| Code | See Page | Relay Blocks (Relay Block Location) |
|---|---|---|
| 2 | 28 | Engine Room R/B No.2 (Inside of Battery Room) |
| 4 | 29 | Instrument Panel R/B (Under the Glove Box) |

**: Junction Block and Wire Harness Connector**

| Code | See Page | Junction Block and Wire Harness (Connector Location) |
|---|---|---|
| 5B | 30 | Cowl to Head Lamp Wire and Instrument Panel J/B (Left Side of Instrument Panel) |
| 5E | 30 | Engine Room Main Wire and Instrument Panel J/B (Left Side of Instrument Panel) |
| 5H | 30 | Instrument Panel Wire and Instrument Panel J/B (Left Side of Instrument Panel) |
| 5M | 31 | |
| 6E | 38 (LHD) | Instrument Panel Wire and Center J/B (Instrument Panel Reinforcement LH) |
| | 38 (RHD) | Instrument Panel Wire and Center J/B (Instrument Panel Reinforcement RH) |
| 6F | 38 (LHD) | Instrument Panel Wire and Center J/B (Instrument Panel Reinforcement LH) |
| | 38 (RHD) | Instrument Panel Wire and Center J/B (Instrument Panel Reinforcement RH) |

**: Connector Joining Wire Harness and Wire Harness**

| Code | See Page | Joining Wire Harness and Wire Harness (Connector Location) |
|---|---|---|
| AB1 | 64 (LHD) | Cowl to Head Lamp Wire and Engine Room Main Wire (Left Side of the Instrument Panel J/B) |
| | 72 (RHD) | |
| HB2 | 64 (LHD) | Instrument Panel Wire and Engine Room Main Wire (Under the Instrument Panel J/B) |
| | 72 (RHD) | |
| HH1 | 64 (LHD) | Instrument Panel Wire and Instrument Panel Wire (Near the Steering Column) |
| | 72 (RHD) | Instrument Panel Wire and Instrument Panel Wire (Instrument Panel Reinforcement RH) |

**: Ground Points**

| Code | See Page | Ground Points Location |
|---|---|---|
| B3 | 68 (*4) | Front Floor Panel Left |
| H1 | 72 (RHD) | Instrument Panel Reinforcement |
| H2 | 64 (LHD) | |
| | 72 (RHD) | |

* 1 : LHD 2TR–FE * 2 : LHD 2KD–FTV * 3 : LHD 5L–E * 4 : RHD 2TR–FE * 5 : RHD 2KD–FTV * 6 : RHD 5L–E * 7 : 2TR–FE
* 8 : 2KD–FTV, 5L–E

# Front Fog Light

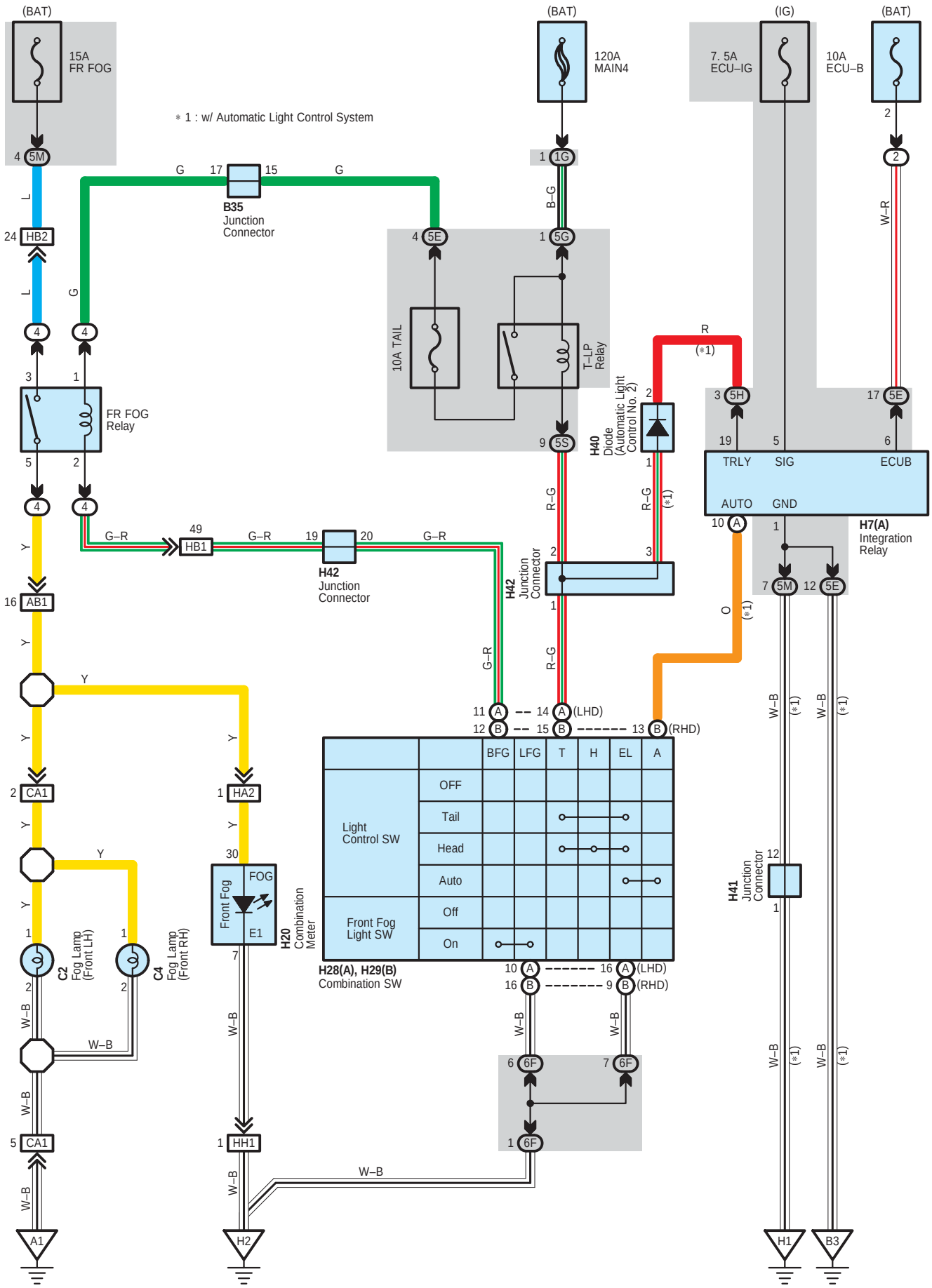

### : Parts Location

| Code | See Page | Code | See Page | Code | See Page |
|---|---|---|---|---|---|
| B35 | 44 (*1) | C4 | 48 (LHD) | H29 B | 57 (RHD) |
| | 45 (*2) | | 56 (RHD) | H40 | 57 (RHD) |
| | 52 (*4) | H7 A | 57 (RHD) | H41 | 57 (RHD) |
| | 53 (*5) | H20 | 49 (LHD) | H42 | 49 (LHD) |
| C2 | 48 (LHD) | | 57 (RHD) | | 57 (RHD) |
| | 56 (RHD) | H28 A | 49 (LHD) | | |

### : Relay Blocks

| Code | See Page | Relay Blocks (Relay Block Location) |
|---|---|---|
| 2 | 28 | Engine Room R/B No.2 (Inside of Battery Room) |
| 4 | 29 | Instrument Panel R/B (Under the Glove Box) |

### : Junction Block and Wire Harness Connector

| Code | See Page | Junction Block and Wire Harness (Connector Location) |
|---|---|---|
| 1G | 24 | Engine Room Main Wire and Engine Room J/B No.1 (Engine Compartment Front) |
| 5E | 30 | Engine Room Main Wire and Instrument Panel J/B (Left Side of Instrument Panel) |
| 5G | | |
| 5H | 30 | Instrument Panel Wire and Instrument Panel J/B (Left Side of Instrument Panel) |
| 5M | 31 | |
| 5S | | |
| 6F | 38 (LHD) | Instrument Panel Wire and Center J/B (Instrument Panel Reinforcement LH) |
| | 38 (RHD) | Instrument Panel Wire and Center J/B (Instrument Panel Reinforcement RH) |

### : Connector Joining Wire Harness and Wire Harness

| Code | See Page | Joining Wire Harness and Wire Harness (Connector Location) |
|---|---|---|
| AB1 | 64 (LHD) | Cowl to Head Lamp Wire and Engine Room Main Wire (Left Side of the Instrument Panel J/B) |
| | 72 (RHD) | |
| CA1 | 64 (LHD) | Engine Room No.4 Wire and Cowl to Head Lamp Wire (Dash Panel Left) |
| | 72 (RHD) | |
| HA2 | 64 (LHD) | Instrument Panel Wire and Cowl to Head Lamp Wire (Under the Instrument Panel J/B) |
| | 72 (RHD) | |
| HB1 | 64 (LHD) | Instrument Panel Wire and Engine Room Main Wire (Under the Instrument Panel J/B) |
| | 72 (RHD) | |
| HB2 | 64 (LHD) | |
| | 72 (RHD) | |
| HH1 | 64 (LHD) | Instrument Panel Wire and Instrument Panel Wire (Near the Steering Column) |
| | 72 (RHD) | Instrument Panel Wire and Instrument Panel Wire (Instrument Panel Reinforcement RH) |

### : Ground Points

| Code | See Page | Ground Points Location |
|---|---|---|
| A1 | 64 (LHD) | Dash Panel Right |
| | 72 (RHD) | |
| B3 | 68 (*4) | Front Floor Panel Left |
| H1 | 72 (RHD) | Instrument Panel Reinforcement |
| H2 | 64 (LHD) | |
| | 72 (RHD) | |

* 1 : LHD 2TR–FE * 2 : LHD 2KD–FTV * 3 : LHD 5L–E * 4 : RHD 2TR–FE * 5 : RHD 2KD–FTV * 6 : RHD 5L–E * 7 : 2TR–FE
* 8 : 2KD–FTV, 5L–E

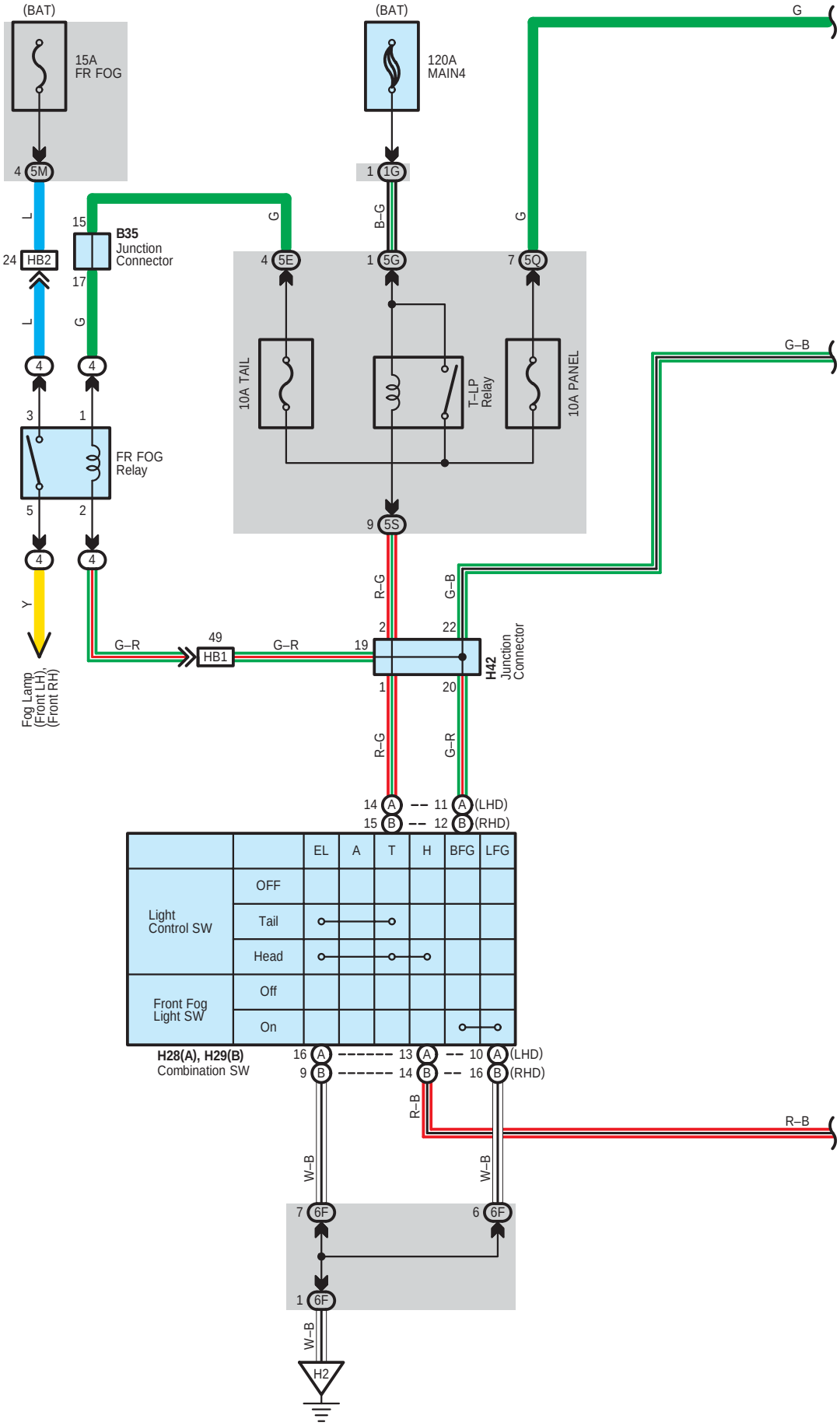
(BAT)
15A
FR FOG
4 5M
L
15
B35
Junction
Connector
24 HB2
17
L
G
4
4
3
1
FR FOG
Relay
5
2
4
4
Y
Fog Lamp
(Front LH),
(Front RH)
G–R
49
HB1
G–R
(BAT)
120A
MAIN4
1 1G
B–G
G
4 5E
1 5G
7 5Q
10A TAIL
T–LP
Relay
10A PANEL
9 5S
R–G
G–B
2
22
19
H42
Junction
Connector
1
20
R–G
G–R
14 A
15 B
11 A (LHD)
12 B (RHD)
EL
A
T
H
BFG
LFG
Light
Control SW
OFF
Tail
Head
Front Fog
Light SW
Off
On
H28(A), H29(B)
Combination SW
16 A
9 B
13 A
14 B
10 A (LHD)
16 B (RHD)
R–B
G–B
R–B
W–B
W–B
7 6F
6 6F
1 6F
W–B
H2

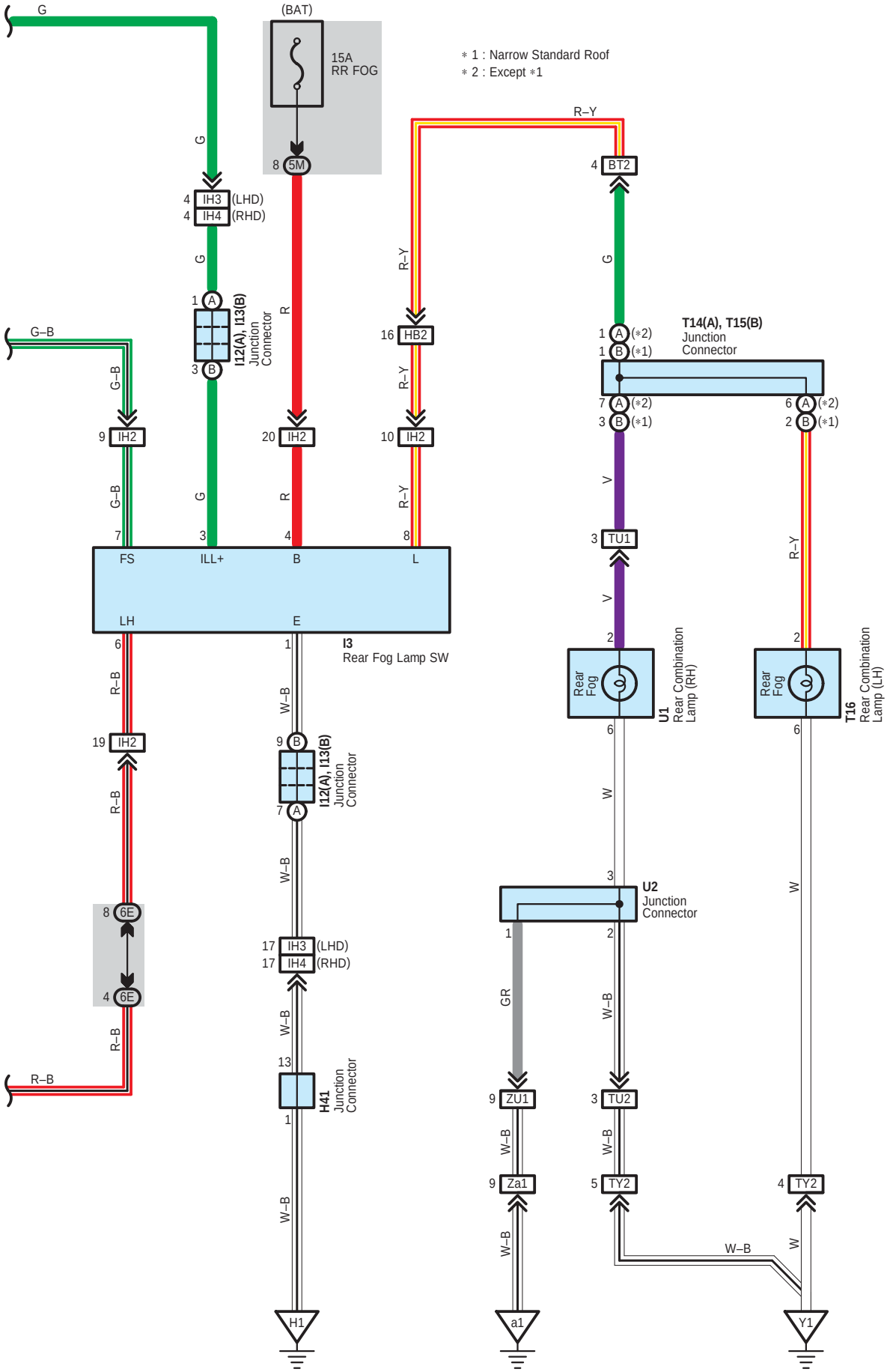
(BAT)
15A
RR FOG
8 5M
G
4 IH3 (LHD)
4 IH4 (RHD)
G
1 A
3 B
I12(A), I13(B)
Junction
Connector
R
20 IH2
G–B
9 IH2
G–B
7
FS
3
ILL+
4
B
R–Y
16 HB2
R–Y
10 IH2
R–Y
8
L
LH
E
I3
Rear Fog Lamp SW
6
R–B
19 IH2
R–B
8 6E
4 6E
R–B
R–B
1
W–B
9 B
7 A
I12(A), I13(B)
Junction
Connector
W–B
17 IH3 (LHD)
17 IH4 (RHD)
W–B
13
H41
Junction
Connector
1
W–B
H1
R–Y
4 BT2
G
1 A (*2)
1 B (*1)
T14(A), T15(B)
Junction
Connector
7 A (*2)
3 B (*1)
6 A (*2)
2 B (*1)
V
3 TU1
V
2
Rear
Fog
U1
Rear Combination
Lamp (RH)
6
W
3
U2
Junction
Connector
1
2
GR
W–B
9 ZU1
3 TU2
W–B
W–B
9 Za1
5 TY2
W–B
W–B
a1
R–Y
2
Rear
Fog
T16
Rear Combination
Lamp (LH)
6
W
4 TY2
W
Y1
＊1 : Narrow Standard Roof
＊2 : Except ＊1

# Rear Fog Light

**: Parts Location**

| Code | | See Page | Code | | See Page | Code | | See Page |
|---|---|---|---|---|---|---|---|---|
| B35 | | 44 (*1) | H42 | | 49 (LHD) | T15 | B | 50 (LHD) |
| | | 45 (*2) | | | 57 (RHD) | | | 58 (RHD) |
| | | 46 (*3) | I3 | | 48 (LHD) | T16 | | 50 (LHD) |
| | | 52 (*4) | | | 56 (RHD) | | | 58 (RHD) |
| | | 53 (*5) | I12 | A | 48 (LHD) | U1 | | 51 (LHD) |
| | | 54 (*6) | | | 56 (RHD) | | | 59 (RHD) |
| H28 | A | 49 (LHD) | I13 | B | 48 (LHD) | U2 | | 51 (LHD) |
| H29 | B | 57 (RHD) | | | 56 (RHD) | | | 59 (RHD) |
| H41 | | 49 (LHD) | T14 | A | 50 (LHD) | | | |
| | | 57 (RHD) | | | 58 (RHD) | | | |

**: Relay Blocks**

| Code | See Page | Relay Blocks (Relay Block Location) |
|---|---|---|
| 4 | 29 | Instrument Panel R/B (Under the Glove Box) |

**: Junction Block and Wire Harness Connector**

| Code | See Page | Junction Block and Wire Harness (Connector Location) |
|---|---|---|
| 1G | 24 | Engine Room Main Wire and Engine Room J/B No.1 (Engine Compartment Front) |
| 5E | 30 | Engine Room Main Wire and Instrument Panel J/B (Left Side of Instrument Panel) |
| 5G | | |
| 5M | 31 | Instrument Panel Wire and Instrument Panel J/B (Left Side of Instrument Panel) |
| 5Q | | |
| 5S | | |
| 6E | 38 (LHD) | Instrument Panel Wire and Center J/B (Instrument Panel Reinforcement LH) |
| | 38 (RHD) | Instrument Panel Wire and Center J/B (Instrument Panel Reinforcement RH) |
| 6F | 38 (LHD) | Instrument Panel Wire and Center J/B (Instrument Panel Reinforcement LH) |
| | 38 (RHD) | Instrument Panel Wire and Center J/B (Instrument Panel Reinforcement RH) |

**: Connector Joining Wire Harness and Wire Harness**

| Code | See Page | Joining Wire Harness and Wire Harness (Connector Location) |
|---|---|---|
| BT2 | 64 (LHD) | Engine Room Main Wire and Roof Wire (Cowl Side Panel LH) |
| | 72 (RHD) | |
| HB1 | 64 (LHD) | Instrument Panel Wire and Engine Room Main Wire (Under the Instrument Panel J/B) |
| | 72 (RHD) | |
| HB2 | 64 (LHD) | |
| | 72 (RHD) | |
| IH2 | 64 (LHD) | Instrument Panel No.2 Wire and Instrument Panel Wire (Instrument Panel Reinforcement LH) |
| | 72 (RHD) | |
| IH3 | 64 (LHD) | Instrument Panel No.2 Wire and Instrument Panel Wire (Instrument Panel Reinforcement RH) |
| IH4 | 72 (RHD) | |
| TU1 | 66 (LHD) | Roof Wire and Roof No.2 Wire (Rear of the Left Side of the Roof Panel) |
| | 74 (RHD) | |
| TU2 | 66 (LHD) | |
| | 74 (RHD) | |
| TY2 | 66 (LHD) | Roof Wire and Luggage Room No.3 Wire (Left Quarter Panel) |
| | 74 (RHD) | |
| ZU1 | 66 (LHD) | Back Door No.1 Wire and Roof No.2 Wire (Rear of the Right Side of the Roof Panel) |
| | 74 (RHD) | |
| Za1 | 66 (LHD) | Back Door No.1 Wire and Back Door No.2 Wire (Right Side of Back Door) |
| | 74 (RHD) | |

* 1 : LHD 2TR–FE * 2 : LHD 2KD–FTV * 3 : LHD 5L–E * 4 : RHD 2TR–FE * 5 : RHD 2KD–FTV * 6 : RHD 5L–E * 7 : 2TR–FE
* 8 : 2KD–FTV, 5L–E

▽ : **Ground Points**

| Code | See Page | Ground Points Location |
|---|---|---|
| H1 | 64 (LHD) | Instrument Panel Reinforcement |
| | 72 (RHD) | |
| H2 | 64 (LHD) | |
| | 72 (RHD) | |
| Y1 | 66 (LHD) | Left Quarter Panel |
| | 74 (RHD) | |
| a1 | 66 (LHD) | Back Door Right |
| | 74 (RHD) | |

# Turn Signal and Hazard Warning Light

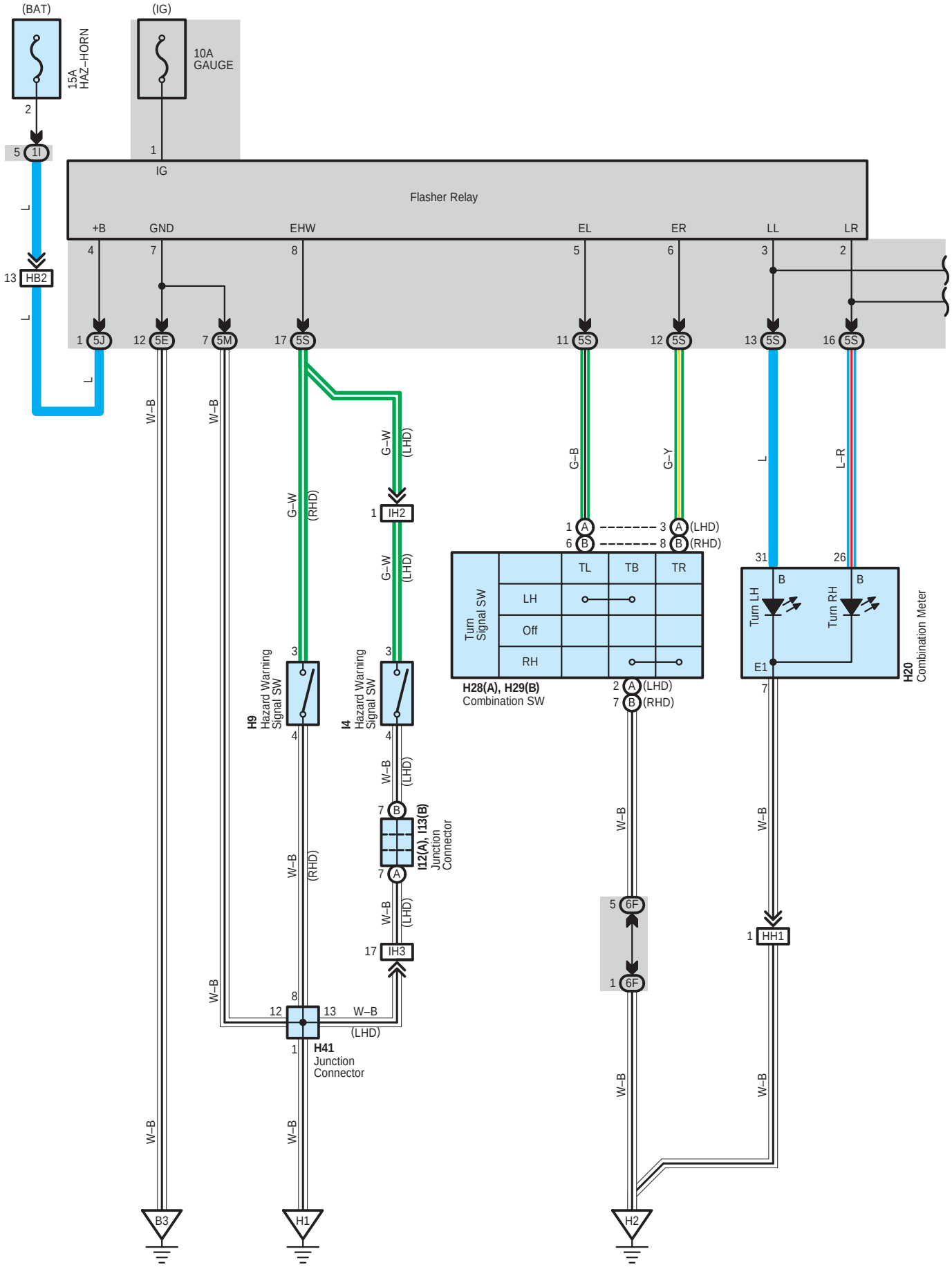

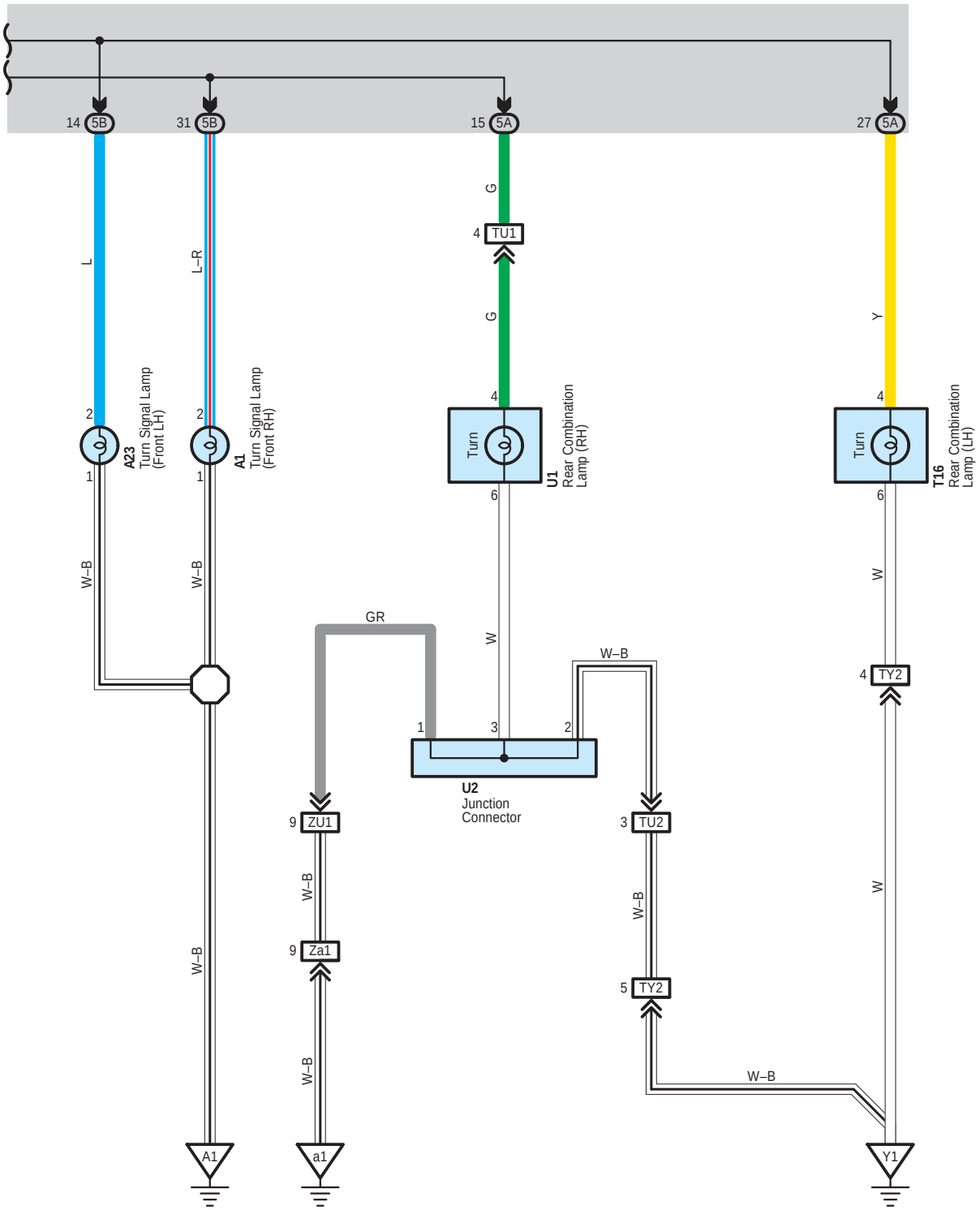
14 5B
31 5B
15 5A
27 5A
L
L–R
G
G
Y
4 TU1
2
1
A23
Turn Signal Lamp (Front LH)
A1
Turn Signal Lamp (Front RH)
4
Turn
U1
Rear Combination Lamp (RH)
T16
Rear Combination Lamp (LH)
6
W–B
W–B
W
W
W
GR
W–B
1
3
2
U2
Junction Connector
9 ZU1
9 Za1
3 TU2
5 TY2
4 TY2
W–B
W–B
W–B
W
W–B
A1
a1
Y1

# Turn Signal and Hazard Warning Light

**○ : Parts Location**

| Code | See Page | Code | See Page | Code | See Page |
|---|---|---|---|---|---|
| A1 | 48 (LHD) | H29 B | 57 (RHD) | T16 | 50 (LHD) |
| | 56 (RHD) | H41 | 49 (LHD) | | 58 (RHD) |
| A23 | 48 (LHD) | | 57 (RHD) | U1 | 51 (LHD) |
| | 56 (RHD) | I4 | 48 (LHD) | | 59 (RHD) |
| H9 | 57 (RHD) | I12 A | 48 (LHD) | U2 | 51 (LHD) |
| H20 | 49 (LHD) | | 56 (RHD) | | 59 (RHD) |
| | 57 (RHD) | I13 B | 48 (LHD) | | |
| H28 A | 49 (LHD) | | 56 (RHD) | | |

**⬭ : Junction Block and Wire Harness Connector**

| Code | See Page | Junction Block and Wire Harness (Connector Location) |
|---|---|---|
| 1I | 25 | Engine Room Main Wire and Engine Room J/B No.1 (Engine Compartment Front) |
| 5A | 30 | Roof Wire and Instrument Panel J/B (Left Side of Instrument Panel) |
| 5B | 30 | Cowl to Head Lamp Wire and Instrument Panel J/B (Left Side of Instrument Panel) |
| 5E | 30 | Engine Room Main Wire and Instrument Panel J/B (Left Side of Instrument Panel) |
| 5J | 30 | Instrument Panel Wire and Instrument Panel J/B (Left Side of Instrument Panel) |
| 5M | 31 | |
| 5S | | |
| 6F | 38 (LHD) | Instrument Panel Wire and Center J/B (Instrument Panel Reinforcement LH) |
| | 38 (RHD) | Instrument Panel Wire and Center J/B (Instrument Panel Reinforcement RH) |

**▭ : Connector Joining Wire Harness and Wire Harness**

| Code | See Page | Joining Wire Harness and Wire Harness (Connector Location) |
|---|---|---|
| HB2 | 64 (LHD) | Instrument Panel Wire and Engine Room Main Wire (Under the Instrument Panel J/B) |
| | 72 (RHD) | |
| HH1 | 64 (LHD) | Instrument Panel Wire and Instrument Panel Wire (Near the Steering Column) |
| | 72 (RHD) | Instrument Panel Wire and Instrument Panel Wire (Instrument Panel Reinforcement RH) |
| IH2 | 64 (LHD) | Instrument Panel No.2 Wire and Instrument Panel Wire (Instrument Panel Reinforcement LH) |
| IH3 | 64 (LHD) | Instrument Panel No.2 Wire and Instrument Panel Wire (Instrument Panel Reinforcement RH) |
| TU1 | 66 (LHD) | Roof Wire and Roof No.2 Wire (Rear of the Left Side of the Roof Panel) |
| | 74 (RHD) | |
| TU2 | 66 (LHD) | |
| | 74 (RHD) | |
| TY2 | 66 (LHD) | Roof Wire and Luggage Room No.3 Wire (Left Quarter Panel) |
| | 74 (RHD) | |
| ZU1 | 66 (LHD) | Back Door No.1 Wire and Roof No.2 Wire (Rear of the Right Side of the Roof Panel) |
| | 74 (RHD) | |
| Za1 | 66 (LHD) | Back Door No.1 Wire and Back Door No.2 Wire (Right Side of Back Door) |
| | 74 (RHD) | |

▽ : **Ground Points**

| Code | See Page | Ground Points Location |
|---|---|---|
| A1 | 64 (LHD) | Dash Panel Right |
| | 72 (RHD) | |
| B3 | 60 (*1) | Front Floor Panel Left |
| | 61 (*2) | |
| | 62 (*3) | |
| | 68 (*4) | |
| | 69 (*5) | |
| | 70 (*6) | |
| H1 | 64 (LHD) | Instrument Panel Reinforcement |
| | 72 (RHD) | |
| H2 | 64 (LHD) | |
| | 72 (RHD) | |
| Y1 | 66 (LHD) | Left Quarter Panel |
| | 74 (RHD) | |
| a1 | 66 (LHD) | Back Door Right |
| | 74 (RHD) | |

* 1 : LHD 2TR–FE * 2 : LHD 2KD–FTV * 3 : LHD 5L–E * 4 : RHD 2TR–FE * 5 : RHD 2KD–FTV * 6 : RHD 5L–E * 7 : 2TR–FE
* 8 : 2KD–FTV, 5L–E

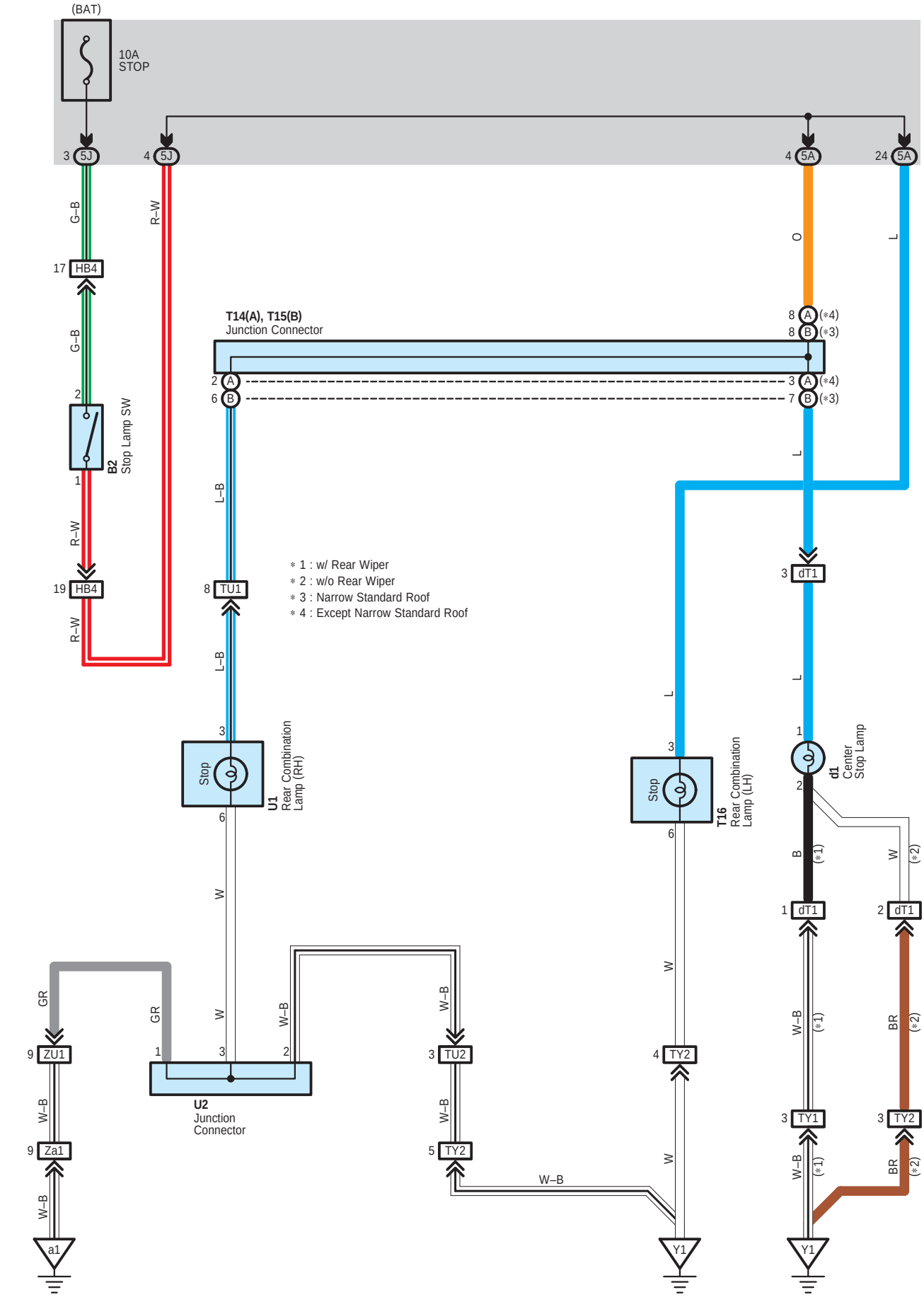
(BAT)
10A
STOP
3 5J
4 5J
4 5A
24 5A
G–B
R–W
O
L
17 HB4
G–B
2
B2
Stop Lamp SW
1
R–W
19 HB4
R–W
T14(A), T15(B)
Junction Connector
8 A (*4)
8 B (*3)
2 A
6 B
3 A (*4)
7 B (*3)
L–B
8 TU1
L
3 dT1
* 1 : w/ Rear Wiper
* 2 : w/o Rear Wiper
* 3 : Narrow Standard Roof
* 4 : Except Narrow Standard Roof
L–B
3
Stop
U1
Rear Combination
Lamp (RH)
6
W
L
3
Stop
T16
Rear Combination
Lamp (LH)
6
1
d1
Center
Stop Lamp
2
B
(*1)
W
(*2)
GR
GR
W
W–B
W–B
W
1 dT1
2 dT1
9 ZU1
1
3
2
3 TU2
4 TY2
W–B
BR
(*1)
(*2)
U2
Junction
Connector
W–B
W–B
3 TY1
3 TY2
9 Za1
5 TY2
W–B
BR
W–B
(*1)
(*2)
W–B
W
W
a1
Y1
Y1

## : Parts Location

| Code | | See Page | Code | | See Page | Code | See Page |
|---|---|---|---|---|---|---|---|
| B2 | | 48 (LHD) | T15 | B | 58 (RHD) | U2 | 51 (LHD) |
| | | 56 (RHD) | T16 | | 50 (LHD) | | 59 (RHD) |
| T14 | A | 50 (LHD) | | | 58 (RHD) | d1 | 51 (LHD) |
| | | 58 (RHD) | U1 | | 51 (LHD) | | 59 (RHD) |
| T15 | B | 50 (LHD) | | | 59 (RHD) | | |

## : Junction Block and Wire Harness Connector

| Code | See Page | Junction Block and Wire Harness (Connector Location) |
|---|---|---|
| 5A | 30 | Roof Wire and Instrument Panel J/B (Left Side of Instrument Panel) |
| 5J | 30 | Instrument Panel Wire and Instrument Panel J/B (Left Side of Instrument Panel) |

## : Connector Joining Wire Harness and Wire Harness

| Code | See Page | Joining Wire Harness and Wire Harness (Connector Location) |
|---|---|---|
| HB4 | 64 (LHD) | Instrument Panel Wire and Engine Room Main Wire (Under the Instrument Panel J/B) |
| | 72 (RHD) | |
| TU1 | 66 (LHD) | Roof Wire and Roof No.2 Wire (Rear of the Left Side of the Roof Panel) |
| | 74 (RHD) | |
| TU2 | 66 (LHD) | |
| | 74 (RHD) | |
| TY1 | 66 (LHD) | Roof Wire and Luggage Room No.3 Wire (Left Quarter Panel) |
| | 74 (RHD) | |
| TY2 | 66 (LHD) | |
| | 74 (RHD) | |
| ZU1 | 66 (LHD) | Back Door No.1 Wire and Roof No.2 Wire (Rear of the Right Side of the Roof Panel) |
| | 74 (RHD) | |
| Za1 | 66 (LHD) | Back Door No.1 Wire and Back Door No.2 Wire (Right Side of Back Door) |
| | 74 (RHD) | |
| dT1 | 66 (LHD) | Back Door No.3 Wire and Roof Wire (Rear of the Left Side of the Roof Panel) |
| | 74 (RHD) | |

## : Ground Points

| Code | See Page | Ground Points Location |
|---|---|---|
| Y1 | 66 (LHD) | Left Quarter Panel |
| | 74 (RHD) | |
| a1 | 66 (LHD) | Back Door Right |
| | 74 (RHD) | |

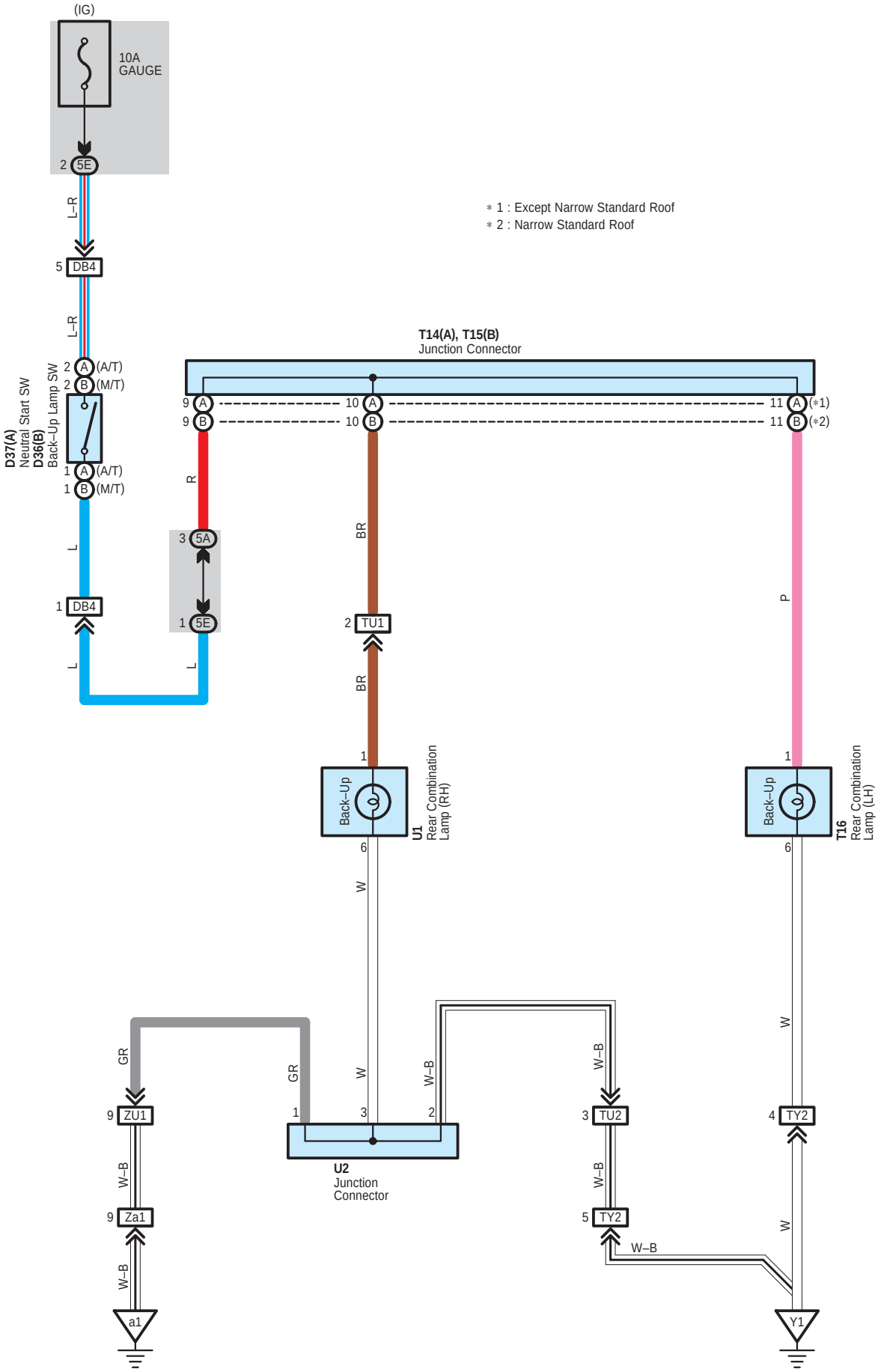
(IG)
10A
GAUGE
2 5E
L–R
5 DB4
L–R
2 A (A/T)
2 B (M/T)
D37(A)
Neutral Start SW
D36(B)
Back–Up Lamp SW
1 A (A/T)
1 B (M/T)
L
1 DB4
L
L
3 5A
1 5E
R
T14(A), T15(B)
Junction Connector
9 A
9 B
10 A
10 B
11 A (*1)
11 B (*2)
BR
2 TU1
BR
1
Back–Up
U1
Rear Combination
Lamp (RH)
6
W
P
1
Back–Up
T16
Rear Combination
Lamp (LH)
6
W
GR
9 ZU1
W–B
9 Za1
W–B
a1
GR
1
W
3
W–B
2
U2
Junction
Connector
W–B
3 TU2
W–B
5 TY2
W–B
W
4 TY2
W
Y1
* 1 : Except Narrow Standard Roof
* 2 : Narrow Standard Roof

## : Parts Location

| Code | | See Page | Code | | See Page | Code | See Page |
|---|---|---|---|---|---|---|---|
| D36 | B | 44 (*1) | D37 | A | 45 (*2) | T16 | 50 (LHD) |
| | | 45 (*2) | | | 52 (*4) | | 58 (RHD) |
| | | 46 (*3) | | | 53 (*5) | U1 | 51 (LHD) |
| | | 52 (*4) | T14 | A | 50 (LHD) | | 59 (RHD) |
| | | 53 (*5) | | | 58 (RHD) | U2 | 51 (LHD) |
| | | 54 (*6) | T15 | B | 50 (LHD) | | 59 (RHD) |
| D37 | A | 44 (*1) | | | 58 (RHD) | | |

## : Junction Block and Wire Harness Connector

| Code | See Page | Junction Block and Wire Harness (Connector Location) |
|---|---|---|
| 5A | 30 | Roof Wire and Instrument Panel J/B (Left Side of Instrument Panel) |
| 5E | 30 | Engine Room Main Wire and Instrument Panel J/B (Left Side of Instrument Panel) |

## : Connector Joining Wire Harness and Wire Harness

| Code | See Page | Joining Wire Harness and Wire Harness (Connector Location) |
|---|---|---|
| DB4 | 60 (*1) | Engine Wire and Engine Room Main Wire (Front Side of Engine Room R/B No.1) |
| | 61 (*2) | |
| | 62 (*3) | |
| | 68 (*4) | |
| | 69 (*5) | |
| | 70 (*6) | |
| TU1 | 66 (LHD) | Roof Wire and Roof No.2 Wire (Rear of the Left Side of the Roof Panel) |
| | 74 (RHD) | |
| TU2 | 66 (LHD) | |
| | 74 (RHD) | |
| TY2 | 66 (LHD) | Roof Wire and Luggage Room No.3 Wire (Left Quarter Panel) |
| | 74 (RHD) | |
| ZU1 | 66 (LHD) | Back Door No.1 Wire and Roof No.2 Wire (Rear of the Right Side of the Roof Panel) |
| | 74 (RHD) | |
| Za1 | 66 (LHD) | Back Door No.1 Wire and Back Door No.2 Wire (Right Side of Back Door) |
| | 74 (RHD) | |

## : Ground Points

| Code | See Page | Ground Points Location |
|---|---|---|
| Y1 | 66 (LHD) | Left Quarter Panel |
| | 74 (RHD) | |
| a1 | 66 (LHD) | Back Door Right |
| | 74 (RHD) | |

* 1 : LHD 2TR–FE * 2 : LHD 2KD–FTV * 3 : LHD 5L–E * 4 : RHD 2TR–FE * 5 : RHD 2KD–FTV * 6 : RHD 5L–E * 7 : 2TR–FE
* 8 : 2KD–FTV, 5L–E

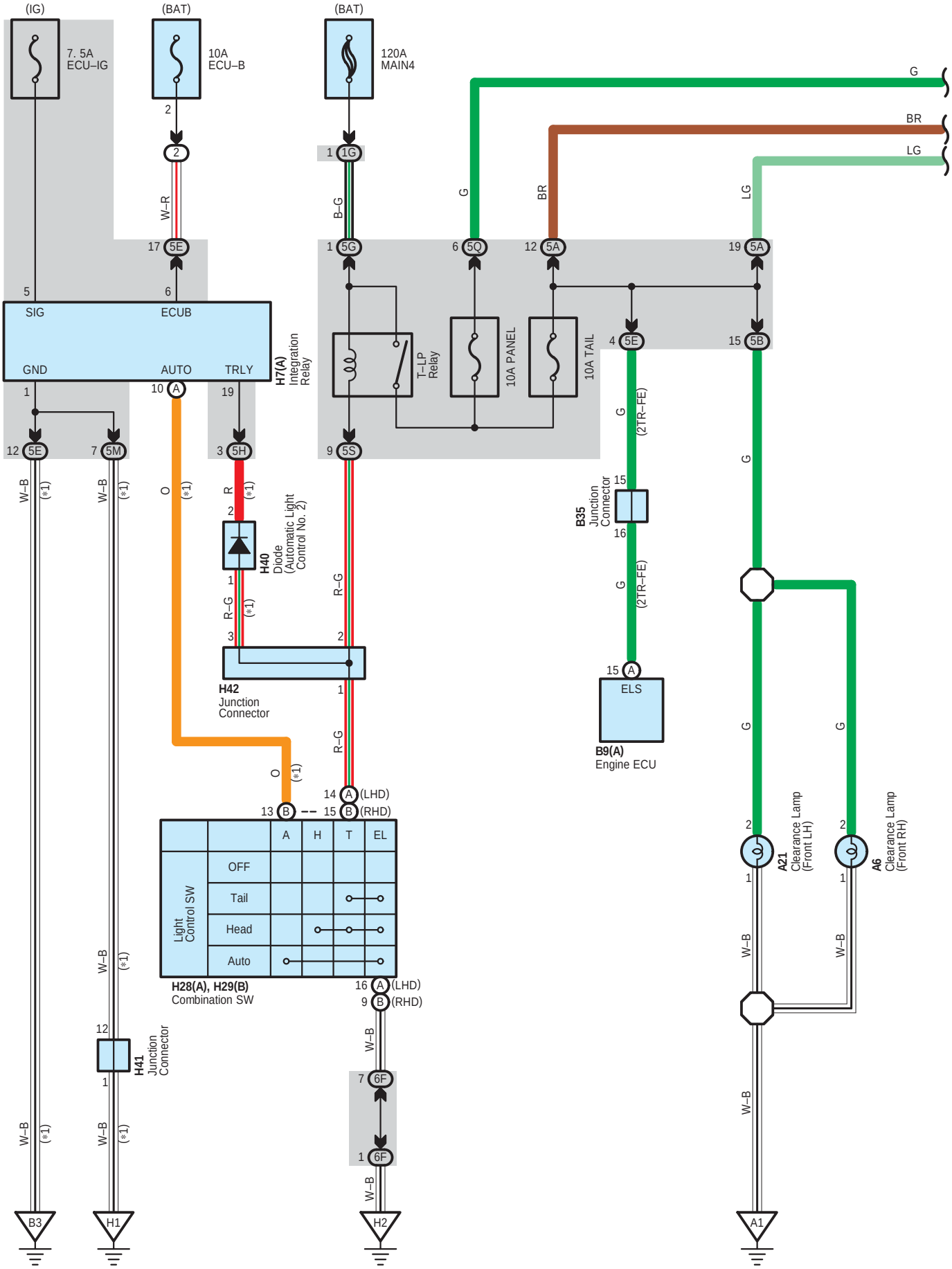
(IG)
(BAT)
(BAT)
7. 5A
ECU–IG
10A
ECU–B
120A
MAIN4
G
BR
LG
W–R
B–G
SIG
ECUB
GND
AUTO
TRLY
H7(A)
Integration
Relay
T–LP
Relay
10A PANEL
10A TAIL
B35
Junction
Connector
(2TR–FE)
ELS
B9(A)
Engine ECU
H40
Diode
(Automatic Light
Control No. 2)
H42
Junction
Connector
R–G
O
(*1)
(LHD)
(RHD)
Light
Control SW
OFF
Tail
Head
Auto
H28(A), H29(B)
Combination SW
H41
Junction
Connector
A21
Clearance Lamp
(Front LH)
A6
Clearance Lamp
(Front RH)
B3
H1
H2
A1

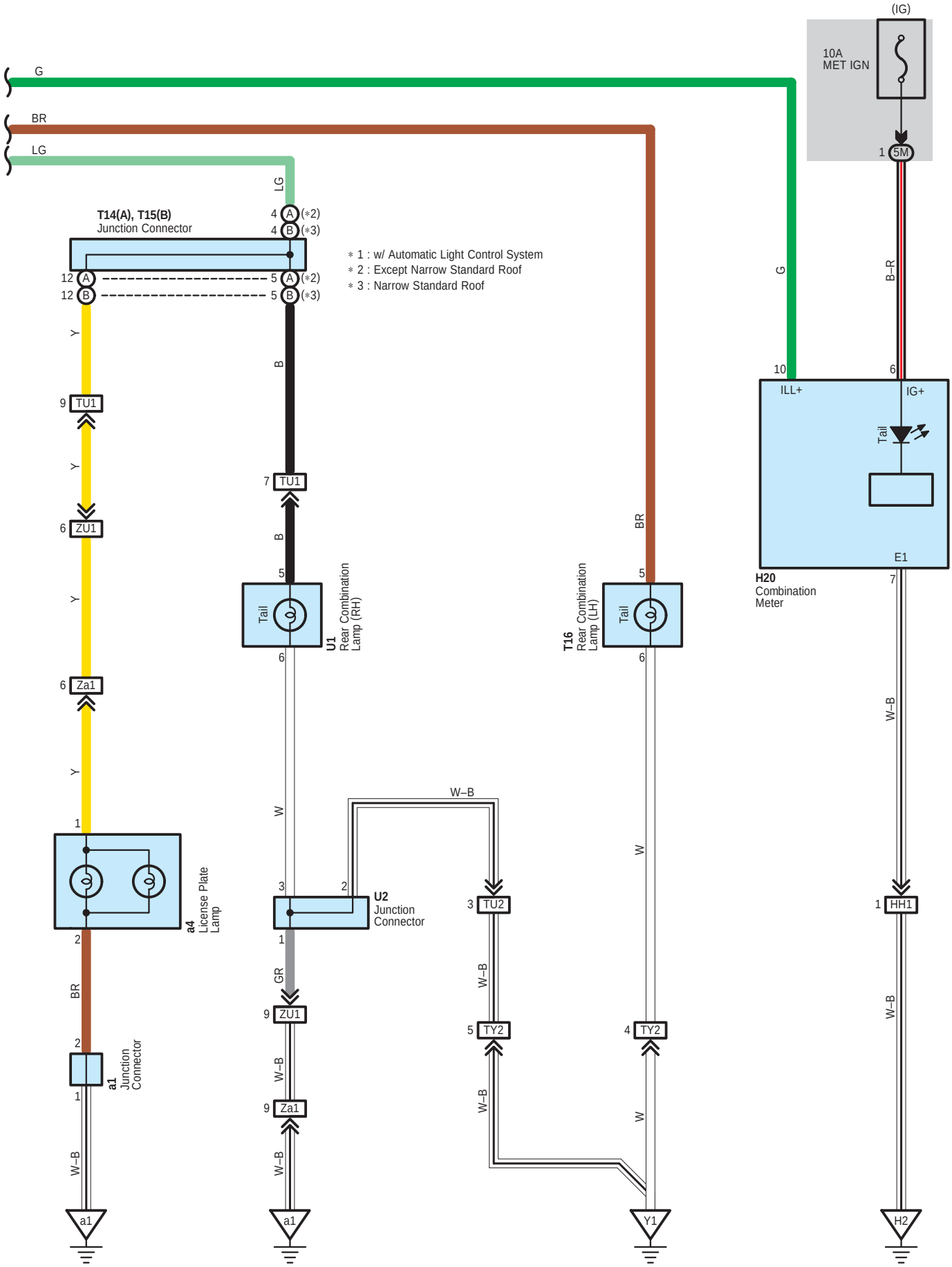
(IG)
10A
MET IGN
1 5M
G
BR
LG
B–R
10
6
ILL+
IG+
Tail
E1
H20
Combination
Meter
7
W–B
1 HH1
W–B
H2
LG
T14(A), T15(B)
Junction Connector
4 A (*2)
4 B (*3)
12 A
12 B
5 A (*2)
5 B (*3)
* 1 : w/ Automatic Light Control System
* 2 : Except Narrow Standard Roof
* 3 : Narrow Standard Roof
Y
9 TU1
Y
6 ZU1
Y
6 Za1
Y
1
2
BR
2
1
W–B
a1
a1
Junction
Connector
a4
License Plate
Lamp
B
7 TU1
B
5
Tail
U1
Rear Combination
Lamp (RH)
6
W
3
2
U2
Junction
Connector
1
GR
9 ZU1
W–B
9 Za1
W–B
a1
W–B
3 TU2
W–B
5 TY2
W–B
BR
5
Tail
T16
Rear Combination
Lamp (LH)
6
W
4 TY2
W
Y1

# Taillight

**: Parts Location**

| Code | See Page | Code | See Page | Code | See Page |
|---|---|---|---|---|---|
| A6 | 48 (LHD) | H28 A | 49 (LHD) | T16 | 58 (RHD) |
| | 56 (RHD) | H29 B | 57 (RHD) | U1 | 51 (LHD) |
| A21 | 48 (LHD) | H40 | 57 (RHD) | | 59 (RHD) |
| | 56 (RHD) | H41 | 57 (RHD) | U2 | 51 (LHD) |
| B9 A | 44 (*1) | H42 | 49 (LHD) | | 59 (RHD) |
| | 52 (*4) | | 57 (RHD) | a1 | 51 (LHD) |
| B35 | 44 (*1) | T14 A | 50 (LHD) | | 59 (RHD) |
| | 52 (*4) | | 58 (RHD) | a4 | 51 (LHD) |
| H7 A | 57 (RHD) | T15 B | 50 (LHD) | | 59 (RHD) |
| H20 | 49 (LHD) | | 58 (RHD) | | |
| | 57 (RHD) | T16 | 50 (LHD) | | |

**: Relay Blocks**

| Code | See Page | Relay Blocks (Relay Block Location) |
|---|---|---|
| 2 | 28 | Engine Room R/B No.2 (Inside of Battery Room) |

**: Junction Block and Wire Harness Connector**

| Code | See Page | Junction Block and Wire Harness (Connector Location) |
|---|---|---|
| 1G | 24 | Engine Room Main Wire and Engine Room J/B No.1 (Engine Compartment Front) |
| 5A | 30 | Roof Wire and Instrument Panel J/B (Left Side of Instrument Panel) |
| 5B | 30 | Cowl to Head Lamp Wire and Instrument Panel J/B (Left Side of Instrument Panel) |
| 5E | 30 | Engine Room Main Wire and Instrument Panel J/B (Left Side of Instrument Panel) |
| 5G | | |
| 5H | 30 | Instrument Panel Wire and Instrument Panel J/B (Left Side of Instrument Panel) |
| 5M | 31 | |
| 5Q | | |
| 5S | | |
| 6F | 38 (LHD) | Instrument Panel Wire and Center J/B (Instrument Panel Reinforcement LH) |
| | 38 (RHD) | Instrument Panel Wire and Center J/B (Instrument Panel Reinforcement RH) |

**: Connector Joining Wire Harness and Wire Harness**

| Code | See Page | Joining Wire Harness and Wire Harness (Connector Location) |
|---|---|---|
| HH1 | 64 (LHD) | Instrument Panel Wire and Instrument Panel Wire (Near the Steering Column) |
| | 72 (RHD) | Instrument Panel Wire and Instrument Panel Wire (Instrument Panel Reinforcement RH) |
| TU1 | 66 (LHD) | Roof Wire and Roof No.2 Wire (Rear of the Left Side of the Roof Panel) |
| | 74 (RHD) | |
| TU2 | 66 (LHD) | |
| | 74 (RHD) | |
| TY2 | 66 (LHD) | Roof Wire and Luggage Room No.3 Wire (Left Quarter Panel) |
| | 74 (RHD) | |
| ZU1 | 66 (LHD) | Back Door No.1 Wire and Roof No.2 Wire (Rear of the Right Side of the Roof Panel) |
| | 74 (RHD) | |
| Za1 | 66 (LHD) | Back Door No.1 Wire and Back Door No.2 Wire (Right Side of Back Door) |
| | 74 (RHD) | |

* 1 : LHD 2TR–FE * 2 : LHD 2KD–FTV * 3 : LHD 5L–E * 4 : RHD 2TR–FE * 5 : RHD 2KD–FTV * 6 : RHD 5L–E * 7 : 2TR–FE
* 8 : 2KD–FTV, 5L–E

▽ : **Ground Points**

| Code | See Page | Ground Points Location |
|---|---|---|
| A1 | 64 (LHD) | Dash Panel Right |
| | 72 (RHD) | |
| B3 | 68 (*4) | Front Floor Panel Left |
| H1 | 64 (LHD) | Instrument Panel Reinforcement |
| | 72 (RHD) | |
| H2 | 64 (LHD) | |
| | 72 (RHD) | |
| Y1 | 66 (LHD) | Left Quarter Panel |
| | 74 (RHD) | |
| a1 | 66 (LHD) | Back Door Right |
| | 74 (RHD) | |

* 1 : LHD 2TR–FE * 2 : LHD 2KD–FTV * 3 : LHD 5L–E * 4 : RHD 2TR–FE * 5 : RHD 2KD–FTV * 6 : RHD 5L–E * 7 : 2TR–FE
* 8 : 2KD–FTV, 5L–E

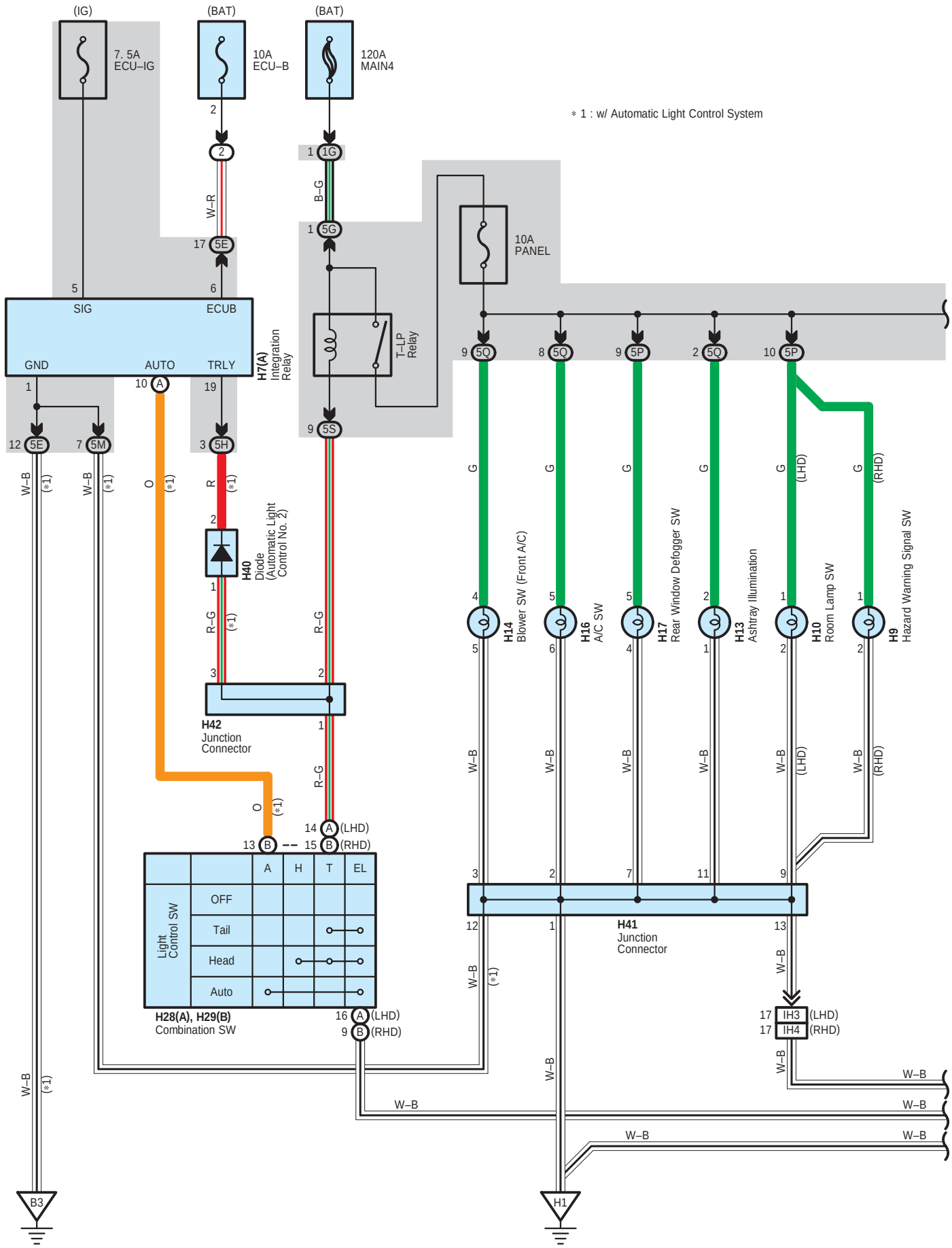
(IG)
(BAT)
(BAT)
7. 5A
ECU–IG
10A
ECU–B
120A
MAIN4
* 1 : w/ Automatic Light Control System
10A
PANEL
SIG
ECUB
GND
AUTO
TRLY
H7(A)
Integration
Relay
T–LP
Relay
H40
Diode
(Automatic Light
Control No. 2)
H42
Junction
Connector
H41
Junction
Connector
H14
Blower SW (Front A/C)
H16
A/C SW
H17
Rear Window Defogger SW
H13
Ashtray Illumination
H10
Room Lamp SW
H9
Hazard Warning Signal SW
(LHD)
(RHD)
Light
Control SW
OFF
Tail
Head
Auto
A
H
T
EL
H28(A), H29(B)
Combination SW
IH3
IH4
B3
H1
W–B
G
R
R–G
O

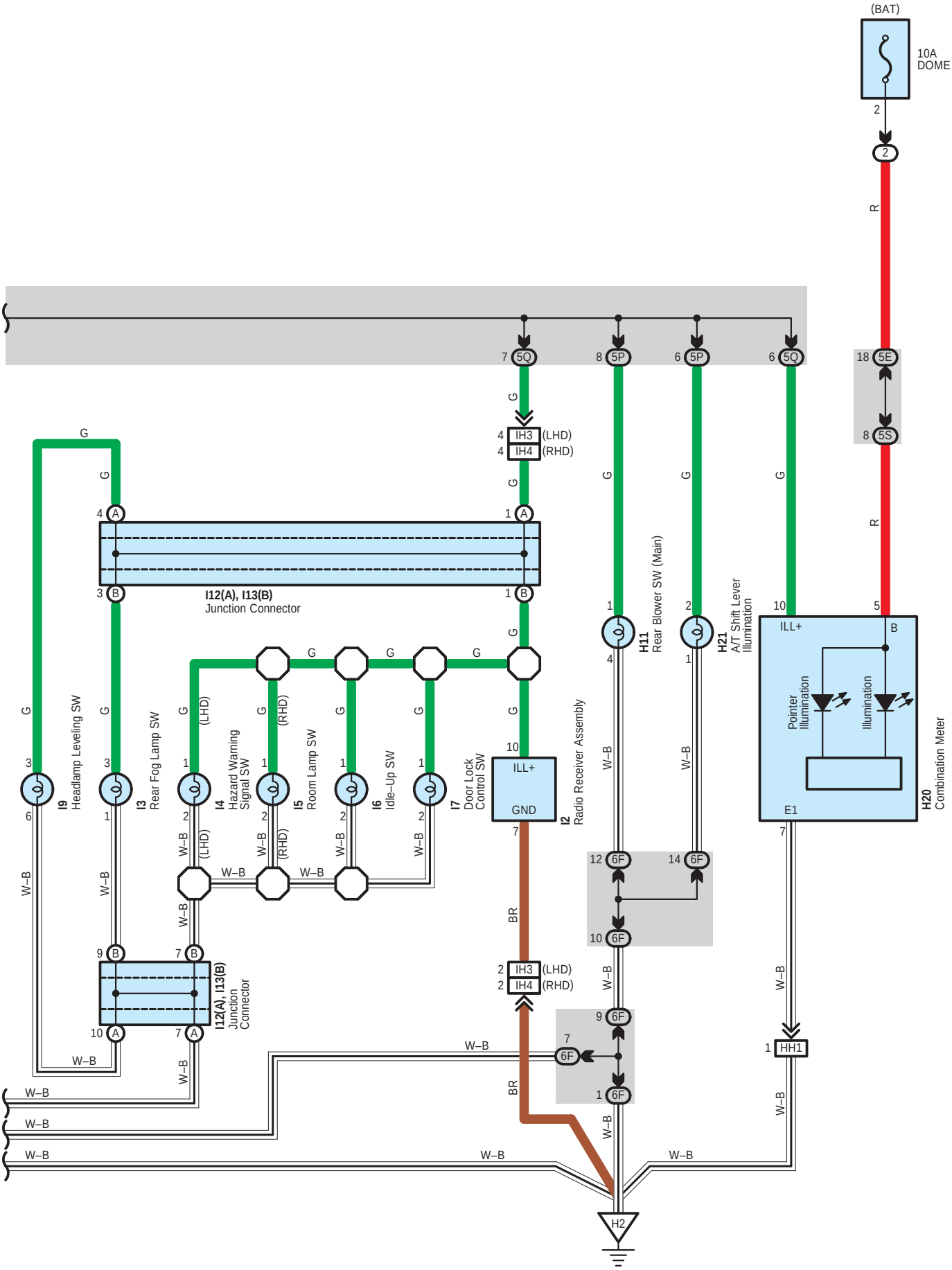
(BAT)
10A
DOME
2
2
R
18 5E
8 5S
R
5
7 5Q
8 5P
6 5P
6 5Q
G
4 IH3 (LHD)
4 IH4 (RHD)
1 A
3 B
I12(A), I13(B)
Junction Connector
1 B
I9
Headlamp Leveling SW
I3
Rear Fog Lamp SW
I4
Hazard Warning
Signal SW
I5
Room Lamp SW
I6
Idle–Up SW
I7
Door Lock
Control SW
(LHD)
(RHD)
W–B
BR
10 ILL+
GND
7
I2
Radio Receiver Assembly
H11
Rear Blower SW (Main)
H21
A/T Shift Lever
Illumination
ILL+
B
Pointer
Illumination
Illumination
E1
H20
Combination Meter
12 6F
14 6F
10 6F
9 6F
7 6F
1 6F
2 IH3 (LHD)
2 IH4 (RHD)
1 HH1
9 B
7 B
10 A
7 A
I12(A), I13(B)
Junction
Connector
H2

# Illumination

## : Parts Location

| Code | See Page | Code | See Page | Code | See Page |
|---|---|---|---|---|---|
| H7 A | 49 (LHD) | H20 | 49 (LHD) | I3 | 56 (RHD) |
| | 57 (RHD) | | 57 (RHD) | I4 | 48 (LHD) |
| H9 | 57 (RHD) | H21 | 49 (LHD) | I5 | 56 (RHD) |
| H10 | 49 (LHD) | | 57 (RHD) | I6 | 48 (LHD) |
| H11 | 49 (LHD) | H28 A | 49 (LHD) | | 56 (RHD) |
| | 57 (RHD) | H29 B | 57 (RHD) | I7 | 48 (LHD) |
| H13 | 49 (LHD) | H40 | 57 (RHD) | | 56 (RHD) |
| | 57 (RHD) | H41 | 49 (LHD) | I9 | 48 (LHD) |
| H14 | 49 (LHD) | | 57 (RHD) | I12 A | 48 (LHD) |
| | 57 (RHD) | H42 | 49 (LHD) | | 56 (RHD) |
| H16 | 49 (LHD) | | 57 (RHD) | I13 B | 48 (LHD) |
| | 57 (RHD) | I2 | 48 (LHD) | | 56 (RHD) |
| H17 | 49 (LHD) | | 56 (RHD) | | |
| | 57 (RHD) | I3 | 48 (LHD) | | |

## : Relay Blocks

| Code | See Page | Relay Blocks (Relay Block Location) |
|---|---|---|
| 2 | 28 | Engine Room R/B No.2 (Inside of Battery Room) |

## : Junction Block and Wire Harness Connector

| Code | See Page | Junction Block and Wire Harness (Connector Location) |
|---|---|---|
| 1G | 24 | Engine Room Main Wire and Engine Room J/B No.1 (Engine Compartment Front) |
| 5E | 30 | Engine Room Main Wire and Instrument Panel J/B (Left Side of Instrument Panel) |
| 5G | | |
| 5H | 30 | Instrument Panel Wire and Instrument Panel J/B (Left Side of Instrument Panel) |
| 5M | 31 | |
| 5P | | |
| 5Q | | |
| 5S | | |
| 6F | 38 (LHD) | Instrument Panel Wire and Center J/B (Instrument Panel Reinforcement LH) |
| | 38 (RHD) | Instrument Panel Wire and Center J/B (Instrument Panel Reinforcement RH) |

## : Connector Joining Wire Harness and Wire Harness

| Code | See Page | Joining Wire Harness and Wire Harness (Connector Location) |
|---|---|---|
| HH1 | 64 (LHD) | Instrument Panel Wire and Instrument Panel Wire (Near the Steering Column) |
| | 72 (RHD) | Instrument Panel Wire and Instrument Panel Wire (Instrument Panel Reinforcement RH) |
| IH3 | 64 (LHD) | Instrument Panel No.2 Wire and Instrument Panel Wire (Instrument Panel Reinforcement RH) |
| IH4 | 72 (RHD) | |

## : Ground Points

| Code | See Page | Ground Points Location |
|---|---|---|
| B3 | 68 (*4) | Front Floor Panel Left |
| H1 | 64 (LHD) | Instrument Panel Reinforcement |
| | 72 (RHD) | |
| H2 | 64 (LHD) | |
| | 72 (RHD) | |

* 1 : LHD 2TR–FE * 2 : LHD 2KD–FTV * 3 : LHD 5L–E * 4 : RHD 2TR–FE * 5 : RHD 2KD–FTV * 6 : RHD 5L–E * 7 : 2TR–FE
* 8 : 2KD–FTV, 5L–E

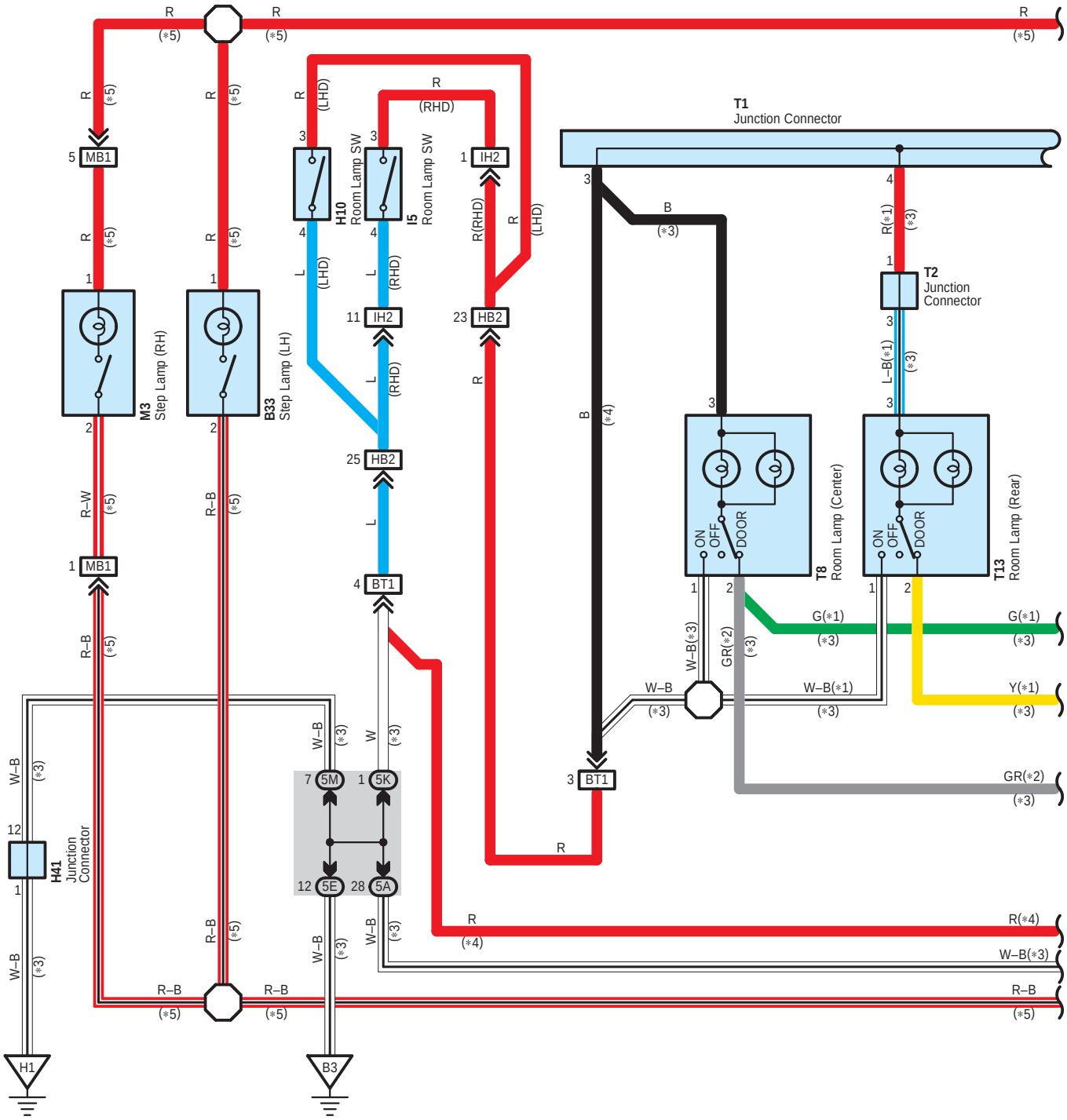
T1
Junction Connector
T2
Junction Connector
H10
Room Lamp SW
I5
Room Lamp SW
M3
Step Lamp (RH)
B33
Step Lamp (LH)
T8
Room Lamp (Center)
T13
Room Lamp (Rear)
H41
Junction Connector
MB1
IH2
HB2
BT1
5M
5K
5E
5A
ON
OFF
DOOR
H1
B3

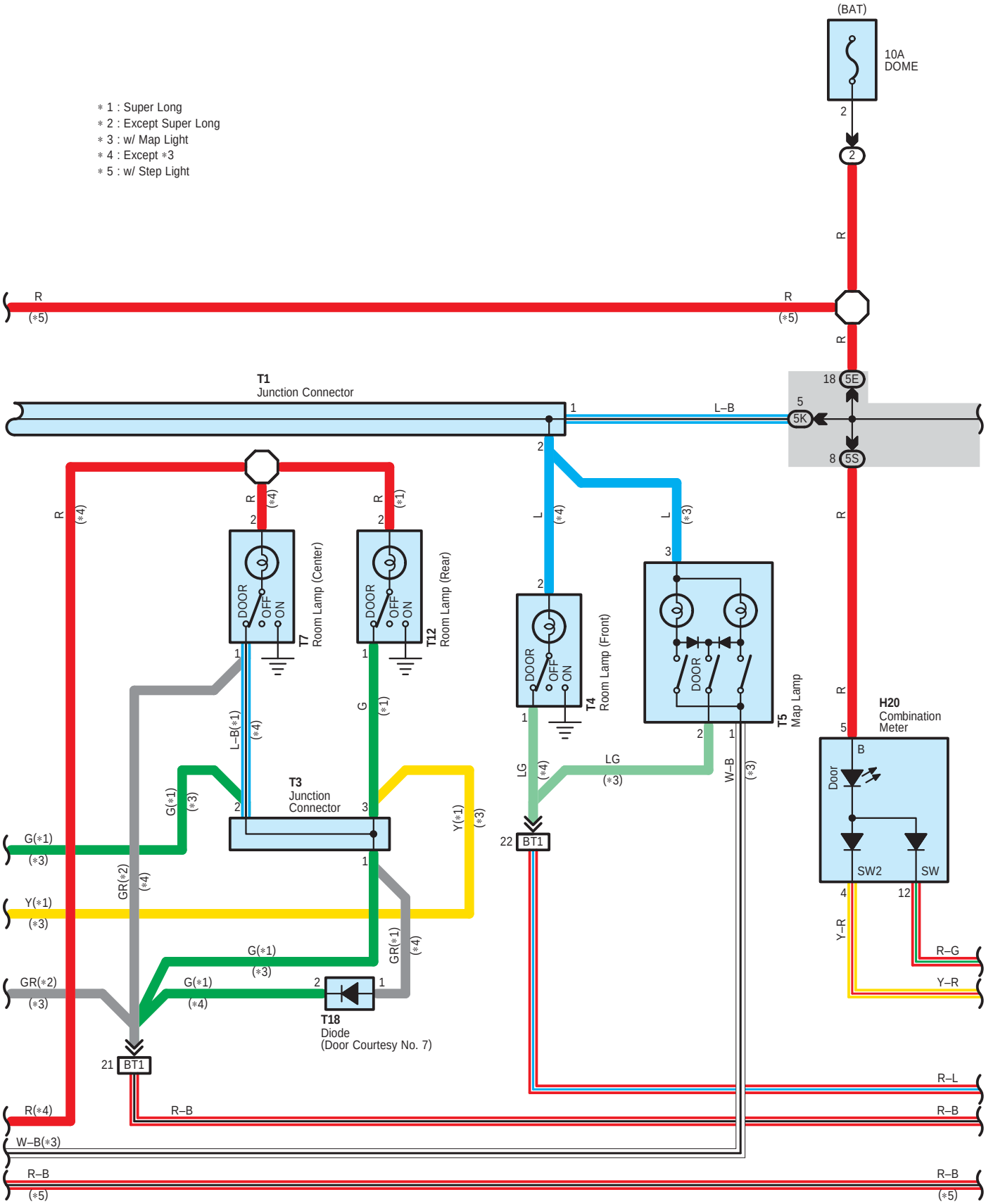
∗ 1 : Super Long
∗ 2 : Except Super Long
∗ 3 : w/ Map Light
∗ 4 : Except ∗3
∗ 5 : w/ Step Light
(BAT)
10A
DOME
T1
Junction Connector
L–B
5E
5K
5S
T7
Room Lamp (Center)
T12
Room Lamp (Rear)
T4
Room Lamp (Front)
T5
Map Lamp
H20
Combination
Meter
Door
SW2
SW
T3
Junction
Connector
T18
Diode
(Door Courtesy No. 7)
BT1
DOOR
OFF
ON
R
L
G
LG
W–B
L–B(∗1)
G(∗1)
GR(∗2)
Y(∗1)
GR(∗1)
Y–R
R–G
R–L
R–B
W–B(∗3)

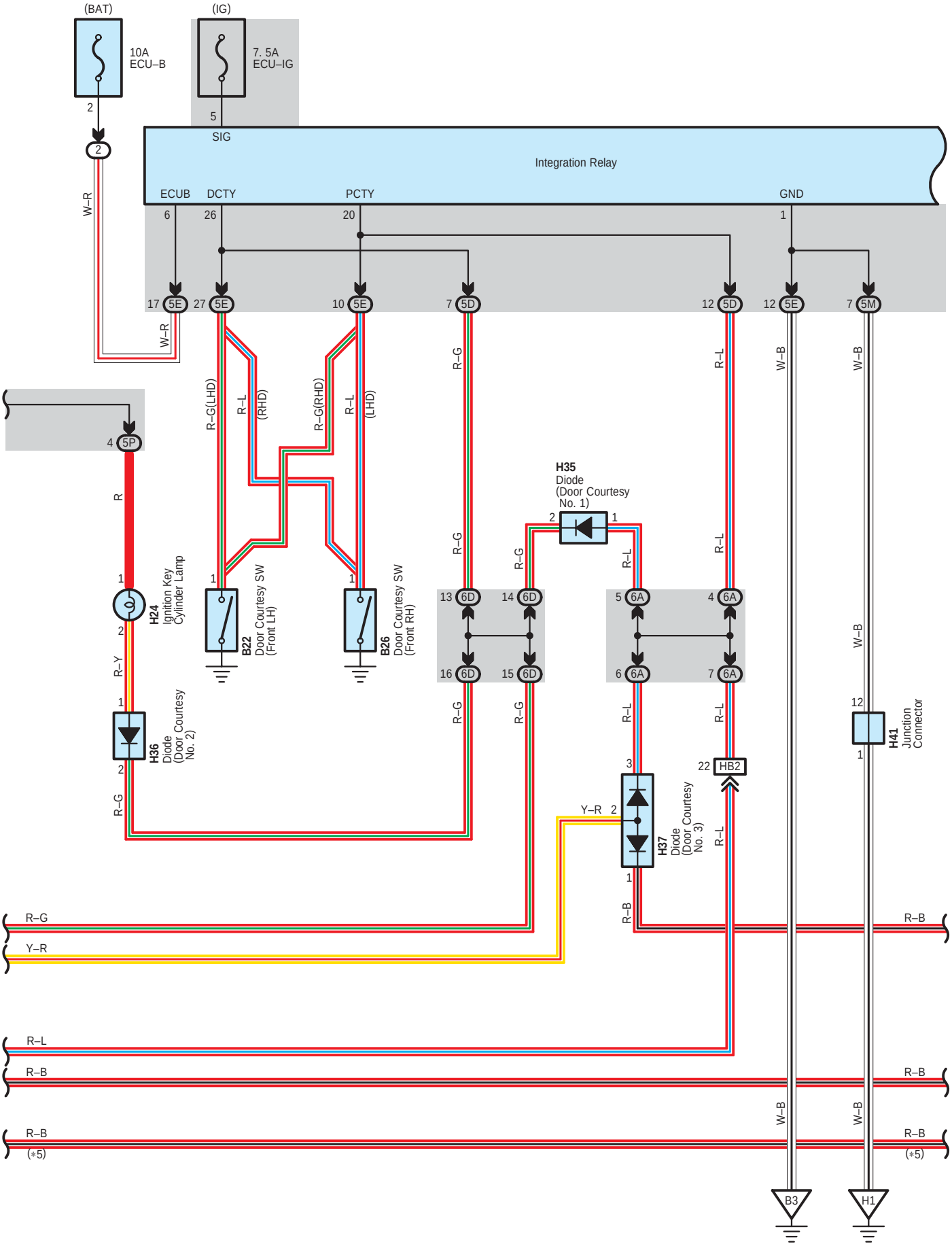
(BAT)
(IG)
10A
ECU–B
7. 5A
ECU–IG
SIG
Integration Relay
ECUB
DCTY
PCTY
GND
W–R
R–G(LHD)
R–L
(RHD)
R–G(RHD)
R–L
(LHD)
R–G
R–L
W–B
H24
Ignition Key
Cylinder Lamp
B22
Door Courtesy SW
(Front LH)
B26
Door Courtesy SW
(Front RH)
H35
Diode
(Door Courtesy
No. 1)
H36
Diode
(Door Courtesy
No. 2)
H37
Diode
(Door Courtesy
No. 3)
H41
Junction
Connector
HB2
R–Y
Y–R
R–B
(*5)
B3
H1

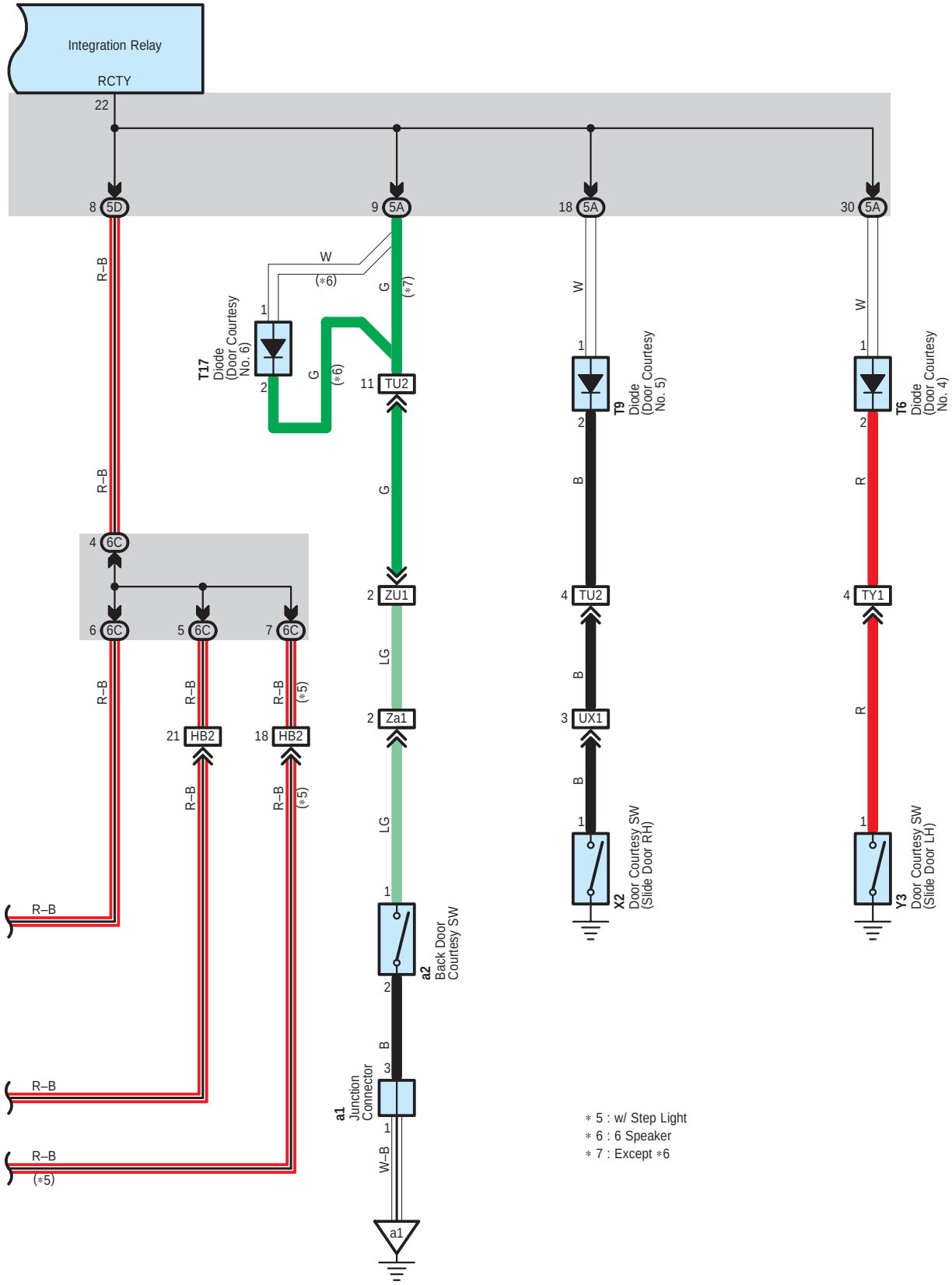
Integration Relay
RCTY
22
8 5D
9 5A
18 5A
30 5A
R–B
W
(∗6)
G
(∗7)
T17
Diode
(Door Courtesy
No. 6)
1
2
G
(∗6)
11 TU2
G
T9
Diode
(Door Courtesy
No. 5)
W
B
4 TU2
3 UX1
B
X2
Door Courtesy SW
(Slide Door RH)
T6
Diode
(Door Courtesy
No. 4)
R
4 TY1
R
Y3
Door Courtesy SW
(Slide Door LH)
4 6C
6 6C
5 6C
7 6C
R–B
21 HB2
18 HB2
(∗5)
2 ZU1
LG
2 Za1
LG
a2
Back Door
Courtesy SW
B
a1
Junction
Connector
W–B
a1
R–B
R–B
R–B
(∗5)
∗ 5 : w/ Step Light
∗ 6 : 6 Speaker
∗ 7 : Except ∗6

# Interior Light

**: Parts Location**

| Code | See Page | Code | See Page | Code | See Page |
|---|---|---|---|---|---|
| B22 | 50 (LHD) | I5 | 56 (RHD) | T8 | 58 (RHD) |
| | 58 (RHD) | M3 | 50 (LHD) | T9 | 50 (LHD) |
| B26 | 50 (LHD) | | 58 (RHD) | T12 | 50 (LHD) |
| | 58 (RHD) | T1 | 48 (LHD) | | 58 (RHD) |
| B33 | 58 (RHD) | | 56 (RHD) | T13 | 50 (LHD) |
| H10 | 49 (LHD) | T2 | 48 (LHD) | | 58 (RHD) |
| H20 | 49 (LHD) | | 56 (RHD) | T17 | 50 (LHD) |
| | 57 (RHD) | T3 | 48 (LHD) | T18 | 48 (LHD) |
| H24 | 49 (LHD) | | 56 (RHD) | | 56 (RHD) |
| | 57 (RHD) | T4 | 50 (LHD) | X2 | 51 (LHD) |
| H35 | 49 (LHD) | | 58 (RHD) | | 59 (RHD) |
| | 57 (RHD) | T5 | 50 (LHD) | Y3 | 51 (LHD) |
| H36 | 49 (LHD) | | 58 (RHD) | | 59 (RHD) |
| | 57 (RHD) | T6 | 50 (LHD) | a1 | 51 (LHD) |
| H37 | 49 (LHD) | | 58 (RHD) | | 59 (RHD) |
| | 57 (RHD) | T7 | 50 (LHD) | a2 | 51 (LHD) |
| H41 | 49 (LHD) | | 58 (RHD) | | 59 (RHD) |
| | 57 (RHD) | T8 | 50 (LHD) | | |

**: Relay Blocks**

| Code | See Page | Relay Blocks (Relay Block Location) |
|---|---|---|
| 2 | 28 | Engine Room R/B No.2 (Inside of Battery Room) |

**: Junction Block and Wire Harness Connector**

| Code | See Page | Junction Block and Wire Harness (Connector Location) |
|---|---|---|
| 5A | 30 | Roof Wire and Instrument Panel J/B (Left Side of Instrument Panel) |
| 5D | 30 | Instrument Panel Wire and Instrument Panel J/B (Left Side of Instrument Panel) |
| 5E | 30 | Engine Room Main Wire and Instrument Panel J/B (Left Side of Instrument Panel) |
| 5K | 30 | Roof Wire and Instrument Panel J/B (Left Side of Instrument Panel) |
| 5M | 31 | Instrument Panel Wire and Instrument Panel J/B (Left Side of Instrument Panel) |
| 5P | | |
| 5S | | |
| 6A | 38 (LHD) | Instrument Panel Wire and Center J/B (Instrument Panel Reinforcement LH) |
| | 38 (RHD) | Instrument Panel Wire and Center J/B (Instrument Panel Reinforcement RH) |
| 6C | 38 (LHD) | Instrument Panel Wire and Center J/B (Instrument Panel Reinforcement LH) |
| | 38 (RHD) | Instrument Panel Wire and Center J/B (Instrument Panel Reinforcement RH) |
| 6D | 38 (LHD) | Instrument Panel Wire and Center J/B (Instrument Panel Reinforcement LH) |
| | 38 (RHD) | Instrument Panel Wire and Center J/B (Instrument Panel Reinforcement RH) |

**: Connector Joining Wire Harness and Wire Harness**

| Code | See Page | Joining Wire Harness and Wire Harness (Connector Location) |
|---|---|---|
| BT1 | 64 (LHD) | Engine Room Main Wire and Roof Wire (Cowl Side Panel LH) |
| | 72 (RHD) | |
| HB2 | 64 (LHD) | Instrument Panel Wire and Engine Room Main Wire (Under the Instrument Panel J/B) |
| | 72 (RHD) | |
| IH2 | 72 (RHD) | Instrument Panel No.2 Wire and Instrument Panel Wire (Instrument Panel Reinforcement LH) |
| MB1 | 60 (*1) | Pillar No.1 Wire and Engine Room Main Wire (RH Side Battery Room) |
| | 61 (*2) | |
| | 62 (*3) | |
| | 68 (*4) | |
| | 69 (*5) | |
| | 70 (*6) | |
| TU2 | 66 (LHD) | Roof Wire and Roof No.2 Wire (Rear of the Left Side of the Roof Panel) |
| | 74 (RHD) | |
| TY1 | 66 (LHD) | Roof Wire and Luggage Room No.3 Wire (Left Quarter Panel) |
| | 74 (RHD) | |
| UX1 | 66 (LHD) | Roof No.2 Wire and Luggage Room No.2 Wire (Right Quarter Panel) |
| | 74 (RHD) | |
| ZU1 | 66 (LHD) | Back Door No.1 Wire and Roof No.2 Wire (Rear of the Right Side of the Roof Panel) |
| | 74 (RHD) | |
| Za1 | 66 (LHD) | Back Door No.1 Wire and Back Door No.2 Wire (Right Side of Back Door) |
| | 74 (RHD) | |

**: Ground Points**

| Code | See Page | Ground Points Location |
|---|---|---|
| B3 | 60 (*1) | Front Floor Panel Left |
| | 61 (*2) | |
| | 62 (*3) | |
| | 68 (*4) | |
| | 69 (*5) | |
| | 70 (*6) | |
| H1 | 64 (LHD) | Instrument Panel Reinforcement |
| | 72 (RHD) | |
| a1 | 66 (LHD) | Back Door Right |
| | 74 (RHD) | |

* 1 : LHD 2TR–FE * 2 : LHD 2KD–FTV * 3 : LHD 5L–E * 4 : RHD 2TR–FE * 5 : RHD 2KD–FTV * 6 : RHD 5L–E * 7 : 2TR–FE
* 8 : 2KD–FTV, 5L–E

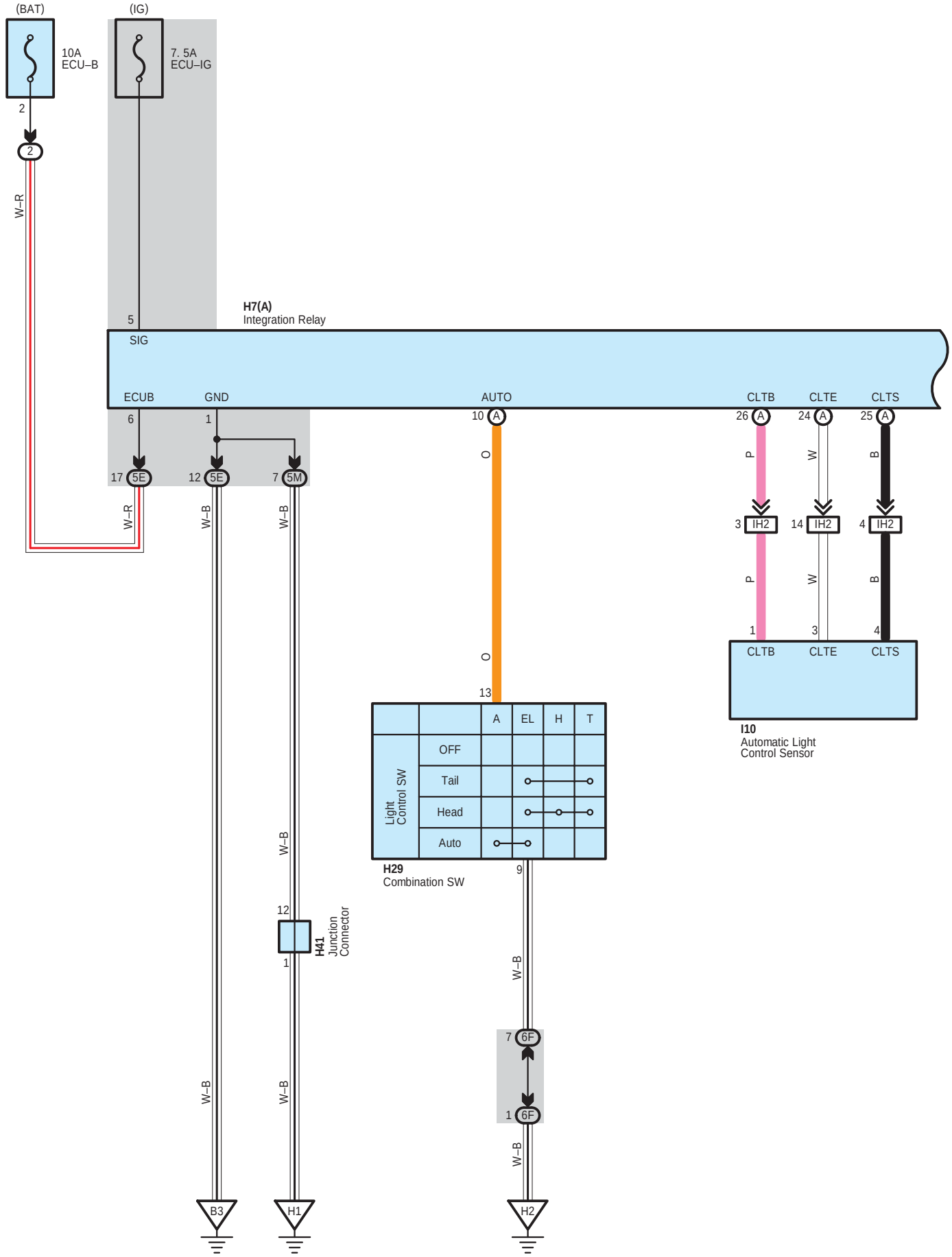
(BAT)
(IG)
10A
ECU–B
7. 5A
ECU–IG
2
2
W–R
5
H7(A)
Integration Relay
SIG
ECUB
GND
AUTO
CLTB
CLTE
CLTS
6
1
10
A
26
A
24
A
25
A
O
P
W
B
17
5E
12
5E
7
5M
3
IH2
14
IH2
4
IH2
W–R
W–B
W–B
W–B
P
W
B
1
3
4
CLTB
CLTE
CLTS
I10
Automatic Light
Control Sensor
O
13
A
EL
H
T
Light
Control SW
OFF
Tail
Head
Auto
H29
Combination SW
9
W–B
12
1
H41
Junction
Connector
W–B
W–B
7
6F
1
6F
W–B
B3
H1
H2

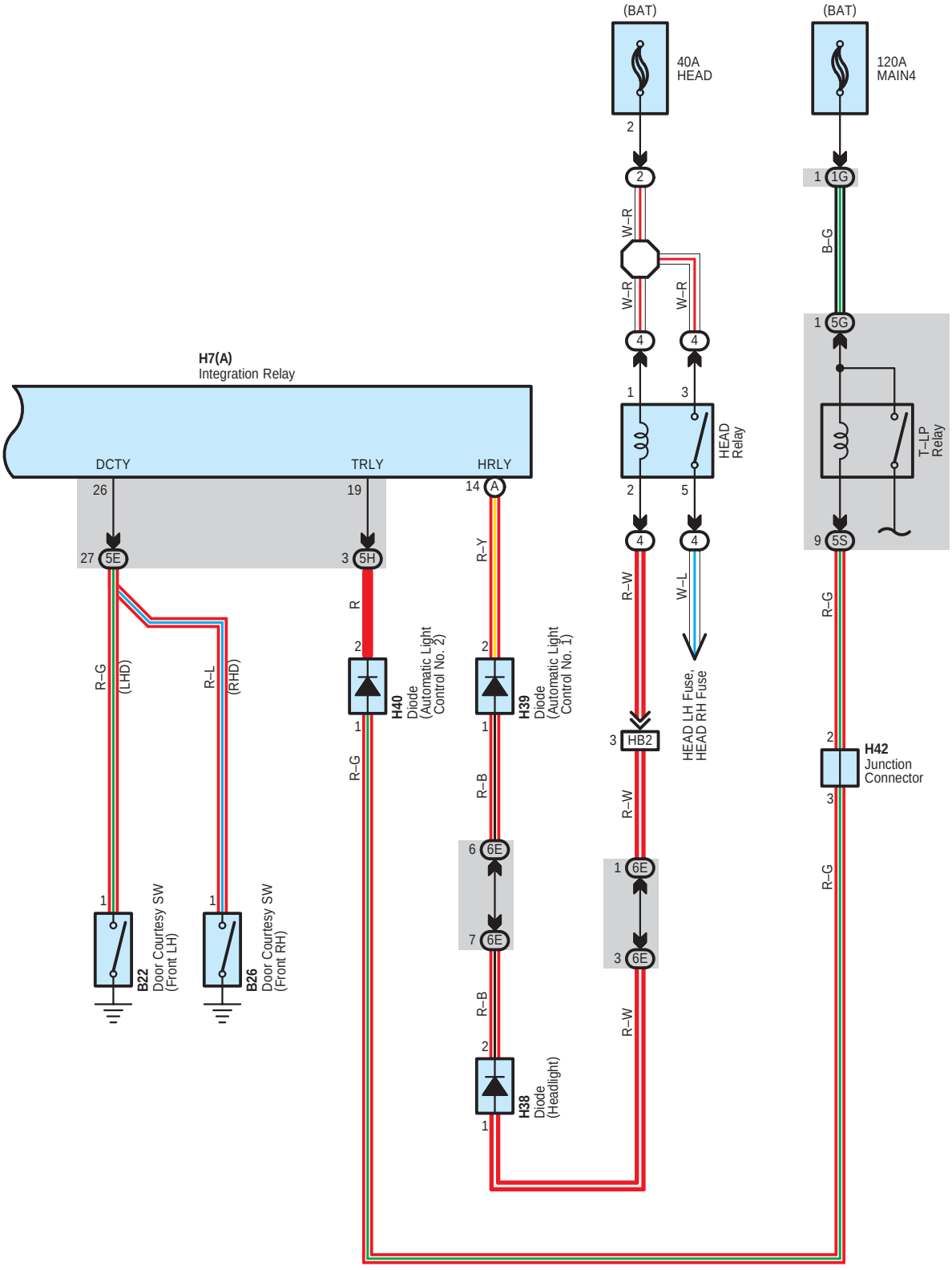

(BAT)
40A
HEAD
(BAT)
120A
MAIN4
H7(A)
Integration Relay
DCTY
TRLY
HRLY
HEAD
Relay
T–LP
Relay
HEAD LH Fuse,
HEAD RH Fuse
H40
Diode
(Automatic Light
Control No. 2)
H39
Diode
(Automatic Light
Control No. 1)
H42
Junction
Connector
B22
Door Courtesy SW
(Front LH)
B26
Door Courtesy SW
(Front RH)
H38
Diode
(Headlight)

# Automatic Light Control

**System Outline**

* Automatic light control, with a light control SW in AUTO position and an ignition SW in ON position, detects whether the area surrounding an automatic light control sensor is light or dark, and automatically turns on/off a tail lamp and a headlamp.
* When the driver's door is opened after an ignition SW is turned from ON to OFF, with a light control SW in AUTO position, automatic light control automatically turns off a tail lamp and a headlamp.

**: Parts Location**

| Code | See Page | Code | See Page | Code | See Page |
|---|---|---|---|---|---|
| B22 | 58 (RHD) | H38 | 57 (RHD) | H42 | 57 (RHD) |
| B26 | 58 (RHD) | H39 | 57 (RHD) | I10 | 56 (RHD) |
| H7 A | 57 (RHD) | H40 | 57 (RHD) | | |
| H29 | 57 (RHD) | H41 | 57 (RHD) | | |

**: Relay Blocks**

| Code | See Page | Relay Blocks (Relay Block Location) |
|---|---|---|
| 2 | 28 | Engine Room R/B No.2 (Inside of Battery Room) |
| 4 | 29 | Instrument Panel R/B (Under the Glove Box) |

**: Junction Block and Wire Harness Connector**

| Code | See Page | Junction Block and Wire Harness (Connector Location) |
|---|---|---|
| 1G | 24 | Engine Room Main Wire and Engine Room J/B No.1 (Engine Compartment Front) |
| 5E | 30 | Engine Room Main Wire and Instrument Panel J/B (Left Side of Instrument Panel) |
| 5G | | |
| 5H | 30 | Instrument Panel Wire and Instrument Panel J/B (Left Side of Instrument Panel) |
| 5M | 31 | |
| 5S | | |
| 6E | 38 (RHD) | Instrument Panel Wire and Center J/B (Instrument Panel Reinforcement RH) |
| 6F | | |

**: Connector Joining Wire Harness and Wire Harness**

| Code | See Page | Joining Wire Harness and Wire Harness (Connector Location) |
|---|---|---|
| HB2 | 72 (RHD) | Instrument Panel Wire and Engine Room Main Wire (Under the Instrument Panel J/B) |
| IH2 | 72 (RHD) | Instrument Panel No.2 Wire and Instrument Panel Wire (Instrument Panel Reinforcement LH) |

**: Ground Points**

| Code | See Page | Ground Points Location |
|---|---|---|
| B3 | 68 (*4) | Front Floor Panel Left |
| H1 | 72 (RHD) | Instrument Panel Reinforcement |
| H2 | | |

* 1 : LHD 2TR–FE * 2 : LHD 2KD–FTV * 3 : LHD 5L–E * 4 : RHD 2TR–FE * 5 : RHD 2KD–FTV * 6 : RHD 5L–E * 7 : 2TR–FE
* 8 : 2KD–FTV, 5L–E

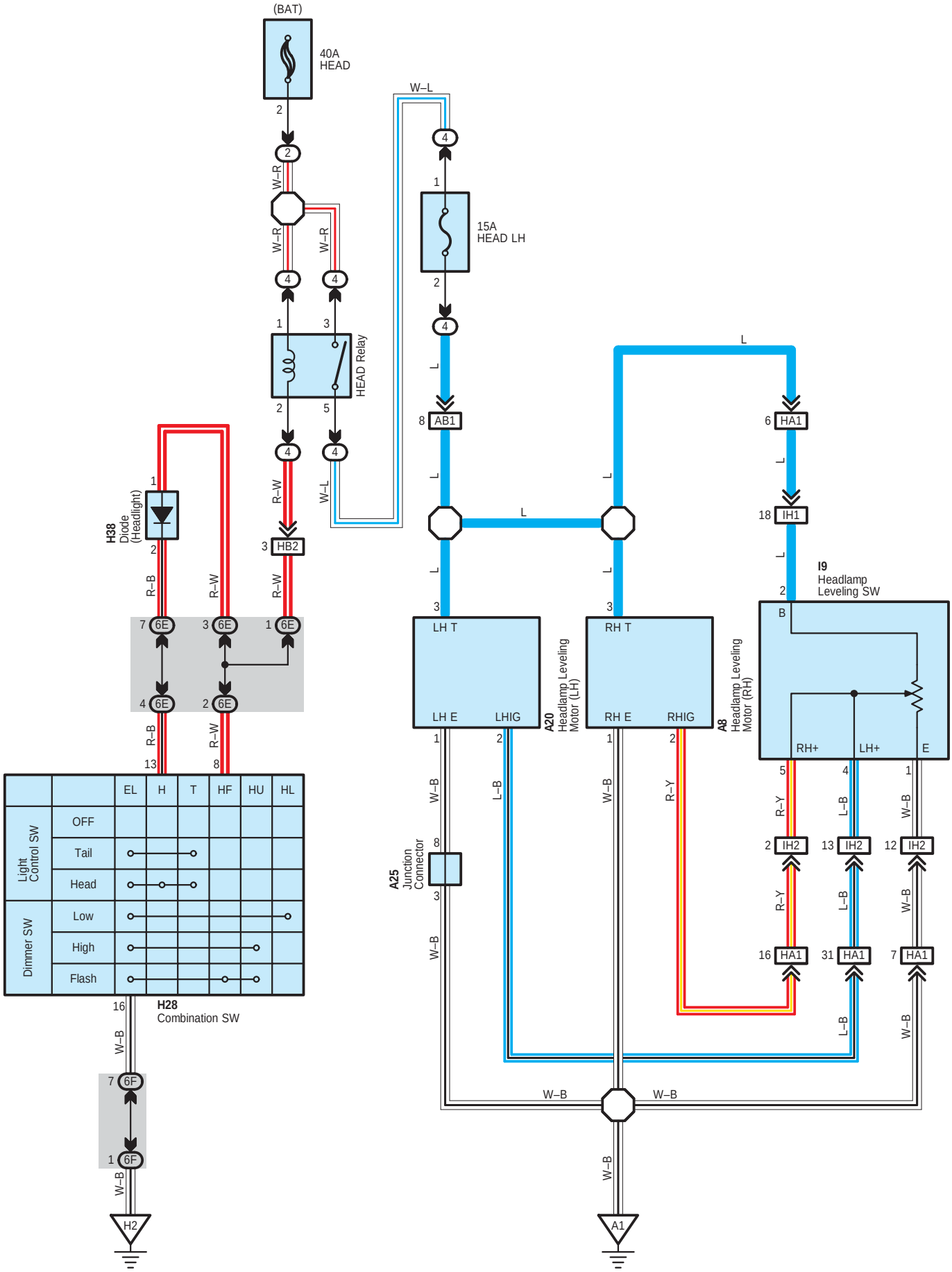
(BAT)
40A
HEAD
W–L
W–R
15A
HEAD LH
HEAD Relay
H38
Diode
(Headlight)
R–B
R–W
HB2
AB1
HA1
IH1
I9
Headlamp
Leveling SW
LH T
LH E
LHIG
RH T
RH E
RHIG
A20
Headlamp Leveling
Motor (LH)
A8
Headlamp Leveling
Motor (RH)
RH+
LH+
E
A25
Junction
Connector
IH2
R–Y
L–B
W–B
L
EL
H
T
HF
HU
HL
Light
Control SW
OFF
Tail
Head
Dimmer SW
Low
High
Flash
H28
Combination SW
6E
6F
H2
A1

**: Parts Location**

| Code | See Page | Code | See Page | Code | See Page |
|---|---|---|---|---|---|
| A8 | 48 (LHD) | A25 | 48 (LHD) | H38 | 49 (LHD) |
| A20 | 48 (LHD) | H28 | 49 (LHD) | I9 | 48 (LHD) |

**: Relay Blocks**

| Code | See Page | Relay Blocks (Relay Block Location) |
|---|---|---|
| 2 | 28 | Engine Room R/B No.2 (Inside of Battery Room) |
| 4 | 29 | Instrument Panel R/B (Under the Glove Box) |

**: Junction Block and Wire Harness Connector**

| Code | See Page | Junction Block and Wire Harness (Connector Location) |
|---|---|---|
| 6E | 38 (LHD) | Instrument Panel Wire and Center J/B (Instrument Panel Reinforcement LH) |
| 6F | | |

**: Connector Joining Wire Harness and Wire Harness**

| Code | See Page | Joining Wire Harness and Wire Harness (Connector Location) |
|---|---|---|
| AB1 | 64 (LHD) | Cowl to Head Lamp Wire and Engine Room Main Wire (Left Side of the Instrument Panel J/B) |
| HA1 | 64 (LHD) | Instrument Panel Wire and Cowl to Head Lamp Wire (Under the Instrument Panel J/B) |
| HB2 | 64 (LHD) | Instrument Panel Wire and Engine Room Main Wire (Under the Instrument Panel J/B) |
| IH1 | 64 (LHD) | Instrument Panel No.2 Wire and Instrument Panel Wire (Instrument Panel Reinforcement LH) |
| IH2 | | |

**: Ground Points**

| Code | See Page | Ground Points Location |
|---|---|---|
| A1 | 64 (LHD) | Dash Panel Right |
| H2 | 64 (LHD) | Instrument Panel Reinforcement |

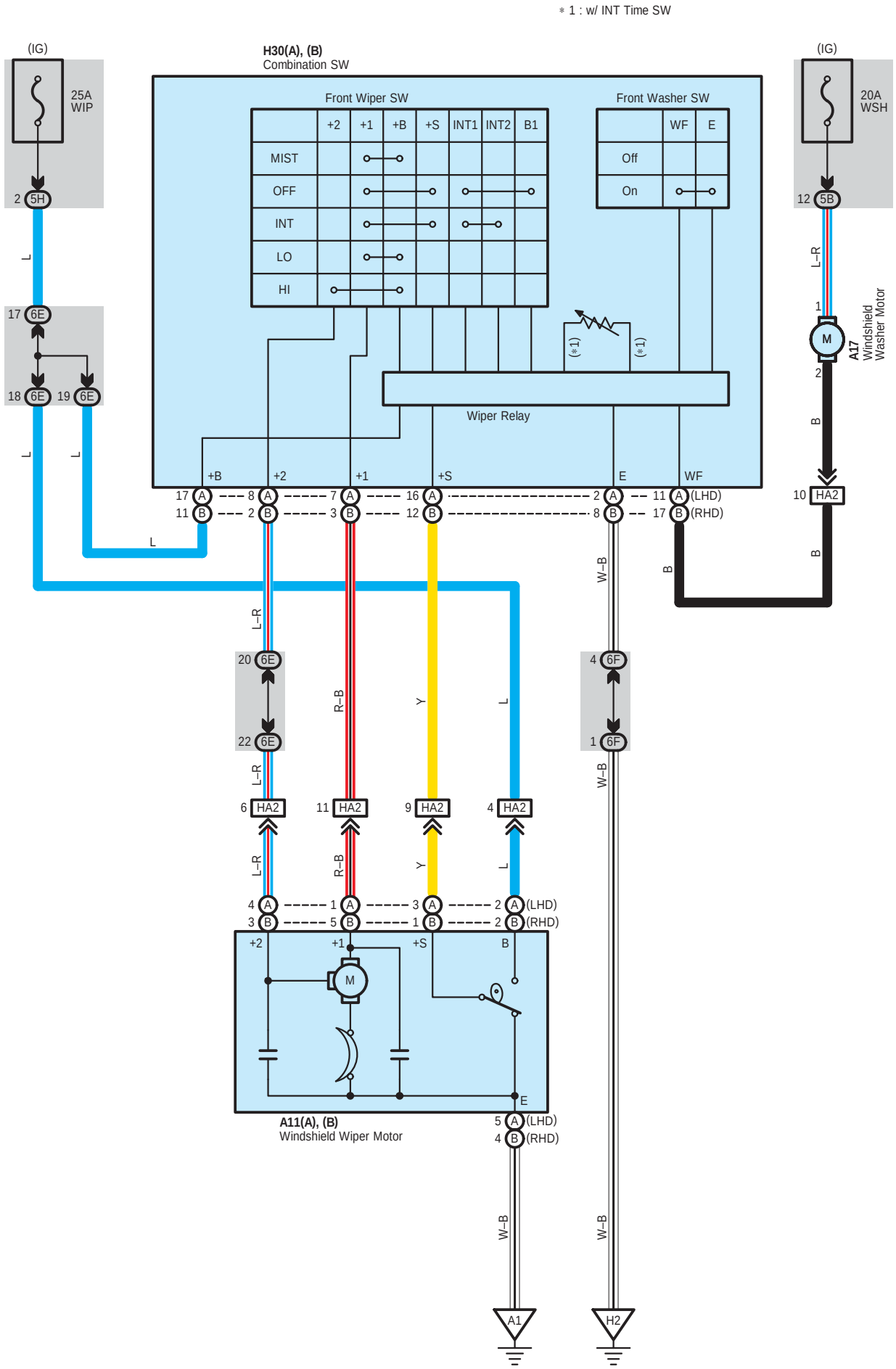
* 1 : w/ INT Time SW
(IG)
25A WIP
2 5H
H30(A), (B)
Combination SW
Front Wiper SW
+2 +1 +B +S INT1 INT2 B1
MIST
OFF
INT
LO
HI
Front Washer SW
WF E
Off
On
(*1)
(*1)
Wiper Relay
+B +2 +1 +S E WF
17 A 11 B (LHD) (RHD)
8 A 2 B
7 A 3 B
16 A 12 B
2 A 8 B
11 A 17 B
(IG)
20A WSH
12 5B
L-R
1
M
2
A17
Windshield Washer Motor
B
10 HA2
B
17 6E
18 6E
19 6E
L
L
L
W-B
B
L-R
20 6E
22 6E
4 6F
1 6F
W-B
L-R
R-B
Y
L
6 HA2
11 HA2
9 HA2
4 HA2
L-R
R-B
Y
L
4 A 3 B (LHD) (RHD)
1 A 5 B
3 A 1 B
2 A 2 B
+2 +1 +S B
M
E
A11(A), (B)
Windshield Wiper Motor
5 A (LHD)
4 B (RHD)
W-B
W-B
A1
H2

**System Outline**

With the ignition SW turned on, the current flows to TERMINAL 17 (LHD), 11 (RHD) of the front wiper and washer SW and TERMINAL 2 of the windshield wiper motor through the WIP fuse and TERMINAL 1 of the windshield washer motor through the WSH fuse.

**1. Low Speed Position**

With the front wiper SW turned to LO position, the current flows from TERMINAL 17 (LHD), 11 (RHD) of the front wiper and washer SW to TERMINAL 7 (LHD), 3 (RHD) to TERMINAL 1 (LHD), 5 (RHD) of the windshield wiper motor to TERMINAL 5 (LHD), 4 (RHD) to GROUND and causes the windshield wiper motor to run at low speed.

**2. High Speed Position**

With the front wiper SW turned to HI position, the current flows from TERMINAL 17 (LHD), 11 (RHD) of the front wiper and washer SW to TERMINAL 8 (LHD), 1 (RHD) to TERMINAL 4 (LHD), 3 (RHD) of the windshield wiper motor to TERMINAL 5 (LHD), 4 (RHD) to GROUND and causes the windshield wiper motor to run at high speed.

**3. INT Position**

With the front wiper SW turned to INT position, the wiper relay operates and current flows from TERMINAL 17 (LHD), 11 (RHD) of the front wiper and washer SW to TERMINAL 2 (LHD), 8 (RHD) to GROUND. This activates the intermittent circuit and the current flows from TERMINAL 17 (LHD), 11 (RHD) of the front wiper and washer SW to TERMINAL 7 (LHD), 3 (RHD) to TERMINAL 1 (LHD), 5 (RHD) of the windshield wiper motor to TERMINAL 5 (LHD), 4 (RHD) to GROUND and the wiper operates.
The intermittent operation is controlled by the charge/discharge function of the condenser installed in the relay, and the intermittent time is controlled by a time control SW to change the charging time of the condenser (w/ INT time SW).
Intermittent operation is controlled by a condenser charge and discharge function in the relay (w/o INT time SW).

**4. Mist Position**

With the front wiper SW turned to MIST position, the current flows from TERMINAL 17 (LHD), 11 (RHD) of the front wiper and washer SW to TERMINAL 7 (LHD), 3 (RHD) to TERMINAL 1 (LHD), 5 (RHD) of the windshield wiper motor to TERMINAL 5 (LHD), 4 (RHD) to GROUND and causes the windshield wiper motor to run at low speed.

**5. Washer Interlocking Operation**

With the washer SW pulled to ON position, the current flows from the WSH fuse to TERMINAL 1 of the windshield washer motor to TERMINAL 2 to TERMINAL 11 (LHD), 17 (RHD) of the front wiper and washer SW to TERMINAL 2 (LHD), 8 (RHD) to GROUND and causes the windshield washer motor to run and the window washer to spray. Simultaneously, current flows from the WIP fuse to TERMINAL 17 (LHD), 11 (RHD) of the front wiper and washer SW to TERMINAL 7 (LHD), 3 (RHD) to TERMINAL 1 (LHD), 5 (RHD) of the windshield wiper motor to TERMINAL 5 (LHD), 4 (RHD) to GROUND, causing the wiper to function.

**○ : Parts Location**

| Code | | See Page | Code | See Page | Code | | See Page |
|---|---|---|---|---|---|---|---|
| A11 | A | 48 (LHD) | A17 | 48 (LHD) | H30 | A | 49 (LHD) |
| | B | 56 (RHD) | | 56 (RHD) | | B | 57 (RHD) |

**⬭ : Junction Block and Wire Harness Connector**

| Code | See Page | Junction Block and Wire Harness (Connector Location) |
|---|---|---|
| 5B | 30 | Cowl to Head Lamp Wire and Instrument Panel J/B (Left Side of Instrument Panel) |
| 5H | 30 | Instrument Panel Wire and Instrument Panel J/B (Left Side of Instrument Panel) |
| 6E | 38 (LHD) | Instrument Panel Wire and Center J/B (Instrument Panel Reinforcement LH) |
| | 38 (RHD) | Instrument Panel Wire and Center J/B (Instrument Panel Reinforcement RH) |
| 6F | 38 (LHD) | Instrument Panel Wire and Center J/B (Instrument Panel Reinforcement LH) |
| | 38 (RHD) | Instrument Panel Wire and Center J/B (Instrument Panel Reinforcement RH) |

**▭ : Connector Joining Wire Harness and Wire Harness**

| Code | See Page | Joining Wire Harness and Wire Harness (Connector Location) |
|---|---|---|
| HA2 | 64 (LHD) | Instrument Panel Wire and Cowl to Head Lamp Wire (Under the Instrument Panel J/B) |
| | 72 (RHD) | |

▽ : **Ground Points**

| Code | See Page | Ground Points Location |
|---|---|---|
| A1 | 64 (LHD) | Dash Panel Right |
| | 72 (RHD) | |
| H2 | 64 (LHD) | Instrument Panel Reinforcement |
| | 72 (RHD) | |

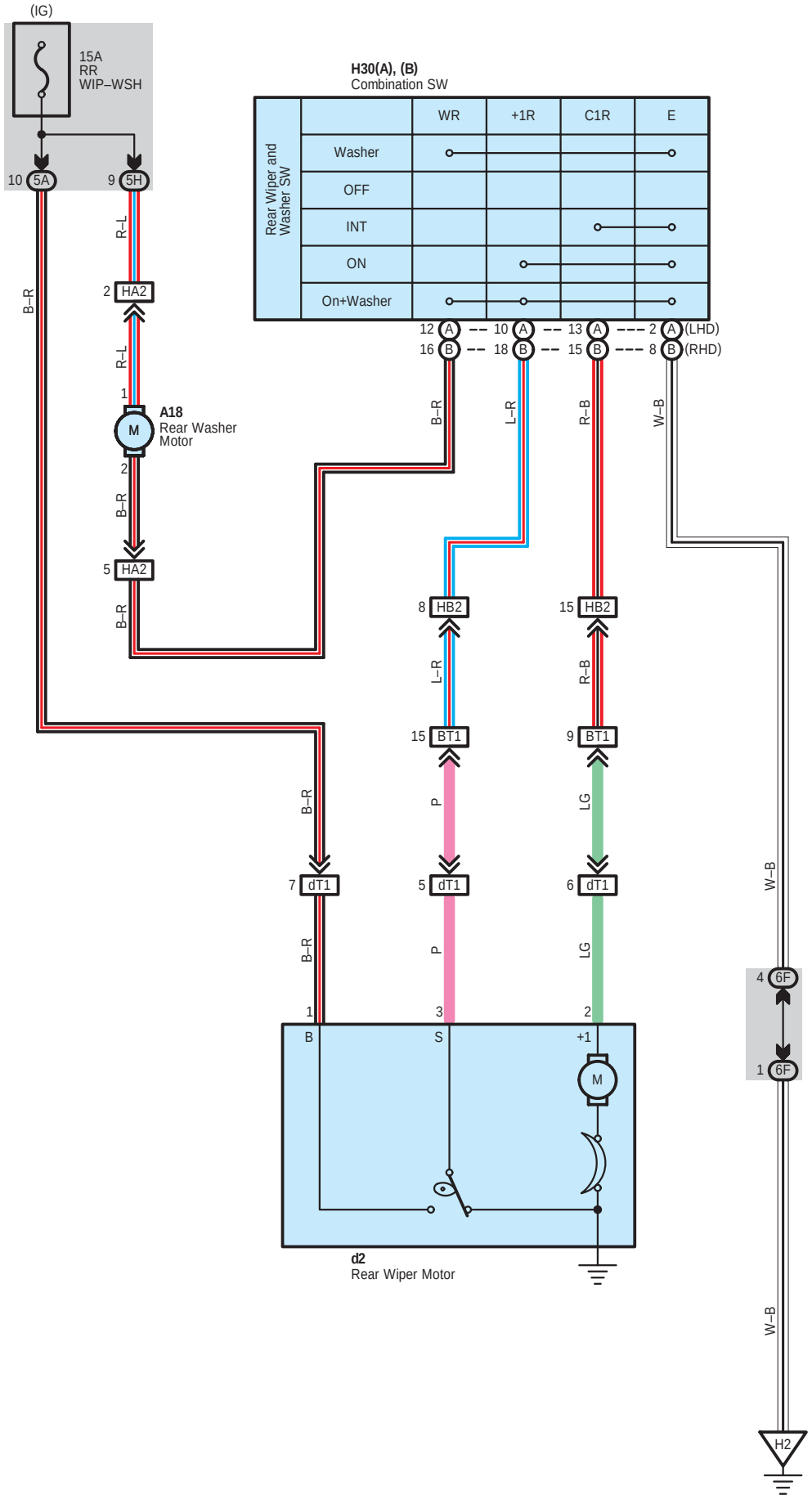
(IG)
15A
RR
WIP–WSH
10 5A
9 5H
B–R
R–L
2 HA2
R–L
1
A18
Rear Washer
Motor
M
2
B–R
5 HA2
B–R
H30(A), (B)
Combination SW
Rear Wiper and Washer SW
WR
+1R
C1R
E
Washer
OFF
INT
ON
On+Washer
12 A
16 B
10 A
18 B
13 A
15 B
2 A (LHD)
8 B (RHD)
B–R
L–R
R–B
W–B
8 HB2
15 HB2
L–R
R–B
15 BT1
9 BT1
P
LG
B–R
7 dT1
5 dT1
6 dT1
W–B
B–R
P
LG
1
3
2
4 6F
1 6F
B
S
+1
M
d2
Rear Wiper Motor
W–B
H2

**System Outline**

When the ignition SW is turned on, current flows to TERMINAL 1 of the rear washer motor, TERMINAL 1 of the rear wiper motor through the RR WIP–WSH fuse.

**1. Rear Wiper Normal Operation**

With the ignition SW turned on and rear wiper and washer SW turned to ON position, current flows to TERMINAL 1 of the rear wiper motor to TERMINAL 10 (LHD), 18 (RHD) of the rear wiper and washer SW to TERMINAL 2 (LHD), 8 (RHD) to GROUND. Causing the rear wiper motor operated.

**2. Washer Operation**

With the ignition SW turned on and the rear wiper and washer SW turned to ON position, when the wiper SW is turned further (ON+ washer position), current flows to TERMINAL 1 of the rear washer motor to TERMINAL 2 to TERMINAL 12 (LHD), 16 (RHD) of the rear wiper and washer SW to TERMINAL 2 (LHD), 8 (RHD) to GROUND so that the rear washer motor rotates and the window washer emits a water, only while the switch is fully turned.
When the wiper SW is off and then turned to washer position (Wiper off side), only the washer operates.

**○ : Parts Location**

| Code | See Page | Code | | See Page | Code | See Page |
|---|---|---|---|---|---|---|
| A18 | 48 (LHD) | H30 | A | 49 (LHD) | d2 | 51 (LHD) |
| | 56 (RHD) | | B | 57 (RHD) | | 59 (RHD) |

**⬭ : Junction Block and Wire Harness Connector**

| Code | See Page | Junction Block and Wire Harness (Connector Location) |
|---|---|---|
| 5A | 30 | Roof Wire and Instrument Panel J/B (Left Side of Instrument Panel) |
| 5H | 30 | Instrument Panel Wire and Instrument Panel J/B (Left Side of Instrument Panel) |
| 6F | 38 (LHD) | Instrument Panel Wire and Center J/B (Instrument Panel Reinforcement LH) |
| | 38 (RHD) | Instrument Panel Wire and Center J/B (Instrument Panel Reinforcement RH) |

**▭ : Connector Joining Wire Harness and Wire Harness**

| Code | See Page | Joining Wire Harness and Wire Harness (Connector Location) |
|---|---|---|
| BT1 | 64 (LHD) | Engine Room Main Wire and Roof Wire (Cowl Side Panel LH) |
| | 72 (RHD) | |
| HA2 | 64 (LHD) | Instrument Panel Wire and Cowl to Head Lamp Wire (Under the Instrument Panel J/B) |
| | 72 (RHD) | |
| HB2 | 64 (LHD) | Instrument Panel Wire and Engine Room Main Wire (Under the Instrument Panel J/B) |
| | 72 (RHD) | |
| dT1 | 66 (LHD) | Back Door No.3 Wire and Roof Wire (Rear of the Left Side of the Roof Panel) |
| | 74 (RHD) | |

**▽ : Ground Points**

| Code | See Page | Ground Points Location |
|---|---|---|
| H2 | 64 (LHD) | Instrument Panel Reinforcement |
| | 72 (RHD) | |

# Power Window (LHD)

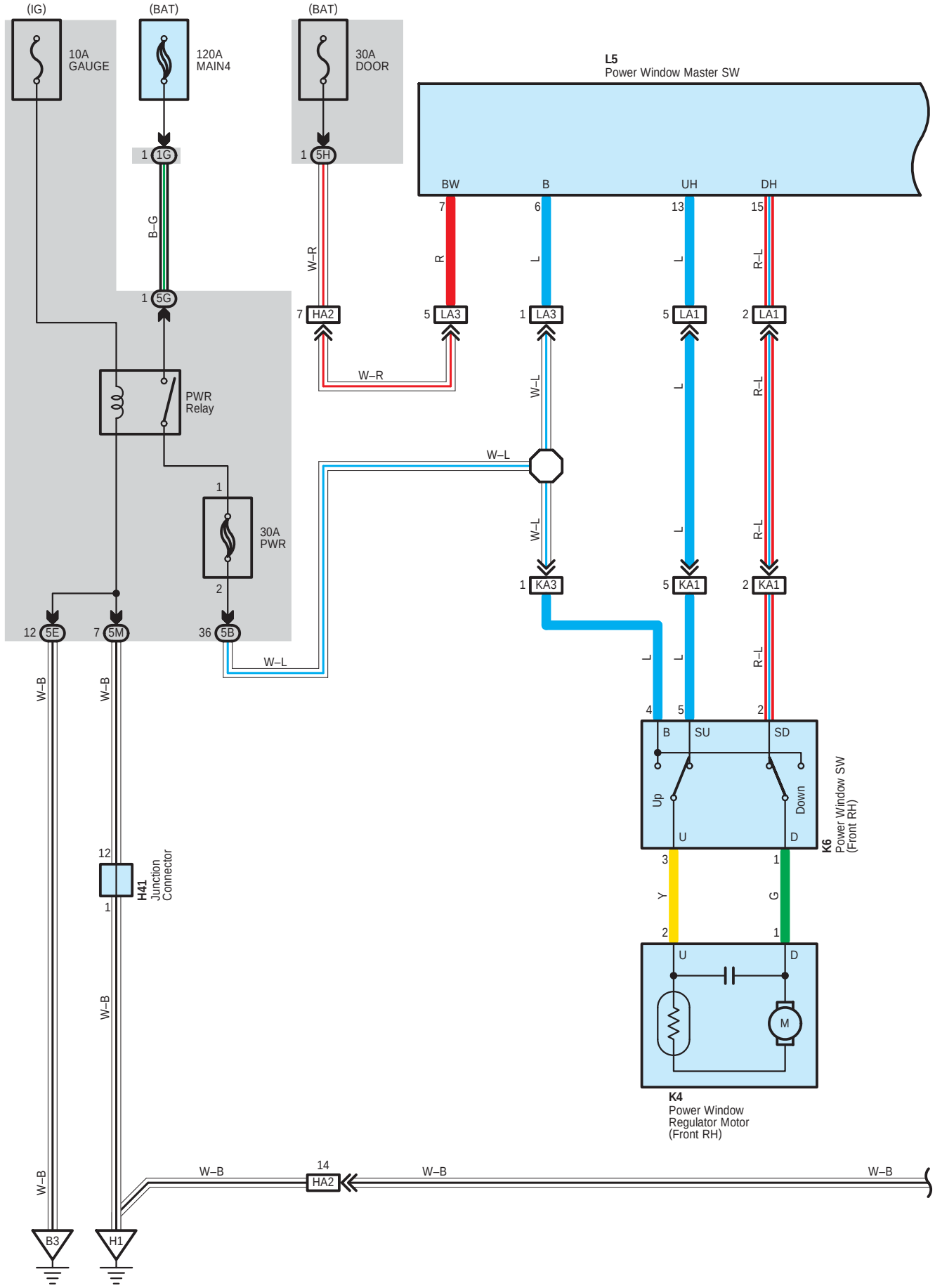

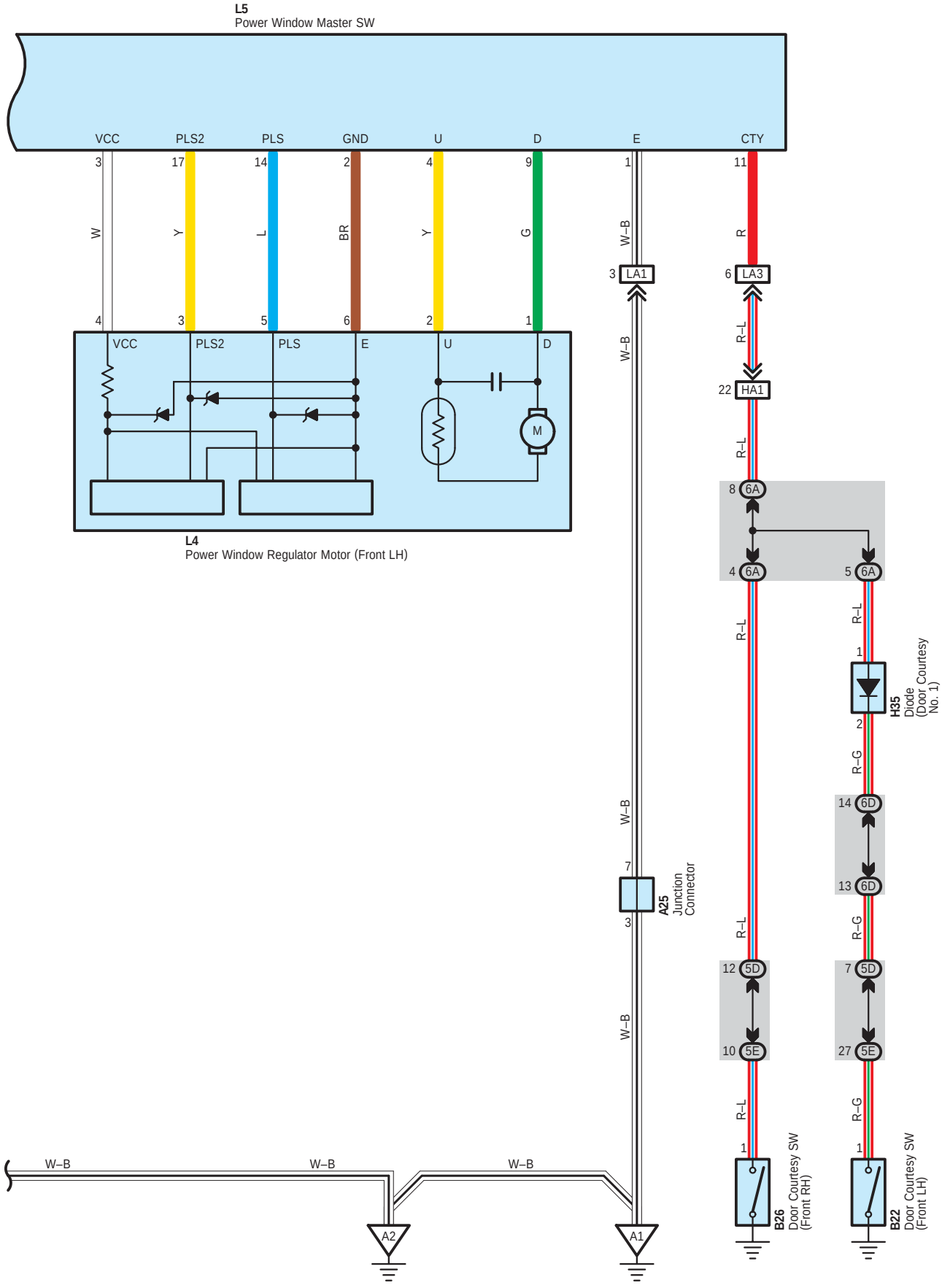
L5
Power Window Master SW
VCC
PLS2
PLS
GND
U
D
E
CTY
3
17
14
2
4
9
1
11
W
Y
L
BR
Y
G
W–B
R
4
3
5
6
2
1
3 LA1
6 LA3
R–L
22 HA1
R–L
VCC
PLS2
PLS
E
U
D
M
L4
Power Window Regulator Motor (Front LH)
8 6A
4 6A
5 6A
R–L
R–L
1
H35
Diode
(Door Courtesy
No. 1)
2
R–G
14 6D
13 6D
R–G
W–B
7
A25
Junction
Connector
3
R–L
12 5D
7 5D
10 5E
27 5E
W–B
R–L
R–G
1
1
B26
Door Courtesy SW
(Front RH)
B22
Door Courtesy SW
(Front LH)
W–B
W–B
W–B
A2
A1

# Power Window (LHD)

**System Outline**

**1. Manual Down or Up Operation**

When the power window master SW is pushed one step, the motor rotates to open the window.
When the power window master SW is pulled up one step, the motor rotates in the opposite direction, to close the window.
All the other windows can be opened/closed as well, by the operation of the power window master SW or respective power window SW.
When the window lock SW is pushed to the lock side, the ground circuit to the passenger's window becomes open. As a result, even if Open/Close operation of the passenger's window is attempted, the current from TERMINAL E of the power window master SW is not grounded and the motor does not rotate, so the passenger's window can not be operated and window lock occurs.

**2. Auto Down or Up Operation (Driver's Window)**

When the power window master SW is pushed two steps, the motor rotates to open the window automatically.
When the power window master SW is pulled up two steps, the motor rotates to close the window automatically.

**3. Jam Protection Function (Driver's Window)**

When any foreign object gets caught during power window AUTO UP operation, the motor rotates in the opposite direction to open the window.

**4. Stopping of Auto Down or Up Operation (Driver's Window)**

Auto operation can be stopped in mid–course with switching power window master SW one step downward during the up operation and upward during the down operation.

**○ : Parts Location**

| Code | See Page | Code | See Page | Code | See Page |
|---|---|---|---|---|---|
| A25 | 48 (LHD) | H35 | 49 (LHD) | K6 | 50 (LHD) |
| B22 | 50 (LHD) | H41 | 49 (LHD) | L4 | 50 (LHD) |
| B26 | 50 (LHD) | K4 | 50 (LHD) | L5 | 50 (LHD) |

**⬭ : Junction Block and Wire Harness Connector**

| Code | See Page | Junction Block and Wire Harness (Connector Location) |
|---|---|---|
| 1G | 24 | Engine Room Main Wire and Engine Room J/B No.1 (Engine Compartment Front) |
| 5B | 30 | Cowl to Head Lamp Wire and Instrument Panel J/B (Left Side of Instrument Panel) |
| 5D | 30 | Instrument Panel Wire and Instrument Panel J/B (Left Side of Instrument Panel) |
| 5E | 30 | Engine Room Main Wire and Instrument Panel J/B (Left Side of Instrument Panel) |
| 5G | | |
| 5H | 30 | Instrument Panel Wire and Instrument Panel J/B (Left Side of Instrument Panel) |
| 5M | 31 | |
| 6A | 38 (LHD) | Instrument Panel Wire and Center J/B (Instrument Panel Reinforcement LH) |
| 6D | | |

**▭ : Connector Joining Wire Harness and Wire Harness**

| Code | See Page | Joining Wire Harness and Wire Harness (Connector Location) |
|---|---|---|
| HA1 | 64 (LHD) | Instrument Panel Wire and Cowl to Head Lamp Wire (Under the Instrument Panel J/B) |
| HA2 | | |
| KA1 | 65 (LHD) | Front Door RH Wire and Cowl to Head Lamp Wire (Right Kick Panel) |
| KA3 | | |
| LA1 | 65 (LHD) | Front Door LH Wire and Cowl to Head Lamp Wire (Left Kick Panel) |
| LA3 | | |

▽ : **Ground Points**

| Code | See Page | Ground Points Location |
|---|---|---|
| A1 | 64 (LHD) | Dash Panel Right |
| A2 | 64 (LHD) | Dash Panel Left |
| B3 | 60 (*1) | Front Floor Panel Left |
| | 61 (*2) | |
| | 62 (*3) | |
| H1 | 64 (LHD) | Instrument Panel Reinforcement |

* 1 : LHD 2TR–FE * 2 : LHD 2KD–FTV * 3 : LHD 5L–E * 4 : RHD 2TR–FE * 5 : RHD 2KD–FTV * 6 : RHD 5L–E * 7 : 2TR–FE
* 8 : 2KD–FTV, 5L–E

# Power Window (RHD)

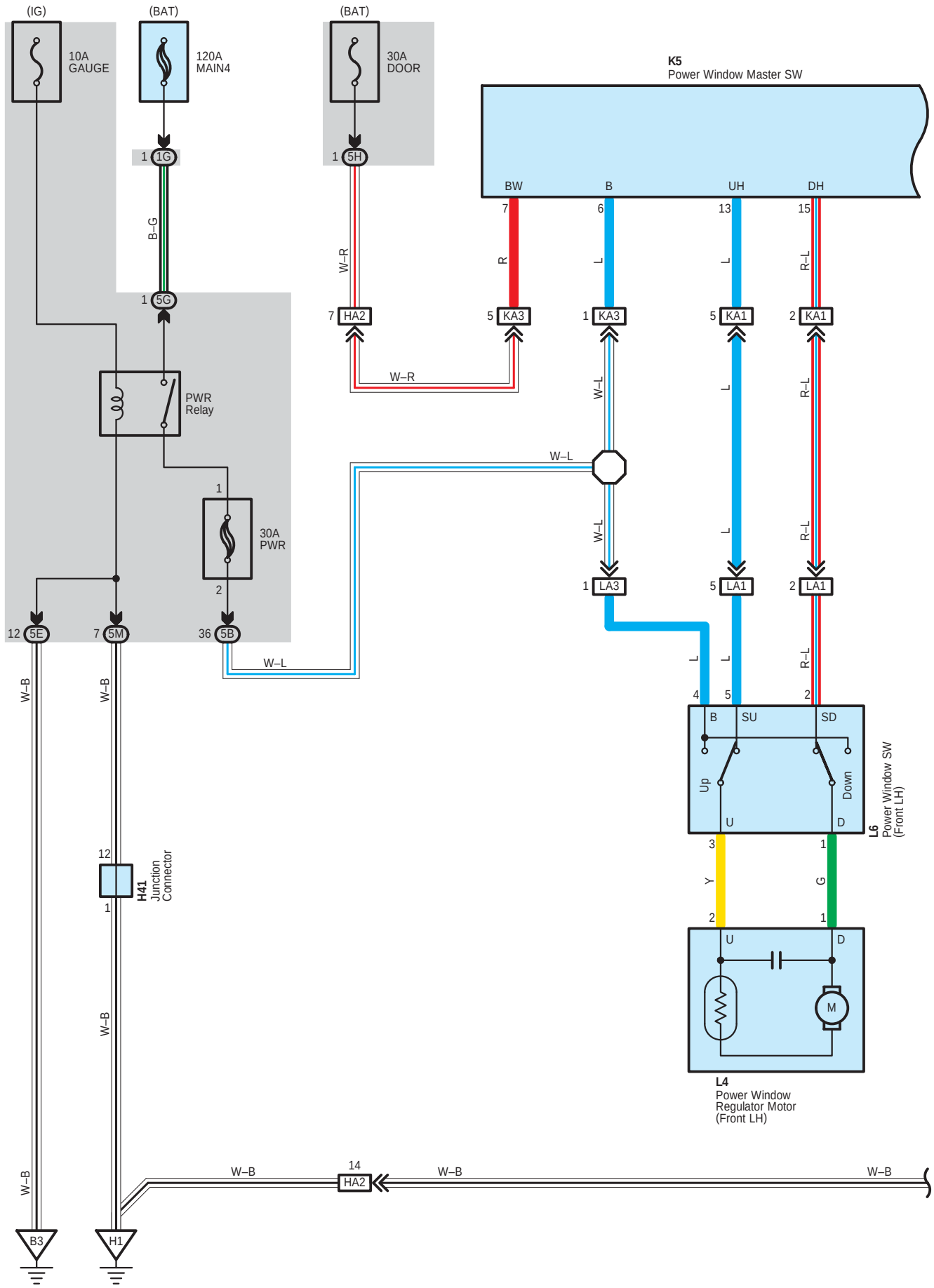

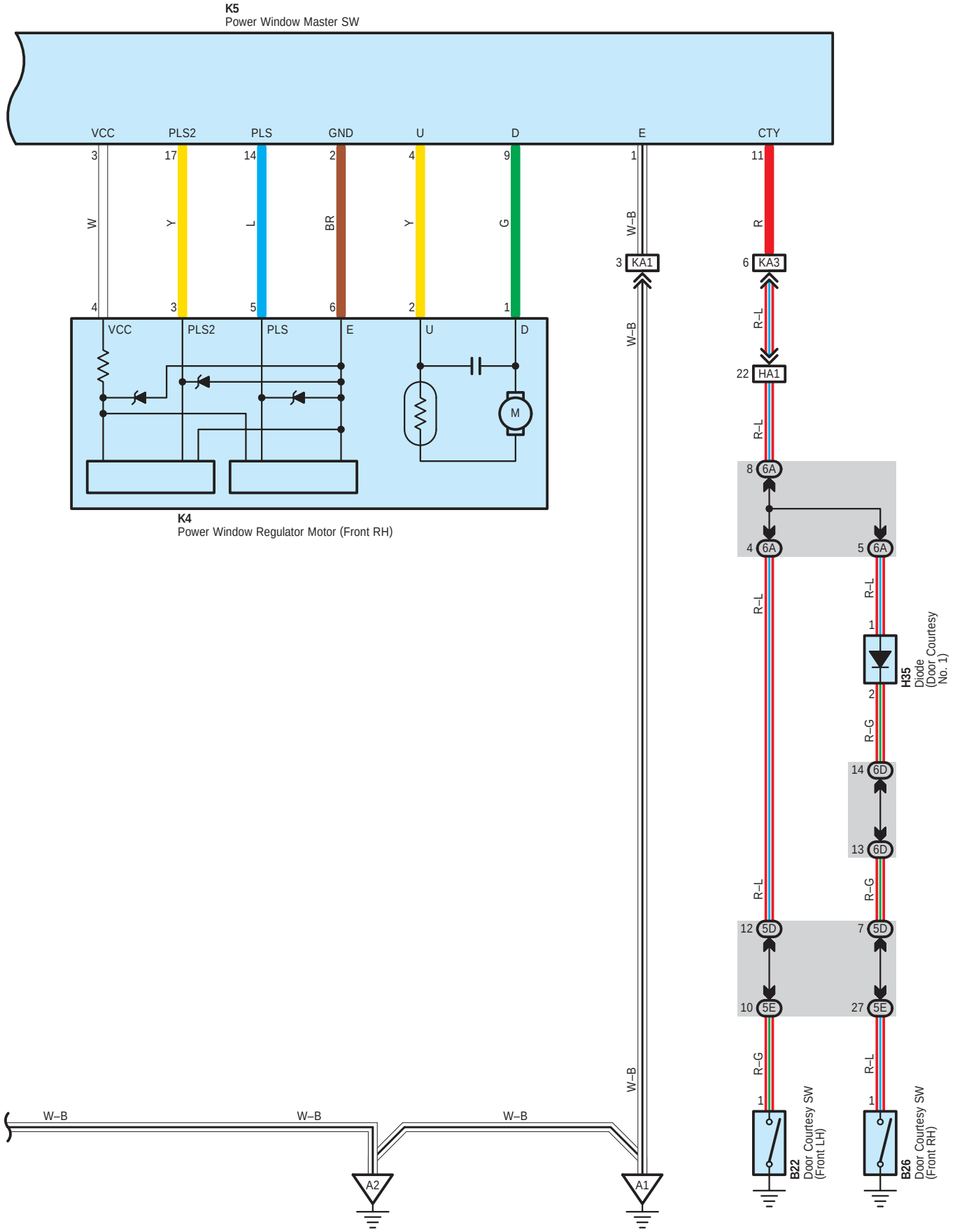
K5
Power Window Master SW
VCC
PLS2
PLS
GND
U
D
E
CTY
3
17
14
2
4
9
1
11
W
Y
L
BR
Y
G
W–B
R
4
3
5
6
2
1
3 KA1
6 KA3
W–B
R–L
22 HA1
R–L
8 6A
4 6A
5 6A
R–L
R–L
1
2
H35
Diode
(Door Courtesy
No. 1)
R–G
14 6D
13 6D
R–L
R–G
12 5D
7 5D
10 5E
27 5E
R–G
R–L
1
1
B22
Door Courtesy SW
(Front LH)
B26
Door Courtesy SW
(Front RH)
K4
Power Window Regulator Motor (Front RH)
M
W–B
W–B
W–B
W–B
A2
A1

# Power Window (RHD)

**System Outline**

**1. Manual Down or Up Operation**

When the power window master SW is pushed one step, the motor rotates to open the window.
When the power window master SW is pulled up one step, the motor rotates in the opposite direction, to close the window.
All the other windows can be opened/closed as well, by the operation of the power window master SW or respective power window SW.
When the window lock SW is pushed to the lock side, the ground circuit to the passenger's window becomes open. As a result, even if Open/Close operation of the passenger's window is attempted, the current from TERMINAL E of the power window master SW is not grounded and the motor does not rotate, so the passenger's window can not be operated and window lock occurs.

**2. Auto Down or Up Operation (Driver's Window)**

When the power window master SW is pushed two steps, the motor rotates to open the window automatically.
When the power window master SW is pulled up two steps, the motor rotates to close the window automatically.

**3. Jam Protection Function (Driver's Window)**

When any foreign object gets caught during power window AUTO UP operation, the motor rotates in the opposite direction to open the window.

**4. Stopping of Auto Down or Up Operation (Driver's Window)**

Auto operation can be stopped in mid–course with switching power window master SW one step downward during the up operation and upward during the down operation.

**○ : Parts Location**

| Code | See Page | Code | See Page | Code | See Page |
|---|---|---|---|---|---|
| B22 | 58 (RHD) | H41 | 57 (RHD) | L4 | 58 (RHD) |
| B26 | 58 (RHD) | K4 | 58 (RHD) | L6 | 58 (RHD) |
| H35 | 57 (RHD) | K5 | 58 (RHD) | | |

**⬭ : Junction Block and Wire Harness Connector**

| Code | See Page | Junction Block and Wire Harness (Connector Location) |
|---|---|---|
| 1G | 24 | Engine Room Main Wire and Engine Room J/B No.1 (Engine Compartment Front) |
| 5B | 30 | Cowl to Head Lamp Wire and Instrument Panel J/B (Left Side of Instrument Panel) |
| 5D | 30 | Instrument Panel Wire and Instrument Panel J/B (Left Side of Instrument Panel) |
| 5E | 30 | Engine Room Main Wire and Instrument Panel J/B (Left Side of Instrument Panel) |
| 5G | | |
| 5H | 30 | Instrument Panel Wire and Instrument Panel J/B (Left Side of Instrument Panel) |
| 5M | 31 | |
| 6A | 38 (RHD) | Instrument Panel Wire and Center J/B (Instrument Panel Reinforcement RH) |
| 6D | | |

**▭ : Connector Joining Wire Harness and Wire Harness**

| Code | See Page | Joining Wire Harness and Wire Harness (Connector Location) |
|---|---|---|
| HA1 | 72 (RHD) | Instrument Panel Wire and Cowl to Head Lamp Wire (Under the Instrument Panel J/B) |
| HA2 | | |
| KA1 | 73 (RHD) | Front Door RH Wire and Cowl to Head Lamp Wire (Right Kick Panel) |
| KA3 | | |
| LA1 | 73 (RHD) | Front Door LH Wire and Cowl to Head Lamp Wire (Left Kick Panel) |
| LA3 | | |

▽ : **Ground Points**

| Code | See Page | Ground Points Location |
|---|---|---|
| A1 | 72 (RHD) | Dash Panel Right |
| A2 | 72 (RHD) | Dash Panel Left |
| B3 | 68 (*4) | Front Floor Panel Left |
| | 69 (*5) | |
| | 70 (*6) | |
| H1 | 72 (RHD) | Instrument Panel Reinforcement |

* 1 : LHD 2TR–FE * 2 : LHD 2KD–FTV * 3 : LHD 5L–E * 4 : RHD 2TR–FE * 5 : RHD 2KD–FTV * 6 : RHD 5L–E * 7 : 2TR–FE
* 8 : 2KD–FTV, 5L–E

# Door Lock Control (LHD)

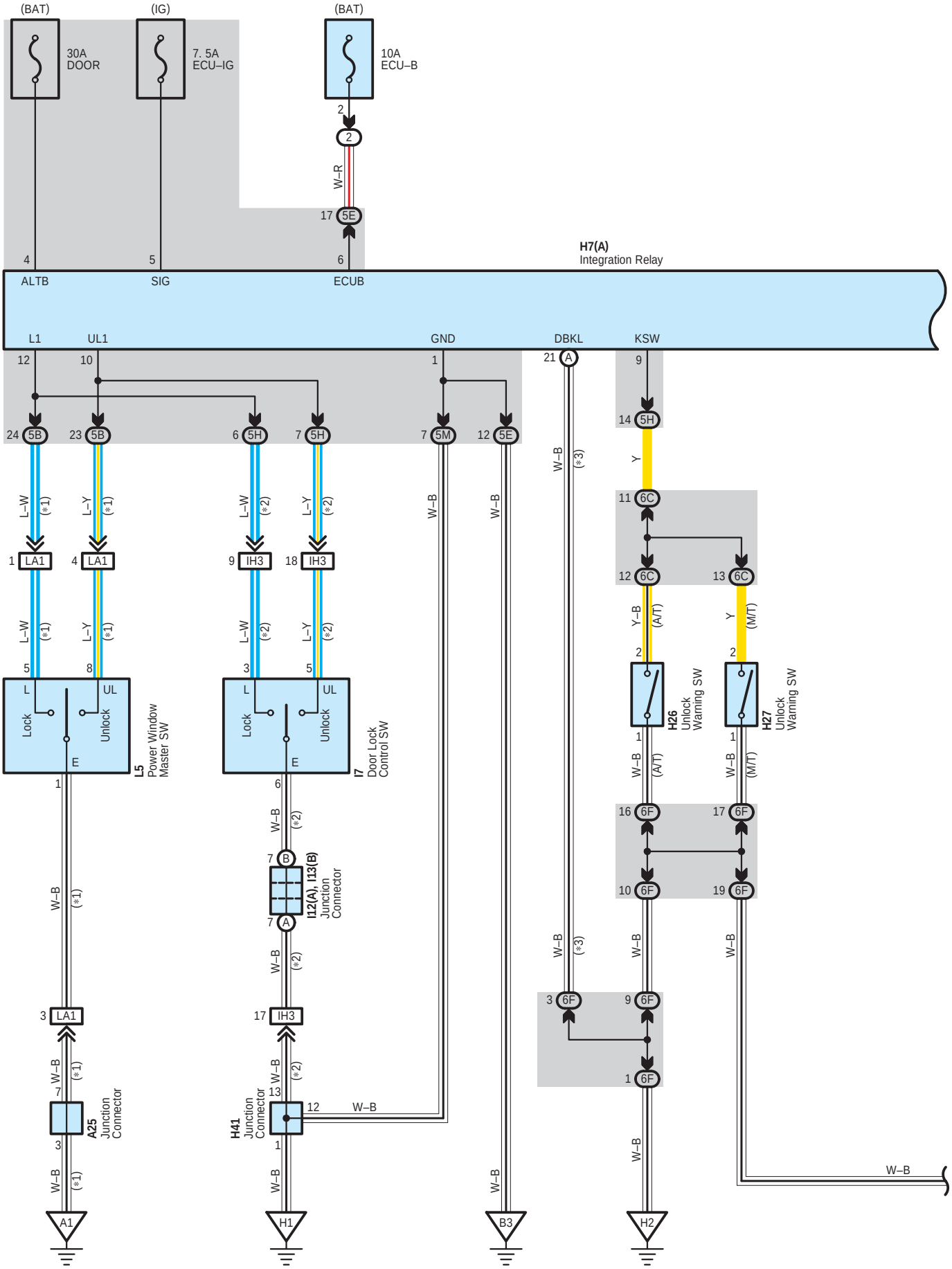

∗ 1 : w/ Power Window
∗ 2 : w/o Power Window
∗ 3 : w/ Wireless Door Lock Control
∗ 4 : 6 Speaker
∗ 5 : Except ∗4

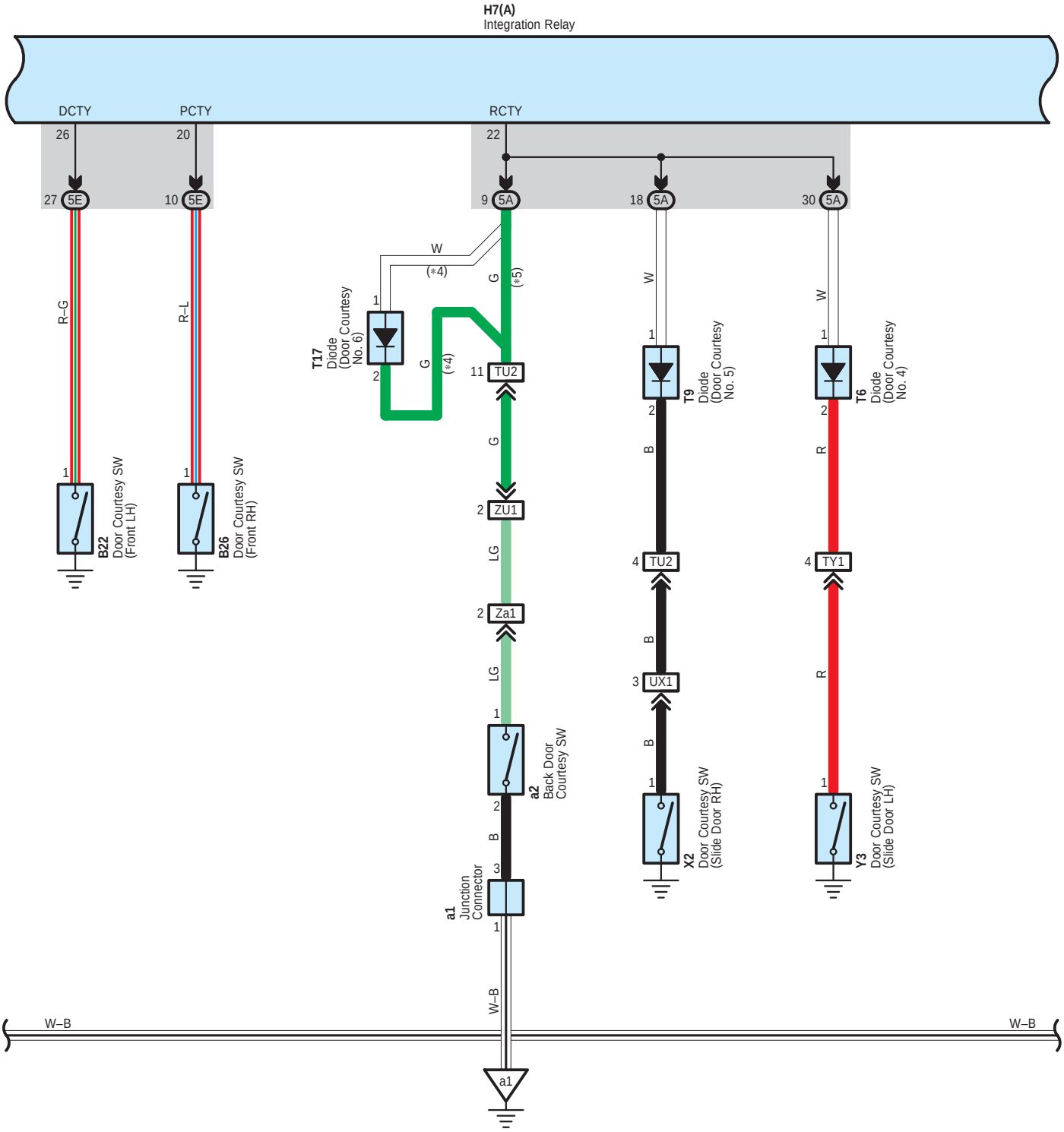

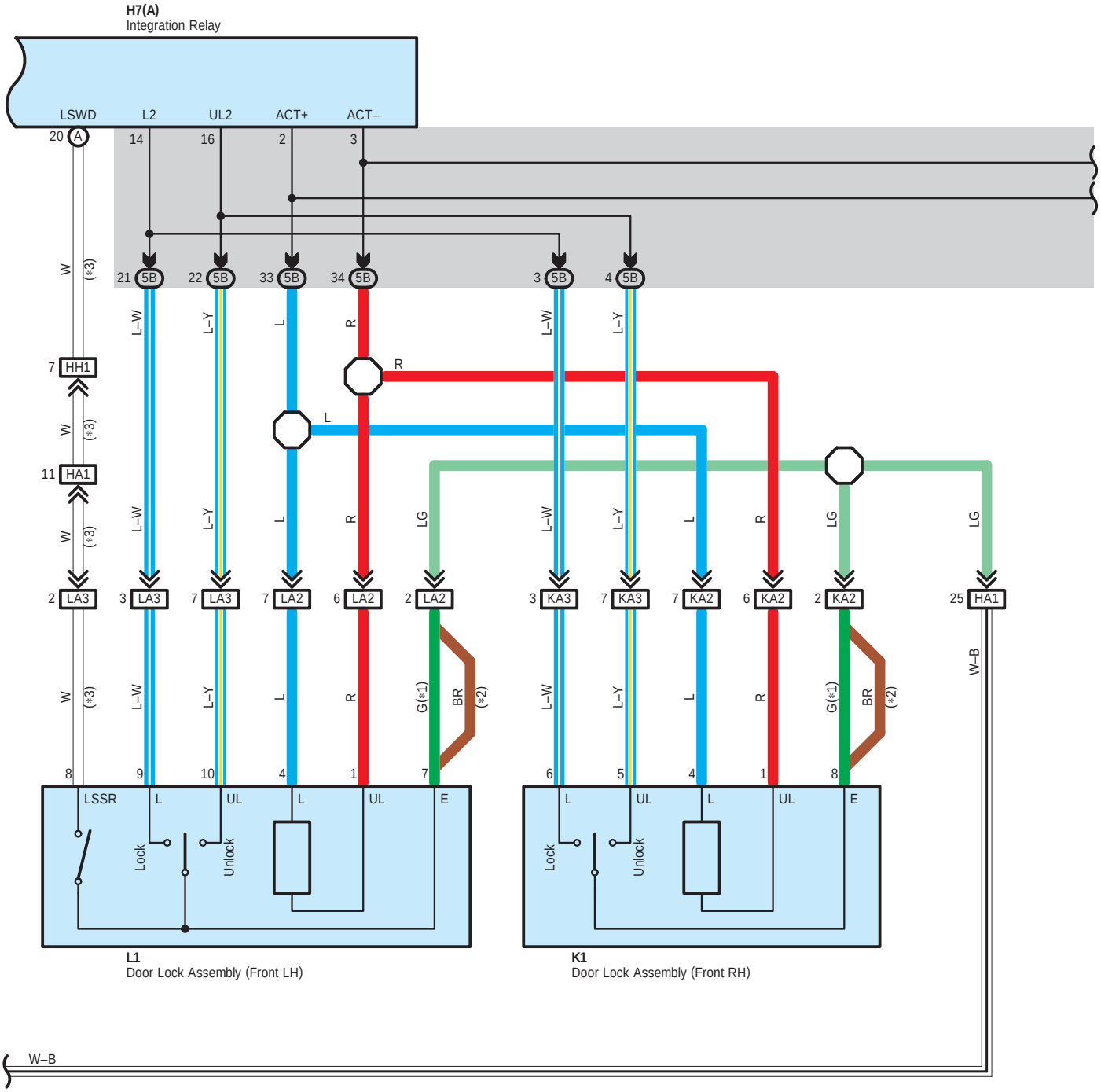
H7(A)
Integration Relay
LSWD
L2
UL2
ACT+
ACT–
20 A
14
16
2
3
21 5B
22 5B
33 5B
34 5B
3 5B
4 5B
W
(*3)
7 HH1
11 HA1
2 LA3
3 LA3
7 LA3
7 LA2
6 LA2
2 LA2
3 KA3
7 KA3
7 KA2
6 KA2
2 KA2
25 HA1
L–W
L–Y
L
R
LG
G(*1)
BR
(*2)
W–B
8
9
10
4
1
7
6
5
LSSR
L
UL
E
Lock
Unlock
L1
Door Lock Assembly (Front LH)
K1
Door Lock Assembly (Front RH)

∗ 1 : w/ Power Window
∗ 2 : w/o Power Window
∗ 3 : w/ Wireless Door Lock Control

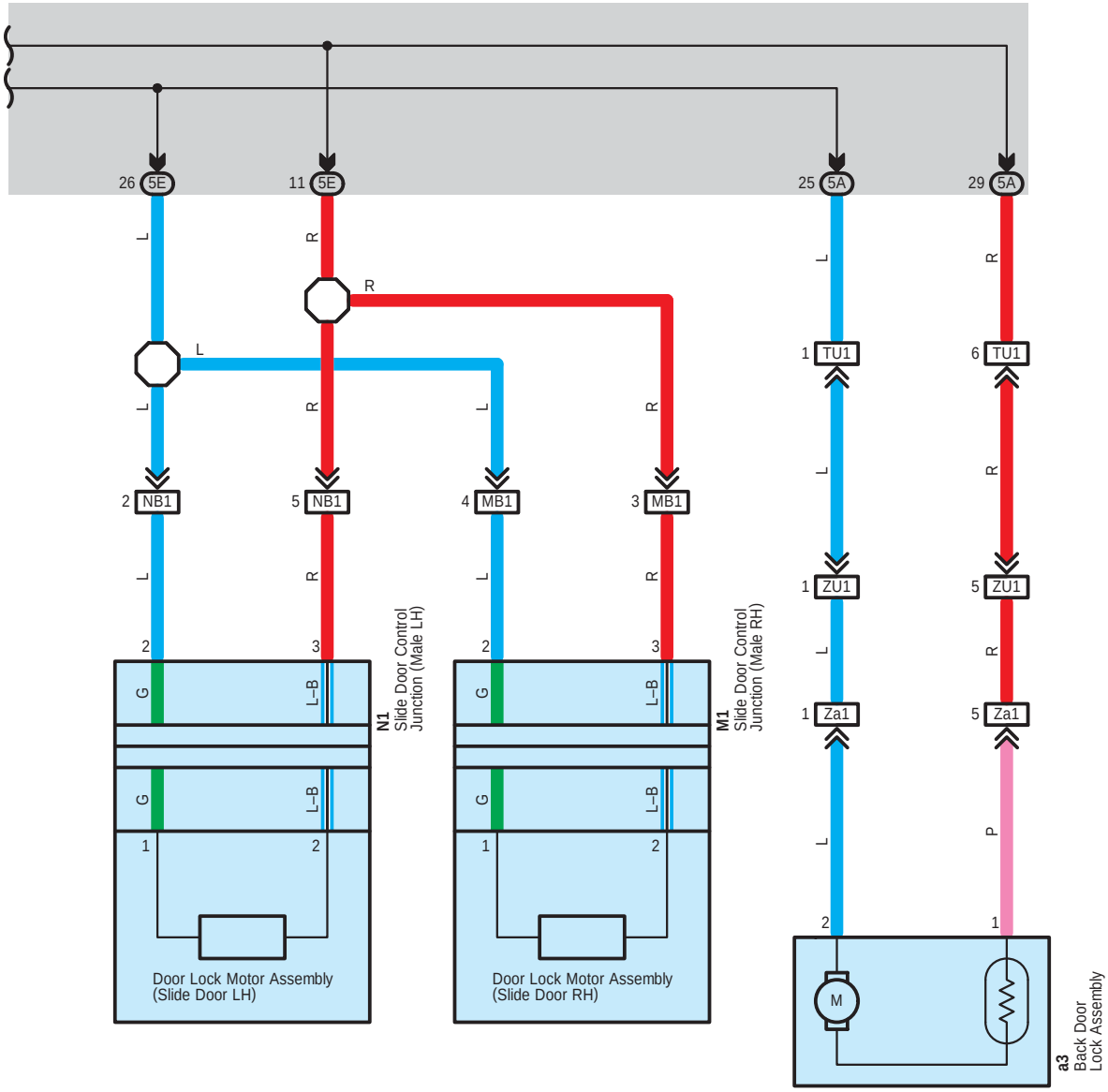

# Door Lock Control (LHD)

**System Outline**

**1. Manual Lock Operation**

When the door lock control SW or driver's side door key lock and unlock SW are operated to LOCK position, a lock signal is input to TERMINAL 14 of the integration relay and causes the integration relay to function. The current flows from TERMINAL 4 of the integration relay to TERMINAL 2 to the door lock motors to TERMINAL 3 of the integration relay to TERMINAL 1 to GROUND and the door lock motors locks the door.

**2. Manual Unlock Operation**

When the door lock control SW or driver's side door key lock and unlock SW are operated to UNLOCK position, an unlock signal is input to TERMINAL 16 of the integration relay and causes the integration relay to function. The current flows from TERMINAL 4 of the integration relay to TERMINAL 3 to the door lock motors to TERMINAL 2 of the integration relay to TERMINAL 1 to GROUND and the door lock motors unlocks the door.

**3. Ignition Key Reminder Operation**

The doors can not be locked unless the key is removed from the ignition key cylinder.

**: Parts Location**

| Code | See Page | Code | See Page | Code | See Page |
|---|---|---|---|---|---|
| A25 | 48 (LHD) | I12 A | 48 (LHD) | T9 | 50 (LHD) |
| B22 | 50 (LHD) | I13 B | 48 (LHD) | T17 | 50 (LHD) |
| B26 | 50 (LHD) | K1 | 50 (LHD) | X2 | 51 (LHD) |
| H7 A | 49 (LHD) | L1 | 50 (LHD) | Y3 | 51 (LHD) |
| H26 | 49 (LHD) | L5 | 50 (LHD) | a1 | 51 (LHD) |
| H27 | 49 (LHD) | M1 | 50 (LHD) | a2 | 51 (LHD) |
| H41 | 49 (LHD) | N1 | 50 (LHD) | a3 | 51 (LHD) |
| I7 | 48 (LHD) | T6 | 50 (LHD) | | |

**: Relay Blocks**

| Code | See Page | Relay Blocks (Relay Block Location) |
|---|---|---|
| 2 | 28 | Engine Room R/B No.2 (Inside of Battery Room) |

**: Junction Block and Wire Harness Connector**

| Code | See Page | Junction Block and Wire Harness (Connector Location) |
|---|---|---|
| 5A | 30 | Roof Wire and Instrument Panel J/B (Left Side of Instrument Panel) |
| 5B | 30 | Cowl to Head Lamp Wire and Instrument Panel J/B (Left Side of Instrument Panel) |
| 5E | 30 | Engine Room Main Wire and Instrument Panel J/B (Left Side of Instrument Panel) |
| 5H | 30 | Instrument Panel Wire and Instrument Panel J/B (Left Side of Instrument Panel) |
| 5M | 31 | |
| 6C | 38 (LHD) | Instrument Panel Wire and Center J/B (Instrument Panel Reinforcement LH) |
| 6F | | |

**: Connector Joining Wire Harness and Wire Harness**

| Code | See Page | Joining Wire Harness and Wire Harness (Connector Location) |
|---|---|---|
| HA1 | 64 (LHD) | Instrument Panel Wire and Cowl to Head Lamp Wire (Under the Instrument Panel J/B) |
| HH1 | 64 (LHD) | Instrument Panel Wire and Instrument Panel Wire (Near the Steering Column) |
| IH3 | 64 (LHD) | Instrument Panel No.2 Wire and Instrument Panel Wire (Instrument Panel Reinforcement RH) |
| KA2 | 65 (LHD) | Front Door RH Wire and Cowl to Head Lamp Wire (Right Kick Panel) |
| KA3 | | |
| LA1 | 65 (LHD) | Front Door LH Wire and Cowl to Head Lamp Wire (Left Kick Panel) |
| LA2 | | |
| LA3 | | |
| MB1 | 60 (*1) | Pillar No.1 Wire and Engine Room Main Wire (RH Side Battery Room) |
| | 61 (*2) | |
| | 62 (*3) | |
| NB1 | 60 (*1) | Pillar No.2 Wire and Engine Room Main Wire (LH Side Battery Room) |
| | 61 (*2) | |
| | 62 (*3) | |
| TU1 | 66 (LHD) | Roof Wire and Roof No.2 Wire (Rear of the Left Side of the Roof Panel) |
| TU2 | | |
| TY1 | 66 (LHD) | Roof Wire and Luggage Room No.3 Wire (Left Quarter Panel) |
| UX1 | 66 (LHD) | Roof No.2 Wire and Luggage Room No.2 Wire (Right Quarter Panel) |
| ZU1 | 66 (LHD) | Back Door No.1 Wire and Roof No.2 Wire (Rear of the Right Side of the Roof Panel) |
| Za1 | 66 (LHD) | Back Door No.1 Wire and Back Door No.2 Wire (Right Side of Back Door) |

**: Ground Points**

| Code | See Page | Ground Points Location |
|---|---|---|
| A1 | 64 (LHD) | Dash Panel Right |
| B3 | 60 (*1) | Front Floor Panel Left |
| | 61 (*2) | |
| | 62 (*3) | |
| H1 | 64 (LHD) | Instrument Panel Reinforcement |
| H2 | | |
| a1 | 66 (LHD) | Back Door Right |

* 1 : LHD 2TR–FE * 2 : LHD 2KD–FTV * 3 : LHD 5L–E * 4 : RHD 2TR–FE * 5 : RHD 2KD–FTV * 6 : RHD 5L–E * 7 : 2TR–FE
* 8 : 2KD–FTV, 5L–E

# Door Lock Control (RHD)

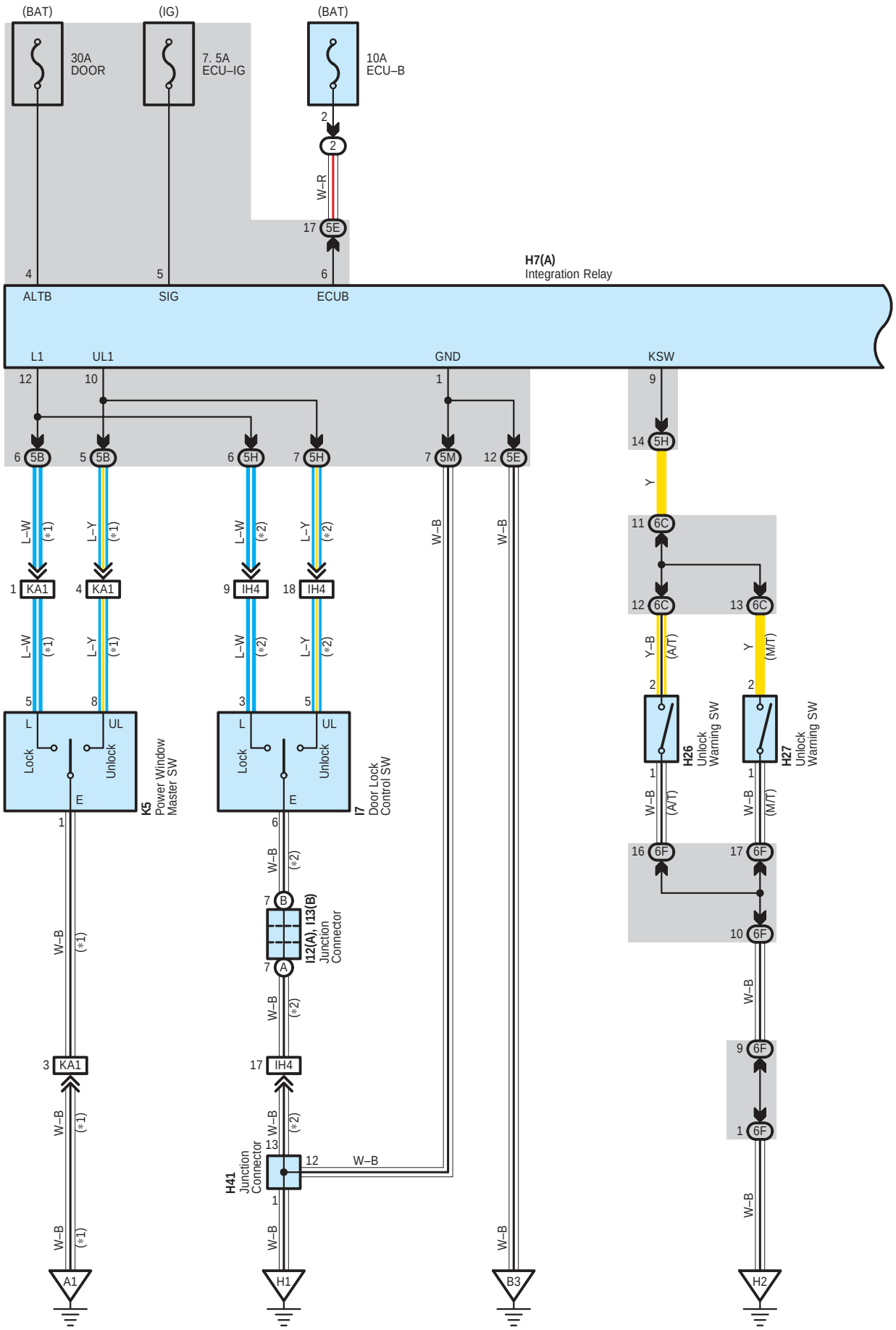

∗ 1 : w/ Power Window
∗ 2 : w/o Power Window
∗ 3 : w/ Wireless Door Lock Control
∗ 4 : 2TR–FE w/o Wireless Door Lock Control, 2KD–FTV w/o Wireless Door Lock Control

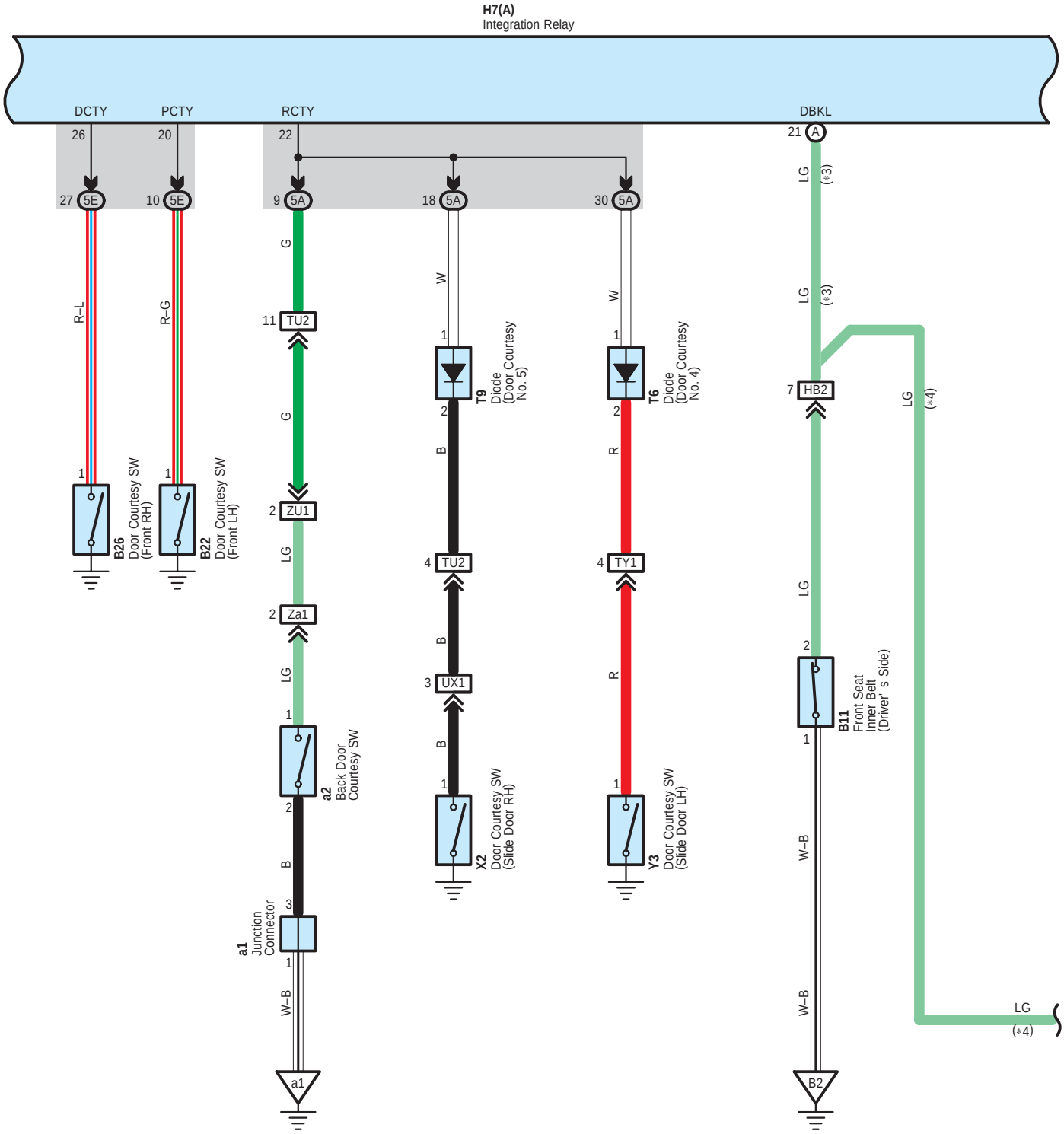

# Door Lock Control (RHD)

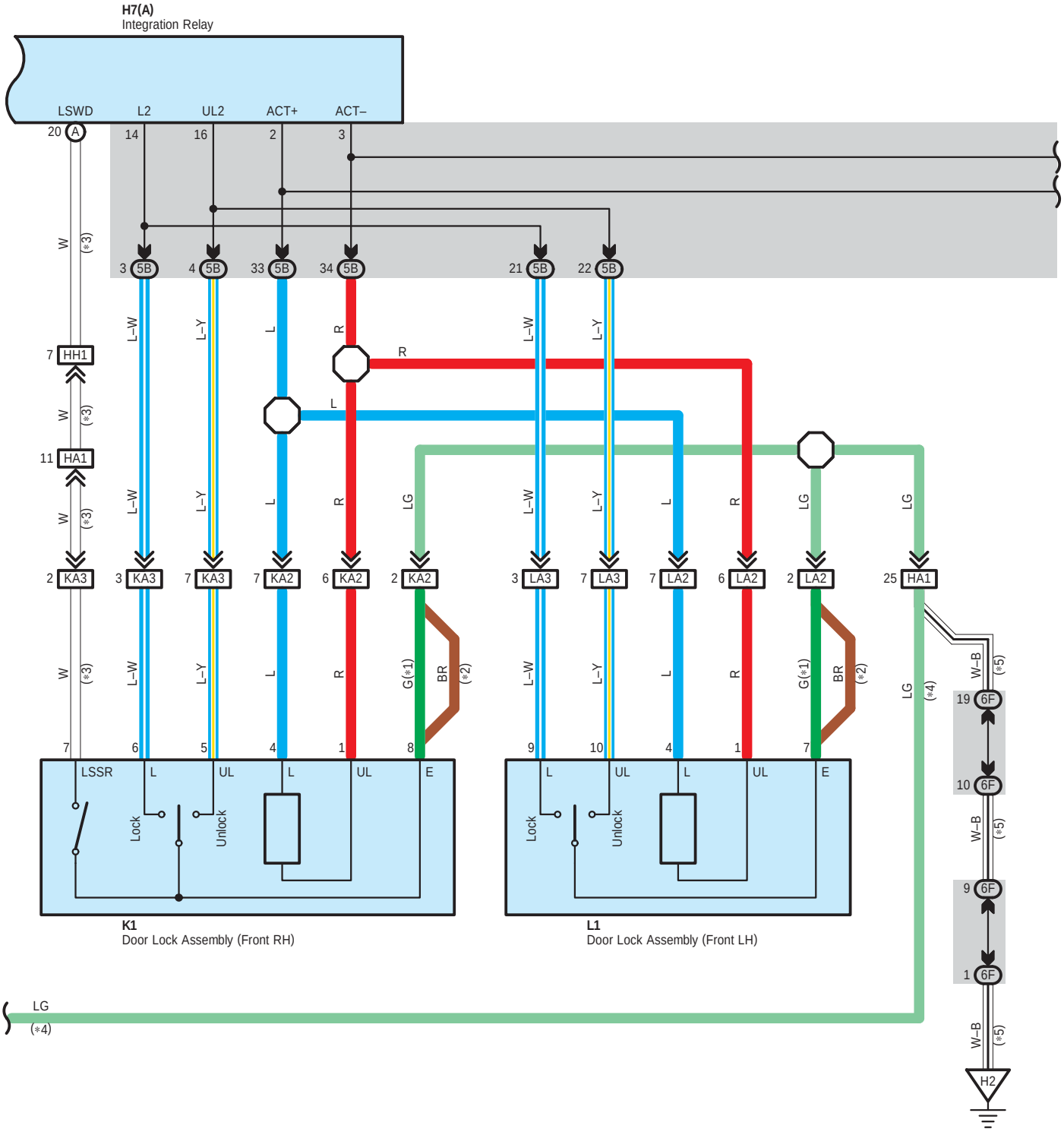

∗ 1 : w/ Power Window
∗ 2 : w/o Power Window
∗ 3 : w/ Wireless Door Lock Control
∗ 4 : 2TR–FE w/o Wireless Door Lock Control, 2KD–FTV w/o Wireless Door Lock Control
∗ 5 : 5L–E, 2TR–FE ∗3, 2KD–FTV ∗3

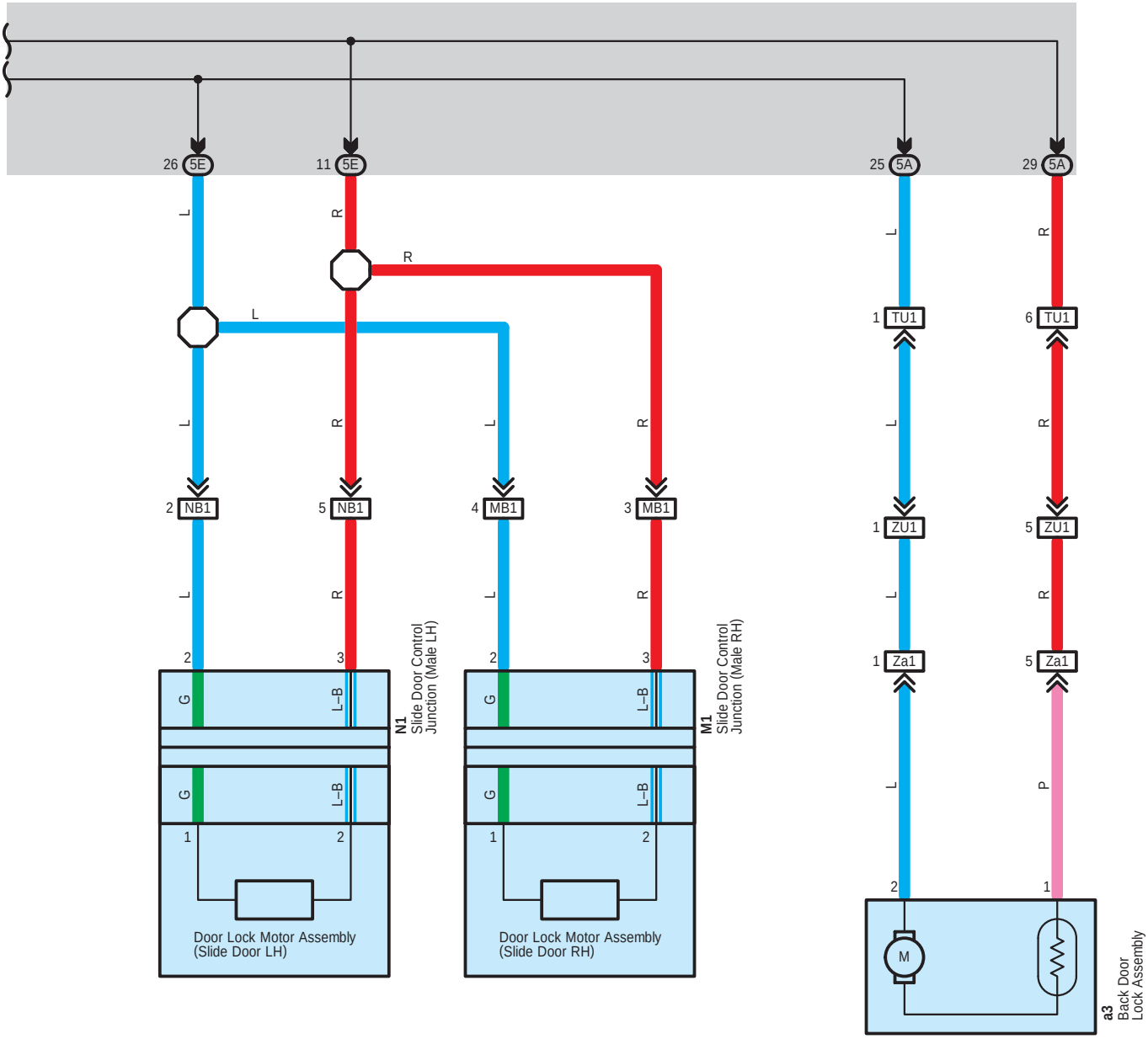

# Door Lock Control (RHD)

**System Outline**

**1. Manual Lock Operation**

When the door lock control SW or driver's side door key lock and unlock SW are operated to LOCK position, a lock signal is input to TERMINAL 14 of the integration relay and causes the integration relay to function. The current flows from TERMINAL 4 of the integration relay to TERMINAL 2 to the door lock motors to TERMINAL 3 of the integration relay to TERMINAL 1 to GROUND and the door lock motors locks the door.

**2. Manual Unlock Operation**

When the door lock control SW or driver's side door key lock and unlock SW are operated to UNLOCK position, an unlock signal is input to TERMINAL 16 of the integration relay and causes the integration relay to function. The current flows from TERMINAL 4 of the integration relay to TERMINAL 3 to the door lock motors to TERMINAL 2 of the integration relay to TERMINAL 1 to GROUND and the door lock motors unlocks the door.

**3. Ignition Key Reminder Operation**

The doors can not be locked unless the key is removed from the ignition key cylinder.

**: Parts Location**

| Code | See Page | Code | See Page | Code | See Page |
|---|---|---|---|---|---|
| B11 | 52 (*4) | I7 | 56 (RHD) | T6 | 58 (RHD) |
| | 53 (*5) | I12 A | 56 (RHD) | T9 | 58 (RHD) |
| B22 | 58 (RHD) | I13 B | 56 (RHD) | X2 | 59 (RHD) |
| B26 | 58 (RHD) | K1 | 58 (RHD) | Y3 | 59 (RHD) |
| H7 A | 57 (RHD) | K5 | 58 (RHD) | a1 | 59 (RHD) |
| H26 | 57 (RHD) | L1 | 58 (RHD) | a2 | 59 (RHD) |
| H27 | 57 (RHD) | M1 | 58 (RHD) | a3 | 59 (RHD) |
| H41 | 57 (RHD) | N1 | 58 (RHD) | | |

**: Relay Blocks**

| Code | See Page | Relay Blocks (Relay Block Location) |
|---|---|---|
| 2 | 28 | Engine Room R/B No.2 (Inside of Battery Room) |

**: Junction Block and Wire Harness Connector**

| Code | See Page | Junction Block and Wire Harness (Connector Location) |
|---|---|---|
| 5A | 30 | Roof Wire and Instrument Panel J/B (Left Side of Instrument Panel) |
| 5B | 30 | Cowl to Head Lamp Wire and Instrument Panel J/B (Left Side of Instrument Panel) |
| 5E | 30 | Engine Room Main Wire and Instrument Panel J/B (Left Side of Instrument Panel) |
| 5H | 30 | Instrument Panel Wire and Instrument Panel J/B (Left Side of Instrument Panel) |
| 5M | 31 | |
| 6C | 38 (RHD) | Instrument Panel Wire and Center J/B (Instrument Panel Reinforcement RH) |
| 6F | | |

* 1 : LHD 2TR–FE * 2 : LHD 2KD–FTV * 3 : LHD 5L–E * 4 : RHD 2TR–FE * 5 : RHD 2KD–FTV * 6 : RHD 5L–E * 7 : 2TR–FE
* 8 : 2KD–FTV, 5L–E

**: Connector Joining Wire Harness and Wire Harness**

| Code | See Page | Joining Wire Harness and Wire Harness (Connector Location) |
|---|---|---|
| HA1 | 72 (RHD) | Instrument Panel Wire and Cowl to Head Lamp Wire (Under the Instrument Panel J/B) |
| HB2 | 72 (RHD) | Instrument Panel Wire and Engine Room Main Wire (Under the Instrument Panel J/B) |
| HH1 | 72 (RHD) | Instrument Panel Wire and Instrument Panel Wire (Instrument Panel Reinforcement RH) |
| IH4 | 72 (RHD) | Instrument Panel No.2 Wire and Instrument Panel Wire (Instrument Panel Reinforcement RH) |
| KA1 | 73 (RHD) | Front Door RH Wire and Cowl to Head Lamp Wire (Right Kick Panel) |
| KA2 | | |
| KA3 | | |
| LA2 | 73 (RHD) | Front Door LH Wire and Cowl to Head Lamp Wire (Left Kick Panel) |
| LA3 | | |
| MB1 | 68 (*4) | Pillar No.1 Wire and Engine Room Main Wire (RH Side Battery Room) |
| | 69 (*5) | |
| | 70 (*6) | |
| NB1 | 68 (*4) | Pillar No.2 Wire and Engine Room Main Wire (LH Side Battery Room) |
| | 69 (*5) | |
| | 70 (*6) | |
| TU1 | 74 (RHD) | Roof Wire and Roof No.2 Wire (Rear of the Left Side of the Roof Panel) |
| TU2 | | |
| TY1 | 74 (RHD) | Roof Wire and Luggage Room No.3 Wire (Left Quarter Panel) |
| UX1 | 74 (RHD) | Roof No.2 Wire and Luggage Room No.2 Wire (Right Quarter Panel) |
| ZU1 | 74 (RHD) | Back Door No.1 Wire and Roof No.2 Wire (Rear of the Right Side of the Roof Panel) |
| Za1 | 74 (RHD) | Back Door No.1 Wire and Back Door No.2 Wire (Right Side of Back Door) |

**: Ground Points**

| Code | See Page | Ground Points Location |
|---|---|---|
| A1 | 72 (RHD) | Dash Panel Right |
| B2 | 68 (*4) | Front Floor Panel Right |
| | 69 (*5) | |
| | 70 (*6) | |
| B3 | 68 (*4) | Front Floor Panel Left |
| | 69 (*5) | |
| | 70 (*6) | |
| H1 | 72 (RHD) | Instrument Panel Reinforcement |
| H2 | | |
| a1 | 74 (RHD) | Back Door Right |

* 1 : LHD 2TR–FE * 2 : LHD 2KD–FTV * 3 : LHD 5L–E * 4 : RHD 2TR–FE * 5 : RHD 2KD–FTV * 6 : RHD 5L–E * 7 : 2TR–FE
* 8 : 2KD–FTV, 5L–E

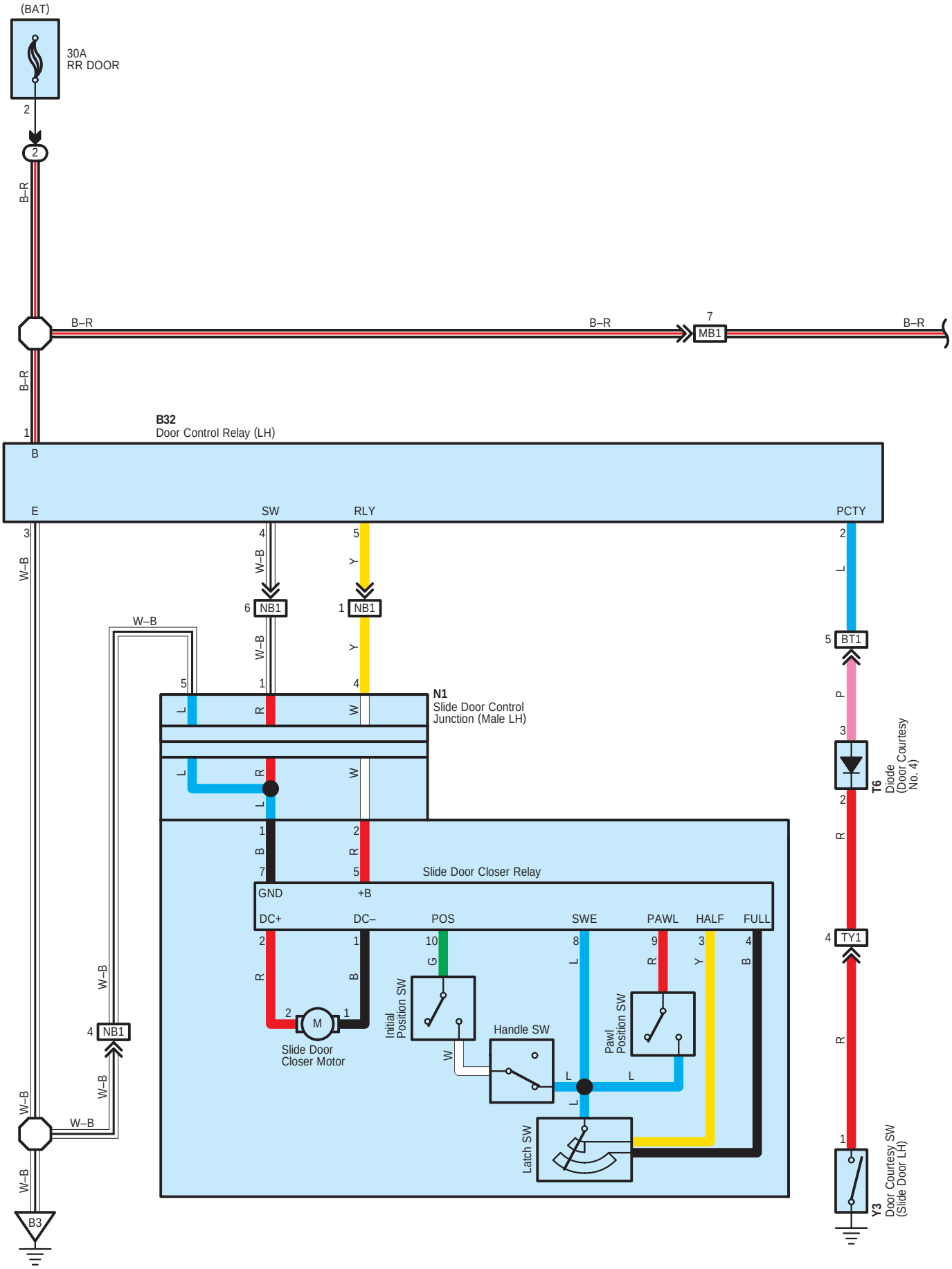
(BAT)
30A
RR DOOR
2
B–R
B–R
B–R
7
MB1
B–R
1
B
B32
Door Control Relay (LH)
E
SW
RLY
PCTY
3
W–B
4
W–B
6
NB1
5
Y
1
NB1
2
L
5
BT1
P
3
T6
Diode
(Door Courtesy
No. 4)
2
R
4
TY1
R
1
Y3
Door Courtesy SW
(Slide Door LH)
W–B
5
L
R
W
1
B
7
2
R
5
N1
Slide Door Control
Junction (Male LH)
Slide Door Closer Relay
GND
+B
DC+
DC–
POS
SWE
PAWL
HALF
FULL
2
R
1
B
10
G
8
L
9
R
3
Y
4
B
2
M
1
Slide Door
Closer Motor
Initial
Position SW
W
Handle SW
L
L
L
Pawl
Position SW
Latch SW
W–B
4
NB1
W–B
W–B
W–B
B3

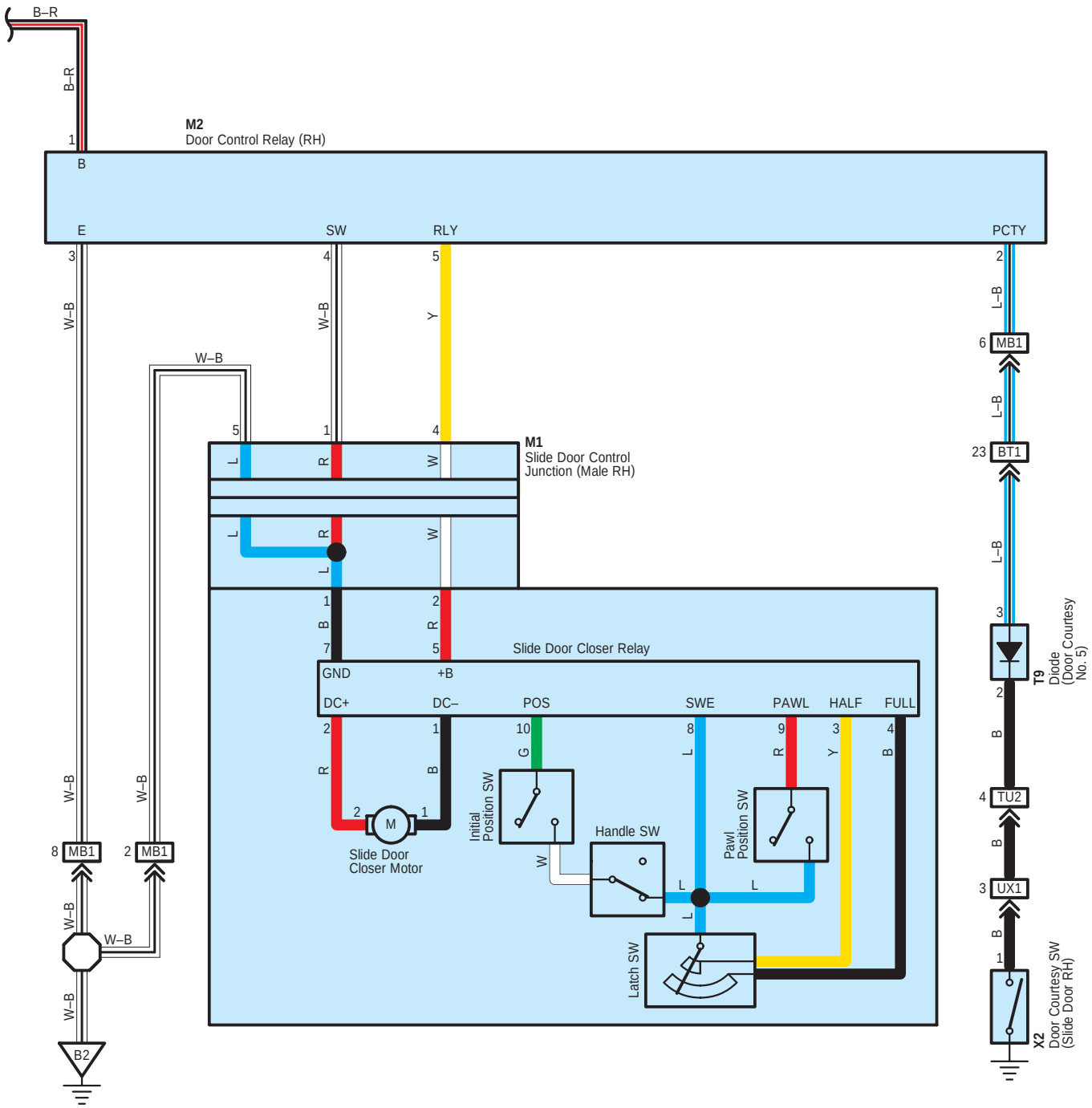
B–R
B–R
1
M2
Door Control Relay (RH)
B
E
SW
RLY
PCTY
3
4
5
2
W–B
W–B
Y
L–B
6
MB1
L–B
23
BT1
L–B
M1
Slide Door Control
Junction (Male RH)
L
R
W
1
B
7
2
R
5
Slide Door Closer Relay
GND
+B
DC+
DC–
POS
SWE
PAWL
HALF
FULL
10
G
8
L
9
R
3
Y
4
B
Initial
Position SW
Handle SW
Pawl
Position SW
Slide Door
Closer Motor
M
W
Latch SW
T9
Diode
(Door Courtesy
No. 5)
TU2
UX1
X2
Door Courtesy SW
(Slide Door RH)
8
MB1
2
MB1
W–B
W–B
W–B
W–B
B2

# Door Closer

**: Parts Location**

| Code | See Page | Code | See Page | Code | See Page |
|---|---|---|---|---|---|
| B32 | 58 (RHD) | N1 | 58 (RHD) | X2 | 59 (RHD) |
| M1 | 58 (RHD) | T6 | 58 (RHD) | Y3 | 59 (RHD) |
| M2 | 58 (RHD) | T9 | 58 (RHD) | | |

**: Relay Blocks**

| Code | See Page | Relay Blocks (Relay Block Location) |
|---|---|---|
| 2 | 28 | Engine Room R/B No.2 (Inside of Battery Room) |

**: Connector Joining Wire Harness and Wire Harness**

| Code | See Page | Joining Wire Harness and Wire Harness (Connector Location) |
|---|---|---|
| BT1 | 72 (RHD) | Engine Room Main Wire and Roof Wire (Cowl Side Panel LH) |
| MB1 | 68 (*4) | Pillar No.1 Wire and Engine Room Main Wire (RH Side Battery Room) |
| NB1 | 68 (*4) | Pillar No.2 Wire and Engine Room Main Wire (LH Side Battery Room) |
| TU2 | 74 (RHD) | Roof Wire and Roof No.2 Wire (Rear of the Left Side of the Roof Panel) |
| TY1 | 74 (RHD) | Roof Wire and Luggage Room No.3 Wire (Left Quarter Panel) |
| UX1 | 74 (RHD) | Roof No.2 Wire and Luggage Room No.2 Wire (Right Quarter Panel) |

**: Ground Points**

| Code | See Page | Ground Points Location |
|---|---|---|
| B2 | 68 (*4) | Front Floor Panel Right |
| B3 | 68 (*4) | Front Floor Panel Left |

* 1 : LHD 2TR–FE * 2 : LHD 2KD–FTV * 3 : LHD 5L–E * 4 : RHD 2TR–FE * 5 : RHD 2KD–FTV * 6 : RHD 5L–E * 7 : 2TR–FE
* 8 : 2KD–FTV, 5L–E

# Wireless Door Lock Control (LHD)

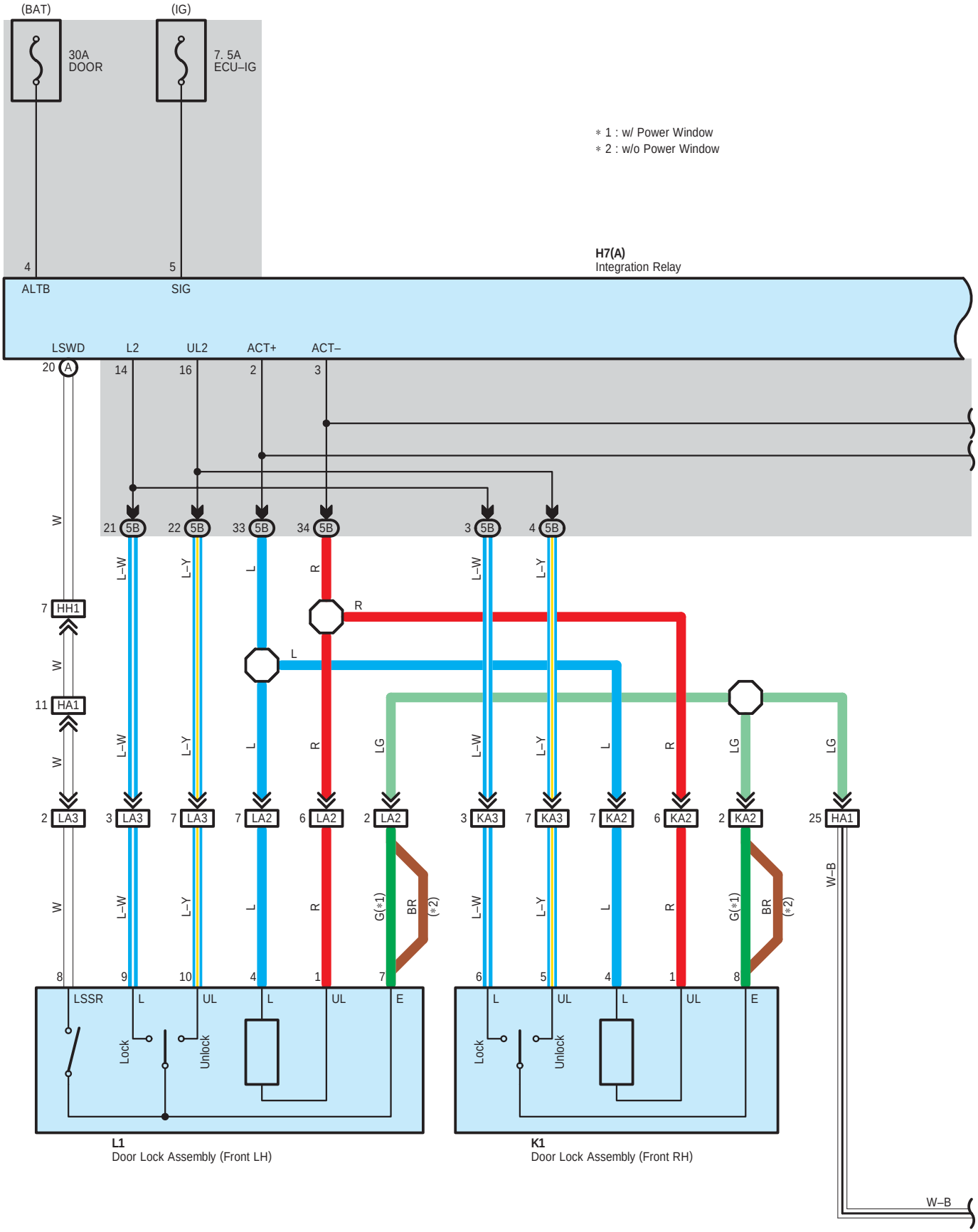

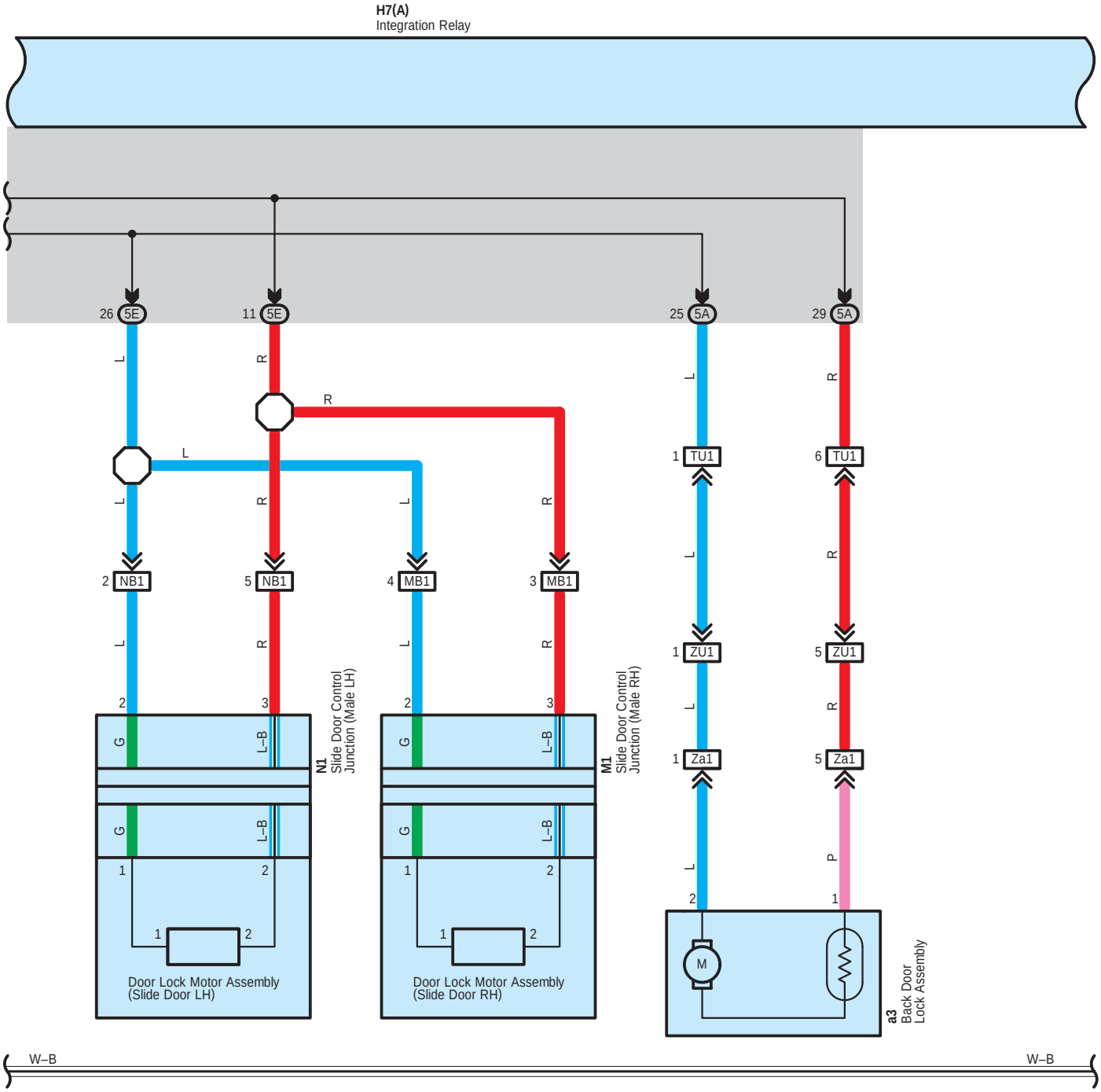
H7(A)
Integration Relay
26 5E
11 5E
25 5A
29 5A
L
R
2 NB1
5 NB1
4 MB1
3 MB1
1 TU1
6 TU1
1 ZU1
5 ZU1
1 Za1
5 Za1
P
N1
Slide Door Control Junction (Male LH)
M1
Slide Door Control Junction (Male RH)
G
L–B
Door Lock Motor Assembly (Slide Door LH)
Door Lock Motor Assembly (Slide Door RH)
M
a3
Back Door Lock Assembly
W–B
W–B

∗ 3 : 6 Speaker
∗ 4 : Except ∗3

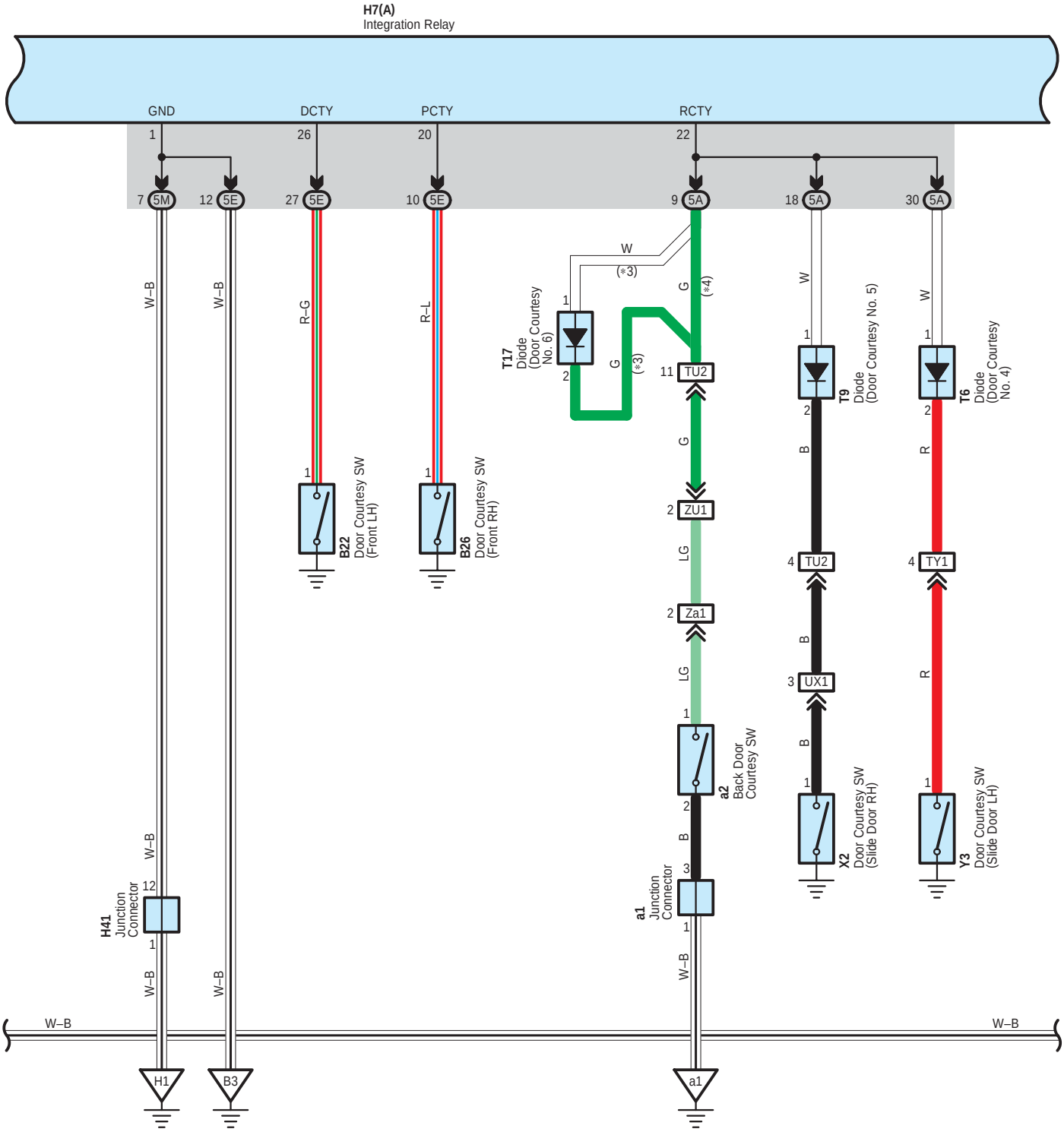

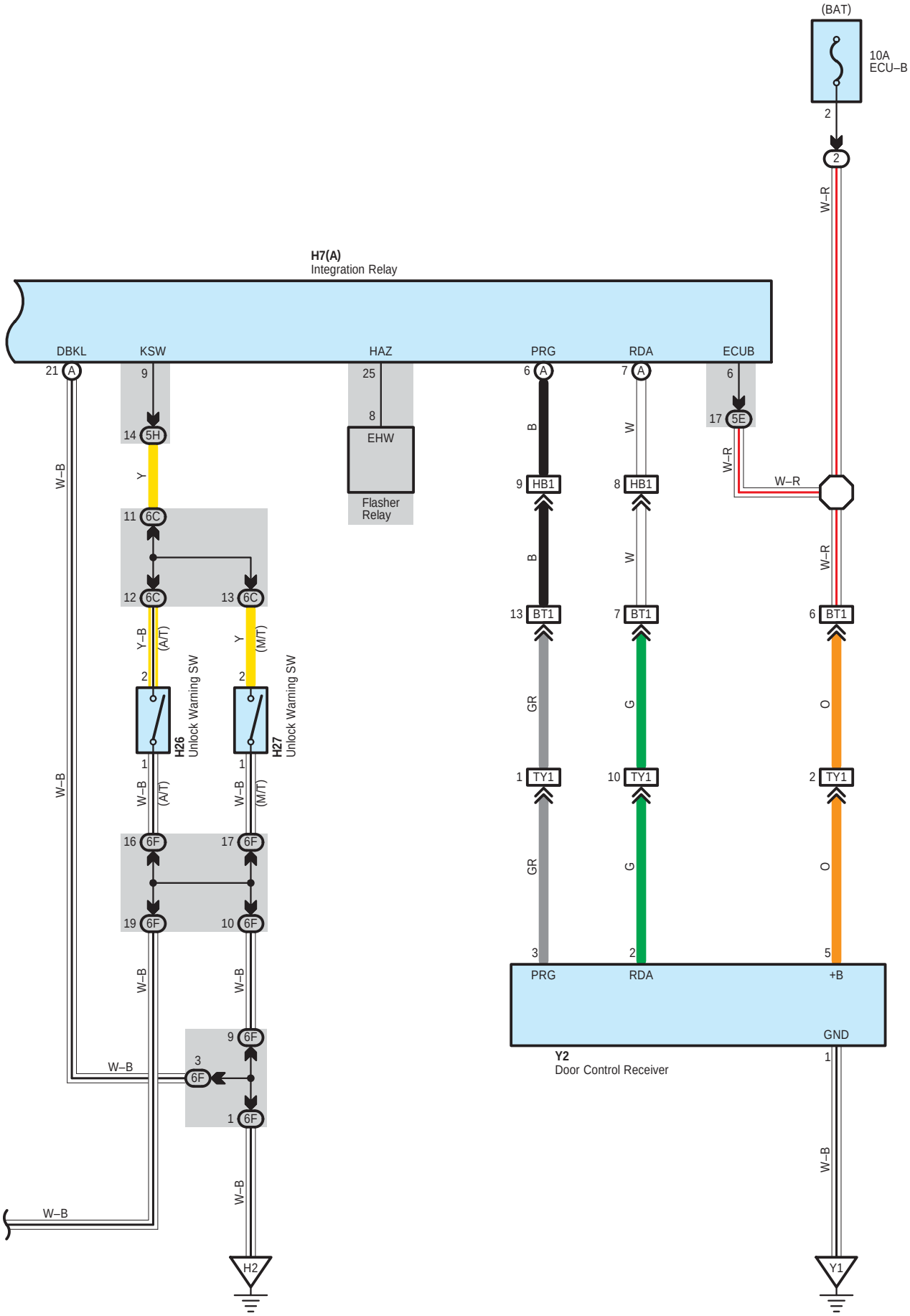
(BAT)
10A
ECU–B
2
2
W–R
H7(A)
Integration Relay
DBKL
KSW
HAZ
PRG
RDA
ECUB
21 A
9
14 5H
25
8
EHW
Flasher
Relay
6 A
7 A
6
17 5E
W–B
Y
B
W
W–R
W–R
11 6C
12 6C
13 6C
9 HB1
8 HB1
B
W
W–R
13 BT1
7 BT1
6 BT1
Y–B
(A/T)
Y
(M/T)
2
2
H26
Unlock Warning SW
H27
Unlock Warning SW
GR
G
O
1
1
1 TY1
10 TY1
2 TY1
W–B
(A/T)
W–B
(M/T)
GR
G
O
16 6F
17 6F
19 6F
10 6F
3
2
5
PRG
RDA
+B
GND
W–B
W–B
W–B
9 6F
3 6F
1 6F
Y2
Door Control Receiver
1
W–B
W–B
W–B
H2
Y1

# Wireless Door Lock Control (LHD)

**System Outline**

Door lock control (Lock and unlock) is performed by remote control, without the ignition key inserted in the door key cylinder, using low–power electrical waves emitted by a transmitter.

**1. Normal Operation**

* Lock operation
  When the lock button on the transmitter is pressed, all the doors are locked.
* Unlock operation
  When the unlock button on the transmitter is pressed, all the doors are unlocked.

**2. Visual Confirmation of Lock or Unlock**

If all doors indicate that they are locked after the lock command, hazard lights will flash once. If any door indicates that it is open after the unlock command, hazard lights will flash twice.

**3. Automatic Lock Operation**

All the doors are automatically relocked unless any door is opened within 30 seconds after pushing the button (Transmitter) to unlock all the doors under conditions that the ignition key is not inserted into the ignition key cylinder (Unlock warning SW off), ignition SW is at OFF and all the doors are completely closed.

**: Parts Location**

| Code | See Page | Code | See Page | Code | See Page |
|---|---|---|---|---|---|
| B22 | 50 (LHD) | L1 | 50 (LHD) | Y2 | 51 (LHD) |
| B26 | 50 (LHD) | M1 | 50 (LHD) | Y3 | 51 (LHD) |
| H7 A | 49 (LHD) | N1 | 50 (LHD) | a1 | 51 (LHD) |
| H26 | 49 (LHD) | T6 | 50 (LHD) | a2 | 51 (LHD) |
| H27 | 49 (LHD | T9 | 50 (LHD) | a3 | 51 (LHD) |
| H41 | 49 (LHD) | T17 | 50 (LHD) | | |
| K1 | 50 (LHD) | X2 | 51 (LHD) | | |

**: Relay Blocks**

| Code | See Page | Relay Blocks (Relay Block Location) |
|---|---|---|
| 2 | 28 | Engine Room R/B No.2 (Inside of Battery Room) |

**: Junction Block and Wire Harness Connector**

| Code | See Page | Junction Block and Wire Harness (Connector Location) |
|---|---|---|
| 5A | 30 | Roof Wire and Instrument Panel J/B (Left Side of Instrument Panel) |
| 5B | 30 | Cowl to Head Lamp Wire and Instrument Panel J/B (Left Side of Instrument Panel) |
| 5E | 30 | Engine Room Main Wire and Instrument Panel J/B (Left Side of Instrument Panel) |
| 5H | 30 | Instrument Panel Wire and Instrument Panel J/B (Left Side of Instrument Panel) |
| 5M | 31 | |
| 6C | 38 (LHD) | Instrument Panel Wire and Center J/B (Instrument Panel Reinforcement LH) |
| 6F | | |

**: Connector Joining Wire Harness and Wire Harness**

| Code | See Page | Joining Wire Harness and Wire Harness (Connector Location) |
|---|---|---|
| BT1 | 64 (LHD) | Engine Room Main Wire and Roof Wire (Cowl Side Panel LH) |
| HA1 | 64 (LHD) | Instrument Panel Wire and Cowl to Head Lamp Wire (Under the Instrument Panel J/B) |
| HB1 | 64 (LHD) | Instrument Panel Wire and Engine Room Main Wire (Under the Instrument Panel J/B) |
| HH1 | 64 (LHD) | Instrument Panel Wire and Instrument Panel Wire (Near the Steering Column) |
| KA2 | 65 (LHD) | Front Door RH Wire and Cowl to Head Lamp Wire (Right Kick Panel) |
| KA3 | | |
| LA2 | 65 (LHD) | Front Door LH Wire and Cowl to Head Lamp Wire (Left Kick Panel) |
| LA3 | | |
| MB1 | 60 (*1) | Pillar No.1 Wire and Engine Room Main Wire (RH Side Battery Room) |
| | 61 (*2) | |
| NB1 | 60 (*1) | Pillar No.2 Wire and Engine Room Main Wire (LH Side Battery Room) |
| | 61 (*2) | |
| TU1 | 66 (LHD) | Roof Wire and Roof No.2 Wire (Rear of the Left Side of the Roof Panel) |
| TU2 | | |
| TY1 | 66 (LHD) | Roof Wire and Luggage Room No.3 Wire (Left Quarter Panel) |
| UX1 | 66 (LHD) | Roof No.2 Wire and Luggage Room No.2 Wire (Right Quarter Panel) |
| ZU1 | 66 (LHD) | Back Door No.1 Wire and Roof No.2 Wire (Rear of the Right Side of the Roof Panel) |
| Za1 | 66 (LHD) | Back Door No.1 Wire and Back Door No.2 Wire (Right Side of Back Door) |

**: Ground Points**

| Code | See Page | Ground Points Location |
|---|---|---|
| B3 | 60 (*1) | Front Floor Panel Left |
| | 61 (*2) | |
| H1 | 64 (LHD) | Instrument Panel Reinforcement |
| H2 | | |
| Y1 | 66 (LHD) | Left Quarter Panel |
| a1 | 66 (LHD) | Back Door Right |

* 1 : LHD 2TR–FE * 2 : LHD 2KD–FTV * 3 : LHD 5L–E * 4 : RHD 2TR–FE * 5 : RHD 2KD–FTV * 6 : RHD 5L–E * 7 : 2TR–FE
* 8 : 2KD–FTV, 5L–E

# Wireless Door Lock Control (RHD)

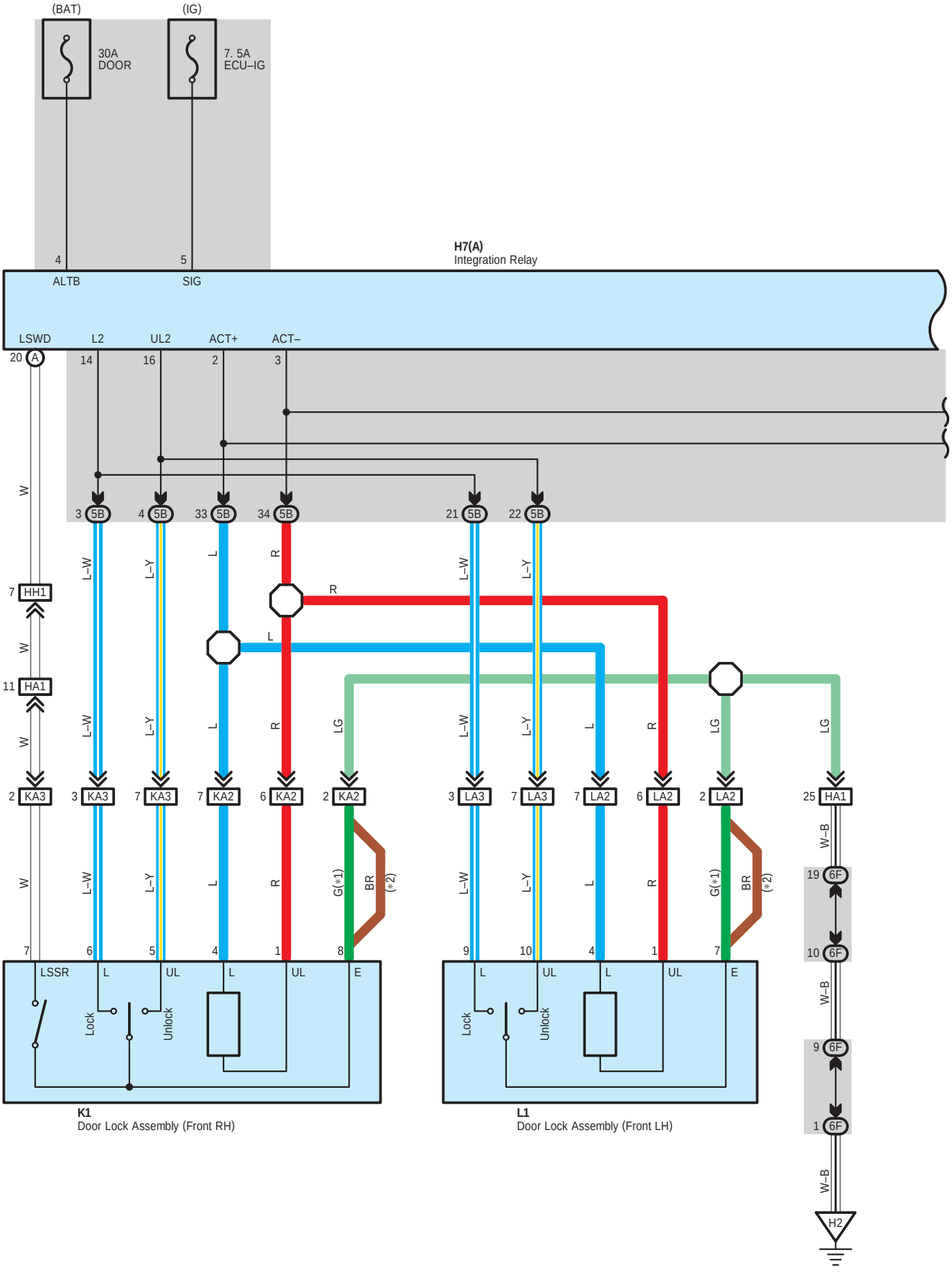

＊1 : w/ Power Window
＊2 : w/o Power Window

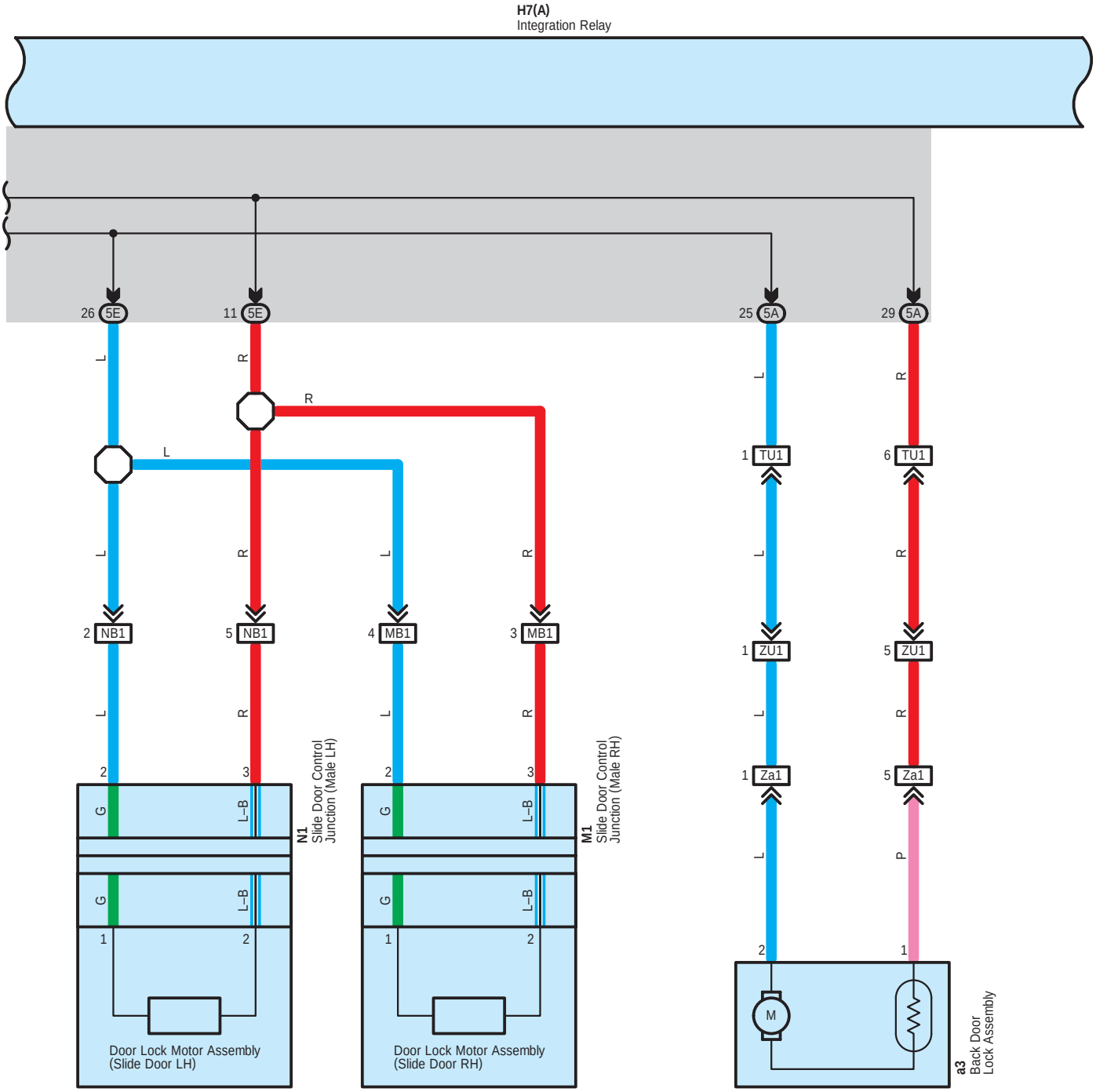

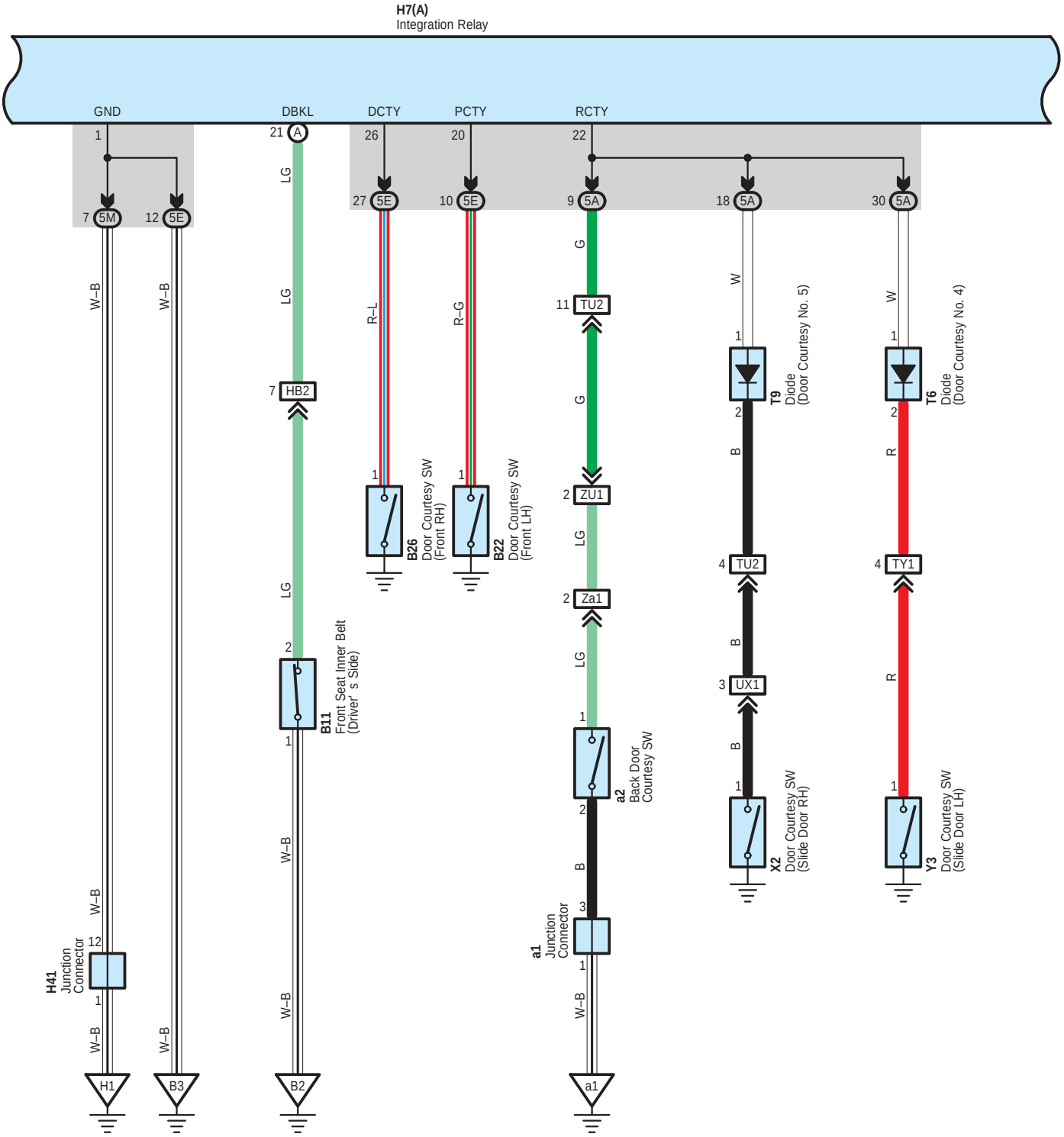
H7(A)
Integration Relay
GND
DBKL
DCTY
PCTY
RCTY
1
21 A
26
20
22
27 5E
10 5E
9 5A
18 5A
30 5A
7 5M
12 5E
LG
R–L
R–G
G
W
11 TU2
7 HB2
1
2 ZU1
2 Za1
4 TU2
4 TY1
3 UX1
B
R
W–B
12
3
B11
Front Seat Inner Belt
(Driver' s Side)
B26
Door Courtesy SW
(Front RH)
B22
Door Courtesy SW
(Front LH)
a2
Back Door
Courtesy SW
a1
Junction
Connector
H41
Junction
Connector
T9
Diode
(Door Courtesy No. 5)
T6
Diode
(Door Courtesy No. 4)
X2
Door Courtesy SW
(Slide Door RH)
Y3
Door Courtesy SW
(Slide Door LH)
H1
B3
B2
a1

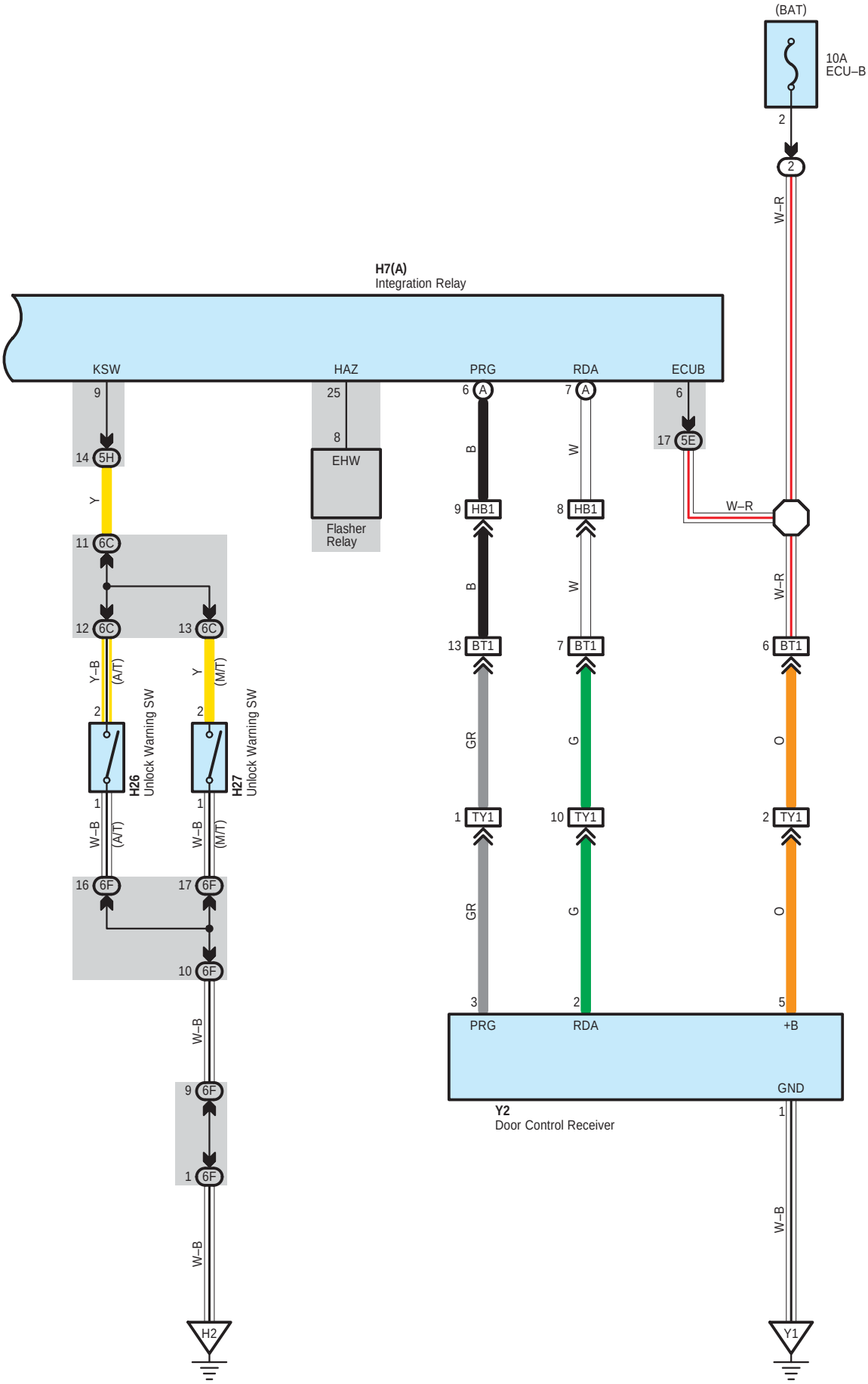
(BAT)
10A
ECU–B
2
2
W–R
H7(A)
Integration Relay
KSW
HAZ
PRG
RDA
ECUB
9
14 5H
Y
11 6C
12 6C
13 6C
25
8
EHW
Flasher
Relay
6 A
B
9 HB1
B
13 BT1
GR
1 TY1
GR
3
PRG
7 A
W
8 HB1
W
7 BT1
G
10 TY1
G
2
RDA
6
17 5E
W–R
W–R
6 BT1
O
2 TY1
O
5
+B
GND
1
W–B
Y2
Door Control Receiver
Y–B (A/T)
2
H26
Unlock Warning SW
1
W–B (A/T)
16 6F
Y (M/T)
2
H27
Unlock Warning SW
1
W–B (M/T)
17 6F
10 6F
W–B
9 6F
1 6F
W–B
H2
Y1

# Wireless Door Lock Control (RHD)

**System Outline**

Door lock control (Lock and unlock) is performed by remote control, without the ignition key inserted in the door key cylinder, using low–power electrical waves emitted by a transmitter.

**1. Normal Operation**

* Lock operation
  When the lock button on the transmitter is pressed, all the doors are locked.
* Unlock operation
  When the unlock button on the transmitter is pressed, all the doors are unlocked.

**2. Visual Confirmation of Lock or Unlock**

If all doors indicate that they are locked after the lock command, hazard lights will flash once. If any door indicates that it is open after the unlock command, hazard lights will flash twice.

**3. Automatic Lock Operation**

All the doors are automatically relocked unless any door is opened within 30 seconds after pushing the button (Transmitter) to unlock all the doors under conditions that the ignition key is not inserted into the ignition key cylinder (Unlock warning SW off), ignition SW is at OFF and all the doors are completely closed.

**: Parts Location**

| Code | See Page | Code | See Page | Code | See Page |
|---|---|---|---|---|---|
| B11 | 52 (*4) | H41 | 57 (RHD) | X2 | 59 (RHD) |
| | 53 (*5) | K1 | 58 (RHD) | Y2 | 59 (RHD) |
| B22 | 58 (RHD) | L1 | 58 (RHD) | Y3 | 59 (RHD) |
| B26 | 58 (RHD) | M1 | 58 (RHD) | a1 | 59 (RHD) |
| H7 A | 57 (RHD) | N1 | 58 (RHD) | a2 | 59 (RHD) |
| H26 | 57 (RHD) | T6 | 58 (RHD) | a3 | 59 (RHD) |
| H27 | 57 (RHD) | T9 | 58 (RHD) | | |

**: Relay Blocks**

| Code | See Page | Relay Blocks (Relay Block Location) |
|---|---|---|
| 2 | 28 | Engine Room R/B No.2 (Inside of Battery Room) |

**: Junction Block and Wire Harness Connector**

| Code | See Page | Junction Block and Wire Harness (Connector Location) |
|---|---|---|
| 5A | 30 | Roof Wire and Instrument Panel J/B (Left Side of Instrument Panel) |
| 5B | 30 | Cowl to Head Lamp Wire and Instrument Panel J/B (Left Side of Instrument Panel) |
| 5E | 30 | Engine Room Main Wire and Instrument Panel J/B (Left Side of Instrument Panel) |
| 5H | 30 | Instrument Panel Wire and Instrument Panel J/B (Left Side of Instrument Panel) |
| 5M | 31 | |
| 6C | 38 (RHD) | Instrument Panel Wire and Center J/B (Instrument Panel Reinforcement RH) |
| 6F | | |

* 1 : LHD 2TR–FE * 2 : LHD 2KD–FTV * 3 : LHD 5L–E * 4 : RHD 2TR–FE * 5 : RHD 2KD–FTV * 6 : RHD 5L–E * 7 : 2TR–FE
* 8 : 2KD–FTV, 5L–E

**: Connector Joining Wire Harness and Wire Harness**

| Code | See Page | Joining Wire Harness and Wire Harness (Connector Location) |
|---|---|---|
| BT1 | 72 (RHD) | Engine Room Main Wire and Roof Wire (Cowl Side Panel LH) |
| HA1 | 72 (RHD) | Instrument Panel Wire and Cowl to Head Lamp Wire (Under the Instrument Panel J/B) |
| HB1 | 72 (RHD) | Instrument Panel Wire and Engine Room Main Wire (Under the Instrument Panel J/B) |
| HB2 | | |
| HH1 | 72 (RHD) | Instrument Panel Wire and Instrument Panel Wire (Instrument Panel Reinforcement RH) |
| KA2 | 73 (RHD) | Front Door RH Wire and Cowl to Head Lamp Wire (Right Kick Panel) |
| KA3 | | |
| LA2 | 73 (RHD) | Front Door LH Wire and Cowl to Head Lamp Wire (Left Kick Panel) |
| LA3 | | |
| MB1 | 68 (*4) | Pillar No.1 Wire and Engine Room Main Wire (RH Side Battery Room) |
| | 69 (*5) | |
| NB1 | 68 (*4) | Pillar No.2 Wire and Engine Room Main Wire (LH Side Battery Room) |
| | 69 (*5) | |
| TU1 | 74 (RHD) | Roof Wire and Roof No.2 Wire (Rear of the Left Side of the Roof Panel) |
| TU2 | | |
| TY1 | 74 (RHD) | Roof Wire and Luggage Room No.3 Wire (Left Quarter Panel) |
| UX1 | 74 (RHD) | Roof No.2 Wire and Luggage Room No.2 Wire (Right Quarter Panel) |
| ZU1 | 74 (RHD) | Back Door No.1 Wire and Roof No.2 Wire (Rear of the Right Side of the Roof Panel) |
| Za1 | 74 (RHD) | Back Door No.1 Wire and Back Door No.2 Wire (Right Side of Back Door) |

**: Ground Points**

| Code | See Page | Ground Points Location |
|---|---|---|
| B2 | 68 (*4) | Front Floor Panel Right |
| | 69 (*5) | |
| B3 | 68 (*4) | Front Floor Panel Left |
| | 69 (*5) | |
| H1 | 72 (RHD) | Instrument Panel Reinforcement |
| H2 | | |
| Y1 | 74 (RHD) | Left Quarter Panel |
| a1 | 74 (RHD) | Back Door Right |

* 1 : LHD 2TR–FE * 2 : LHD 2KD–FTV * 3 : LHD 5L–E * 4 : RHD 2TR–FE * 5 : RHD 2KD–FTV * 6 : RHD 5L–E * 7 : 2TR–FE
* 8 : 2KD–FTV, 5L–E

# ECT and A/T Indicator (2TR–FE)

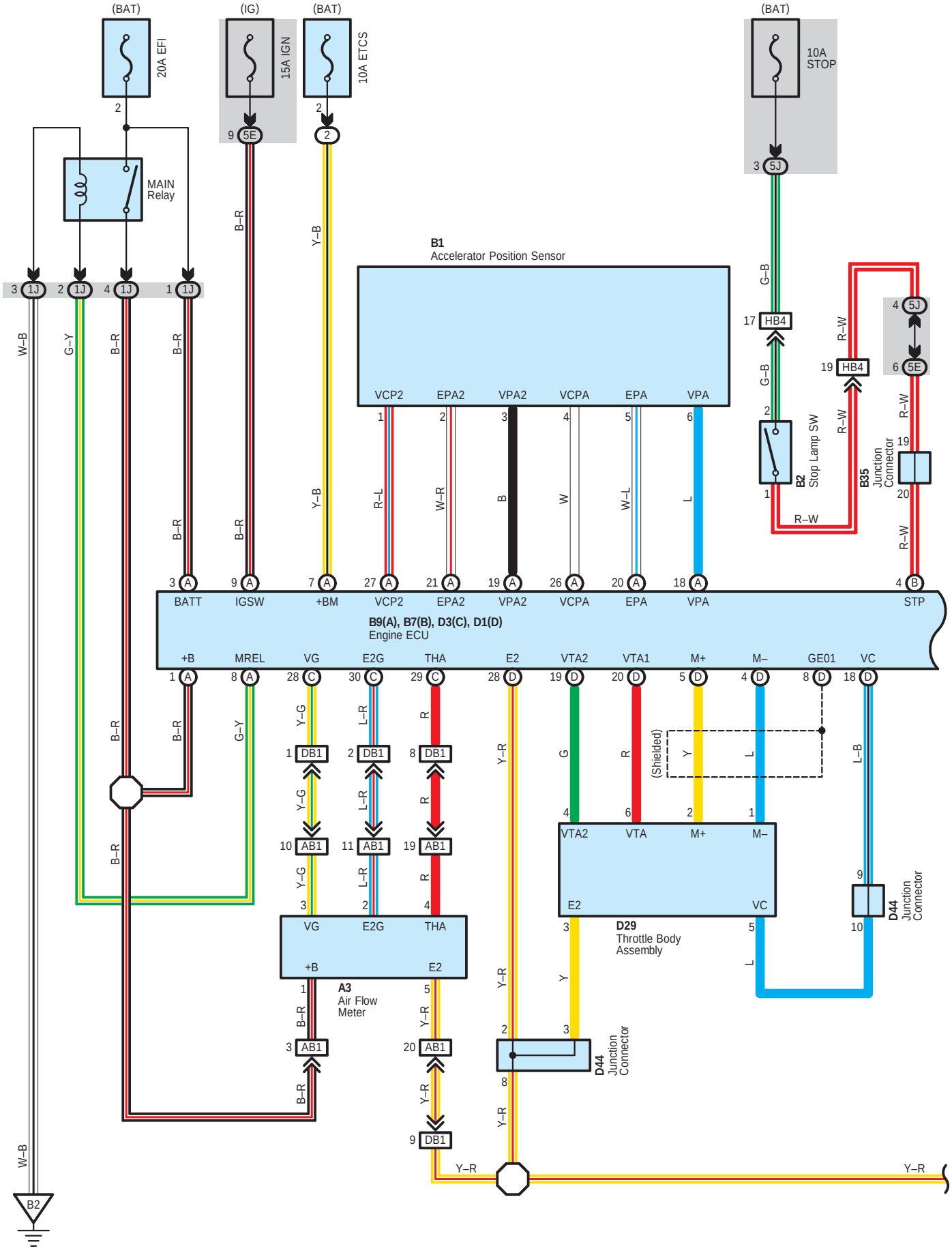

＊1 : Australia, Chile, China, Ecuador, Hong Kong, New Zealand, Thailand

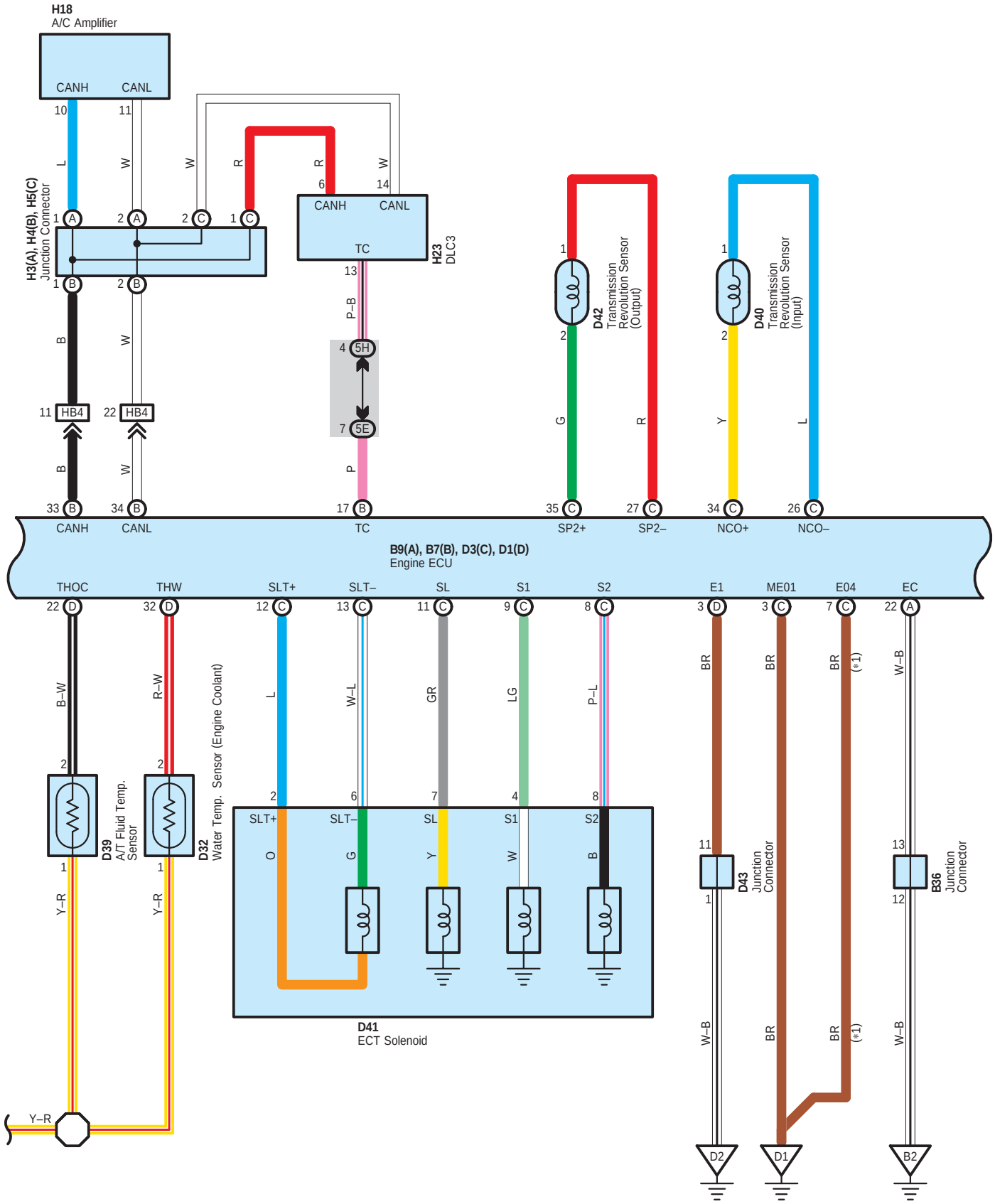

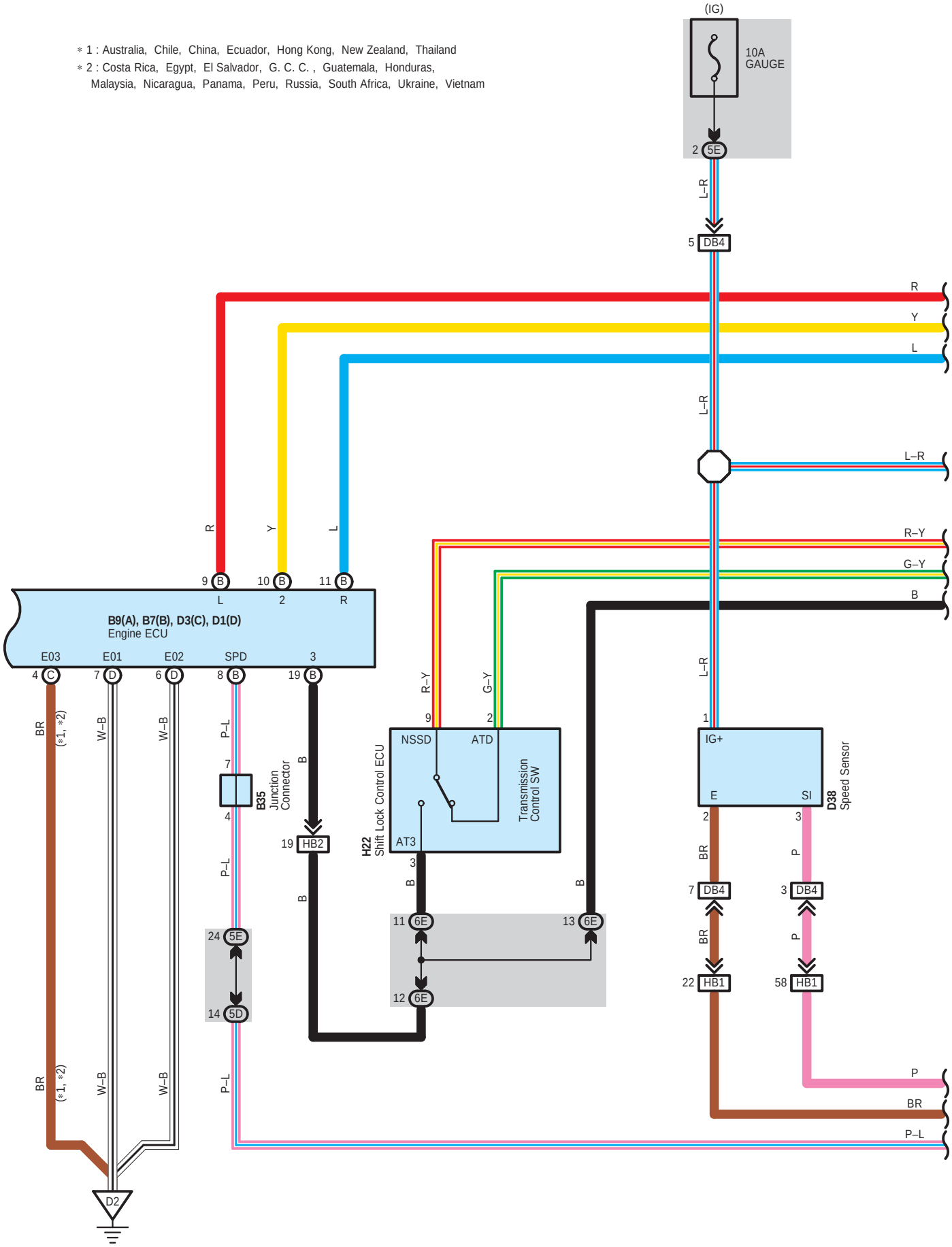
∗ 1 : Australia, Chile, China, Ecuador, Hong Kong, New Zealand, Thailand
∗ 2 : Costa Rica, Egypt, El Salvador, G. C. C. , Guatemala, Honduras, Malaysia, Nicaragua, Panama, Peru, Russia, South Africa, Ukraine, Vietnam
(IG)
10A GAUGE
2 5E
L–R
5 DB4
R
Y
L
L–R
L–R
R
Y
L
9 B
10 B
11 B
L
2
R
B9(A), B7(B), D3(C), D1(D)
Engine ECU
E03
E01
E02
SPD
3
4 C
7 D
6 D
8 B
19 B
R–Y
G–Y
B
L–R
BR
(∗1, ∗2)
W–B
W–B
P–L
7
4
B35
Junction Connector
B
19 HB2
B
9
2
NSSD
ATD
AT3
H22
Shift Lock Control ECU
Transmission Control SW
3
B
B
1
IG+
E
SI
D38
Speed Sensor
2
3
BR
P
7 DB4
3 DB4
BR
P
22 HB1
58 HB1
24 5E
14 5D
11 6E
13 6E
12 6E
P–L
BR
(∗1, ∗2)
W–B
W–B
P
BR
P–L
D2

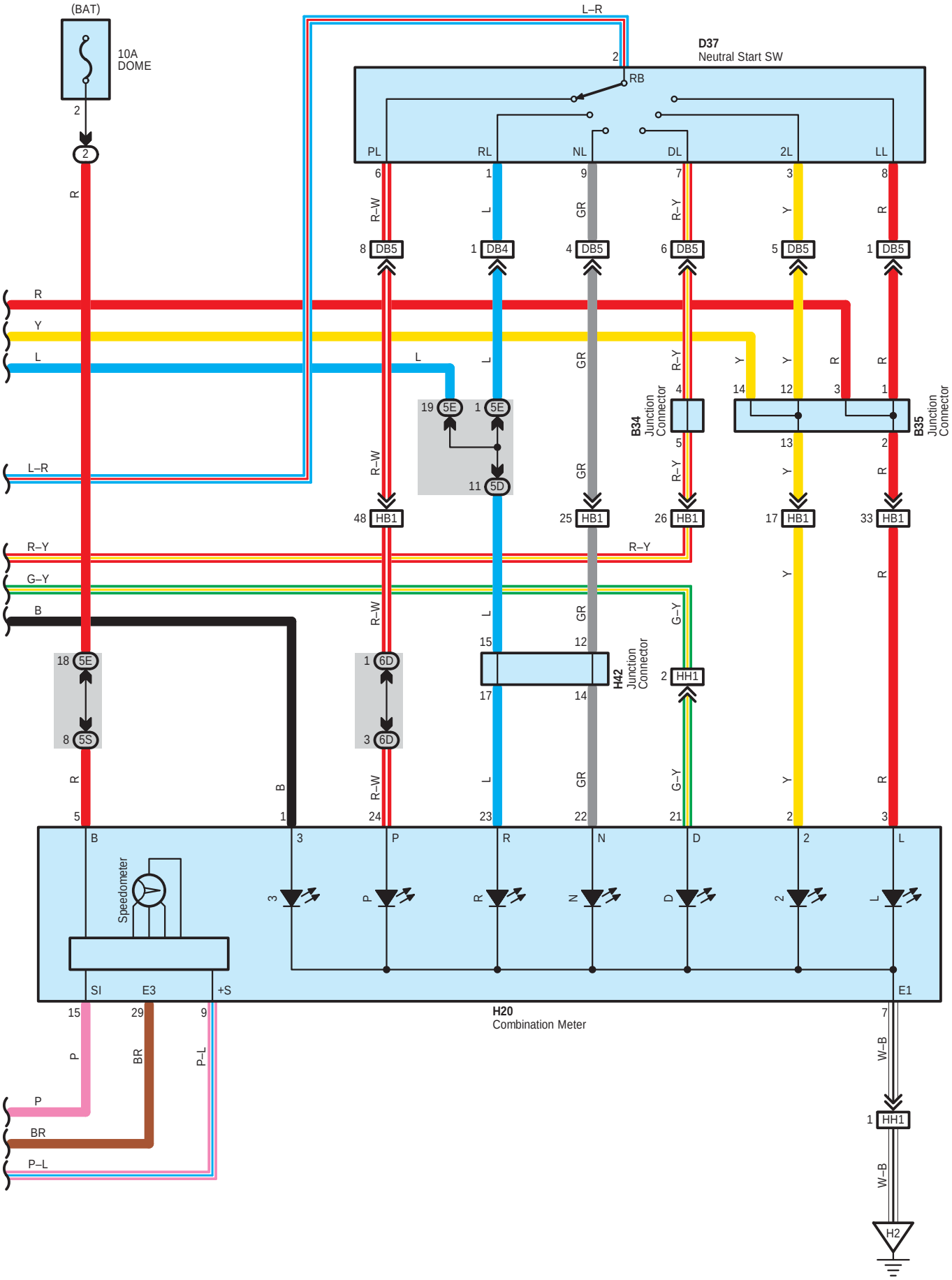
(BAT)
10A
DOME
L–R
D37
Neutral Start SW
RB
PL
RL
NL
DL
2L
LL
R–W
L
GR
R–Y
Y
R
DB5
DB4
B34
Junction
Connector
B35
Junction
Connector
5E
5D
HB1
G–Y
B
6D
5S
H42
Junction
Connector
HH1
Speedometer
SI
E3
+S
E1
H20
Combination Meter
W–B
P
BR
P–L
H2

# ECT and A/T Indicator (2TR–FE)

**System Outline**

Previous automatic transmissions have selected each gear shift using mechanically controlled throttle hydraulic pressure, governor hydraulic pressure and lock–up hydraulic pressure. The electronically controlled transmission, however, electrically controls the line pressure, throttle pressure, lock–up pressure and accumulator pressure etc. through the solenoid valve. The electronically controlled transmission is a system which precisely controls gear shift timing and lock–up timing in response to the vehicle's driving conditions and the engine condition detected by various sensors. It makes smooth driving possible by shift selection for each gear which is the most appropriate to the driving conditions at that time, and by preventing downing, squat and gear shift shock when starting off.

**1. Gear Shift Operation**

When driving, the engine warm up condition is input as a signal to TERMINAL THW of the engine ECU from the water temp. sensor (Engine coolant) and the vehicle speed signal from speed sensor is input to TERMINAL SPD of the engine ECU via combination meter. At the same time, the throttle valve opening signal from the throttle body assembly is input to TERMINALS VTA1 and VTA2 of the engine ECU as throttle angle signal.
Based on these signals, the engine ECU selects the best shift position for the driving conditions and sends current to the ECT solenoid.

**2. Lock–Up Operation**

When the engine ECU decides based on each signal that the lock–up condition has been met, the current flows through TERMINAL SL of the engine ECU to TERMINAL 7 of the ECT solenoid to GROUND, causing lock–up operation.

**3. Stop Lamp SW Circuit**

If the brake pedal is depressed (Stop lamp SW on) when driving in lock–up condition, a signal is input to TERMINAL STP of the engine ECU. The engine ECU operates and cuts the current to the solenoid to release lock–up.

**○ : Parts Location**

| Code | See Page | Code | See Page | Code | See Page |
|---|---|---|---|---|---|
| A3 | 48 (LHD) | D3 C | 52 (*4) | D44 | 44 (*1) |
| | 56 (RHD) | D29 | 44 (*1) | | 52 (*4) |
| B1 | 48 (LHD) | | 52 (*4) | H3 A | 42, 49 (LHD) |
| | 56 (RHD) | D32 | 44 (*1) | | 42, 57 (RHD) |
| B2 | 48 (LHD) | | 52 (*4) | H4 B | 42, 49 (LHD) |
| | 56 (RHD) | D37 | 44 (*1) | | 42, 57 (RHD) |
| B7 B | 44 (*1) | | 52 (*4) | H5 C | 42, 49 (LHD) |
| | 52 (*4) | D38 | 44 (*1) | | 42, 57 (RHD) |
| B9 A | 44 (*1) | | 52 (*4) | H18 | 49 (LHD) |
| | 52 (*4) | D39 | 44 (*1) | | 57 (RHD) |
| B34 | 48 (LHD) | | 52 (*4) | H20 | 49 (LHD) |
| | 56 (RHD) | D40 | 44 (*1) | | 57 (RHD) |
| B35 | 44 (*1) | | 52 (*4) | H22 | 49 (LHD) |
| | 52 (*4) | D41 | 44 (*1) | | 57 (RHD) |
| B36 | 44 (*1) | | 52 (*4) | H23 | 49 (LHD) |
| | 52 (*4) | D42 | 44 (*1) | | 57 (RHD) |
| D1 D | 44 (*1) | | 52 (*4) | H42 | 49 (LHD) |
| | 52 (*4) | D43 | 44 (*1) | | 57 (RHD) |
| D3 C | 44 (*1) | | 52 (*4) | | |

**⬭ : Relay Blocks**

| Code | See Page | Relay Blocks (Relay Block Location) |
|---|---|---|
| 2 | 28 | Engine Room R/B No.2 (Inside of Battery Room) |

* 1 : LHD 2TR–FE * 2 : LHD 2KD–FTV * 3 : LHD 5L–E * 4 : RHD 2TR–FE * 5 : RHD 2KD–FTV * 6 : RHD 5L–E * 7 : 2TR–FE
* 8 : 2KD–FTV, 5L–E

**: Junction Block and Wire Harness Connector**

| Code | See Page | Junction Block and Wire Harness (Connector Location) |
|---|---|---|
| 1J | 25 | Engine Room Main Wire and Engine Room J/B No.1 (Engine Compartment Front) |
| 5D | 30 | Instrument Panel Wire and Instrument Panel J/B (Left Side of Instrument Panel) |
| 5E | 30 | Engine Room Main Wire and Instrument Panel J/B (Left Side of Instrument Panel) |
| 5H | 30 | Instrument Panel Wire and Instrument Panel J/B (Left Side of Instrument Panel) |
| 5J | | |
| 5S | 31 | |
| 6D | 38 (LHD) | Instrument Panel Wire and Center J/B (Instrument Panel Reinforcement LH) |
| | 38 (RHD) | Instrument Panel Wire and Center J/B (Instrument Panel Reinforcement RH) |
| 6E | 38 (LHD) | Instrument Panel Wire and Center J/B (Instrument Panel Reinforcement LH) |
| | 38 (RHD) | Instrument Panel Wire and Center J/B (Instrument Panel Reinforcement RH) |

**: Connector Joining Wire Harness and Wire Harness**

| Code | See Page | Joining Wire Harness and Wire Harness (Connector Location) |
|---|---|---|
| AB1 | 64 (LHD) | Cowl to Head Lamp Wire and Engine Room Main Wire (Left Side of the Instrument Panel J/B) |
| | 72 (RHD) | |
| DB1 | 60 (*1) | Engine Wire and Engine Room Main Wire (Front Side of Engine Room R/B No.1) |
| | 68 (*4) | |
| DB4 | 60 (*1) | |
| | 68 (*4) | |
| DB5 | 60 (*1) | |
| | 68 (*4) | |
| HB1 | 64 (LHD) | Instrument Panel Wire and Engine Room Main Wire (Under the Instrument Panel J/B) |
| | 72 (RHD) | |
| HB2 | 64 (LHD) | |
| | 72 (RHD) | |
| HB4 | 64 (LHD) | |
| | 72 (RHD) | |
| HH1 | 64 (LHD) | Instrument Panel Wire and Instrument Panel Wire (Near the Steering Column) |
| | 72 (RHD) | Instrument Panel Wire and Instrument Panel Wire (Instrument Panel Reinforcement RH) |

**: Ground Points**

| Code | See Page | Ground Points Location |
|---|---|---|
| B2 | 60 (*1) | Front Floor Panel Right |
| | 68 (*4) | |
| D1 | 60 (*1) | Engine Block |
| | 68 (*4) | |
| D2 | 60 (*1) | |
| | 68 (*4) | |
| H2 | 64 (LHD) | Instrument Panel Reinforcement |
| | 72 (RHD) | |

* 1 : LHD 2TR–FE * 2 : LHD 2KD–FTV * 3 : LHD 5L–E * 4 : RHD 2TR–FE * 5 : RHD 2KD–FTV * 6 : RHD 5L–E * 7 : 2TR–FE
* 8 : 2KD–FTV, 5L–E

# ECT and A/T Indicator (2KD–FTV)

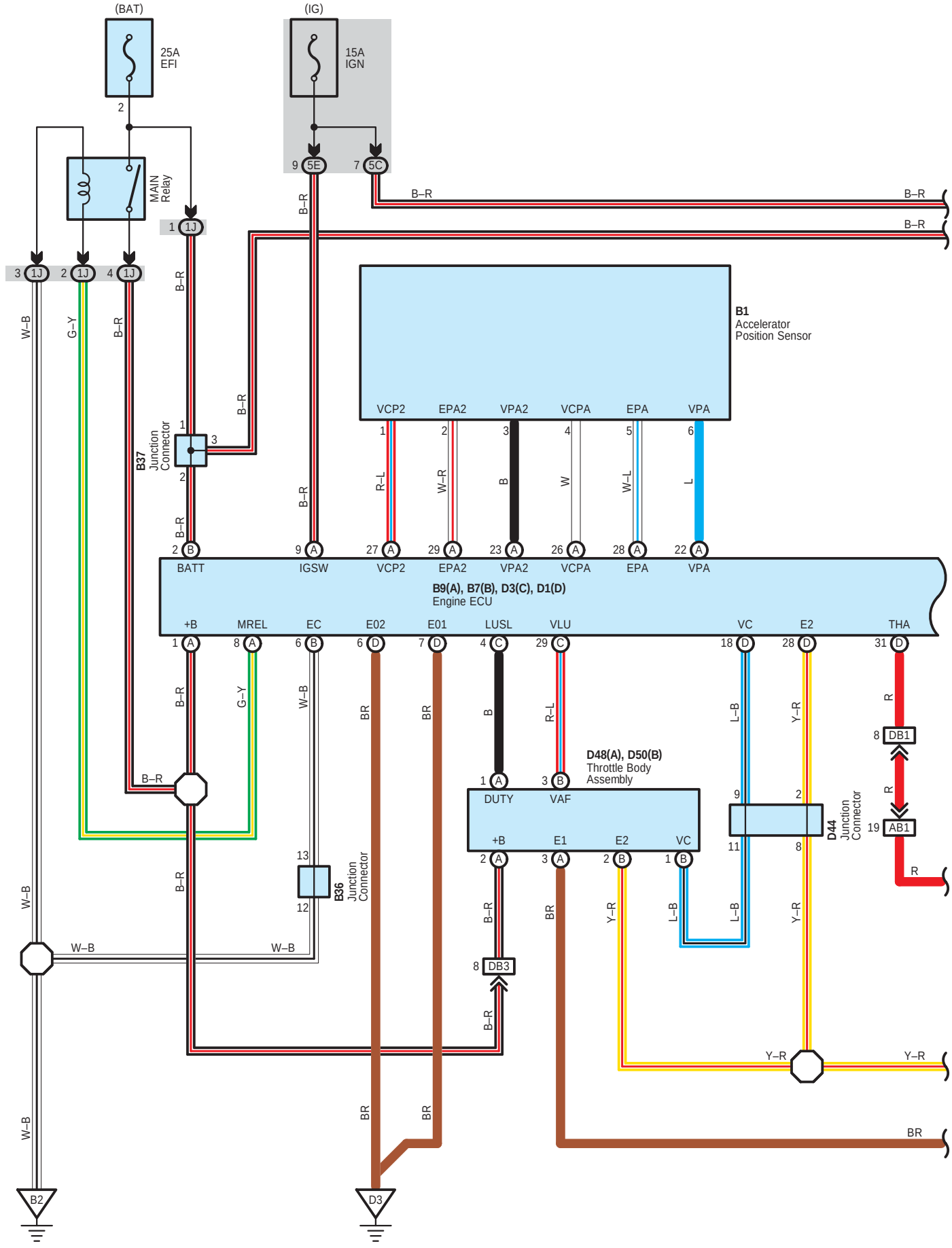

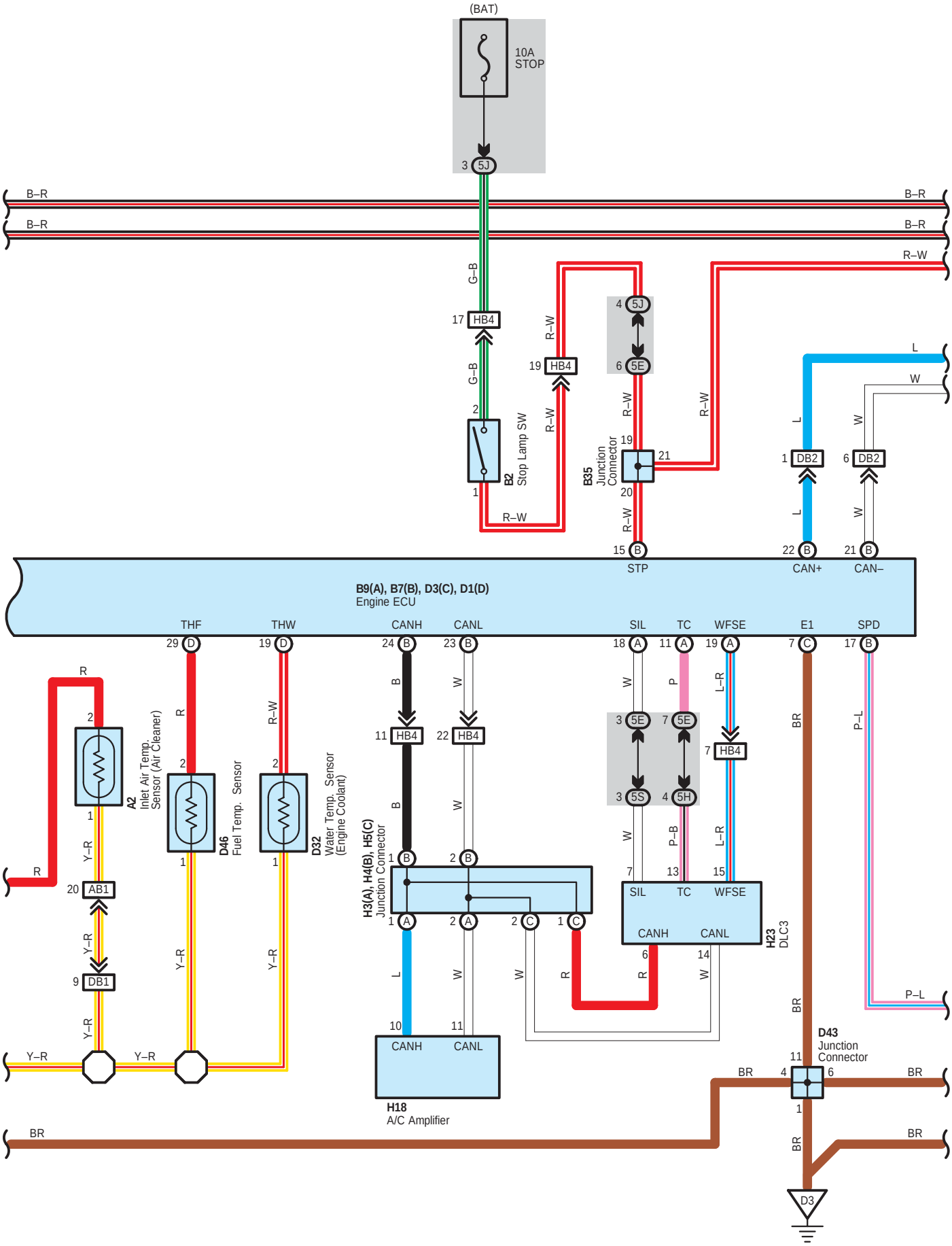
(BAT)
10A
STOP
3 5J
B–R
B–R
B–R
B–R
G–B
17 HB4
G–B
2
1
B2
Stop Lamp SW
R–W
19 HB4
R–W
R–W
4 5J
6 5E
R–W
R–W
B35
Junction
Connector
19
21
20
R–W
15 B
STP
R–W
L
W
L
W
1 DB2
6 DB2
L
W
22 B
CAN+
21 B
CAN–
B9(A), B7(B), D3(C), D1(D)
Engine ECU
THF
THW
CANH
CANL
SIL
TC
WFSE
E1
SPD
29 D
19 D
24 B
23 B
18 A
11 A
19 A
7 C
17 B
R
2
1
A2
Inlet Air Temp.
Sensor (Air Cleaner)
R
2
1
D46
Fuel Temp. Sensor
R–W
2
1
D32
Water Temp. Sensor
(Engine Coolant)
B
W
11 HB4
22 HB4
B
W
1 B
2 B
H3(A), H4(B), H5(C)
Junction Connector
1 A
2 A
2 C
1 C
L
W
W
R
10
11
CANH
CANL
H18
A/C Amplifier
L–R
7 HB4
L–R
P
3 5E
7 5E
3 5S
4 5H
W
P–B
7
13
15
SIL
TC
WFSE
CANH
CANL
6
14
R
W
H23
DLC3
BR
BR
P–L
P–L
D43
Junction
Connector
11
4
6
1
BR
BR
BR
BR
D3
R
2
1
Y–R
20 AB1
Y–R
9 DB1
Y–R
Y–R
Y–R
Y–R
Y–R
R
BR

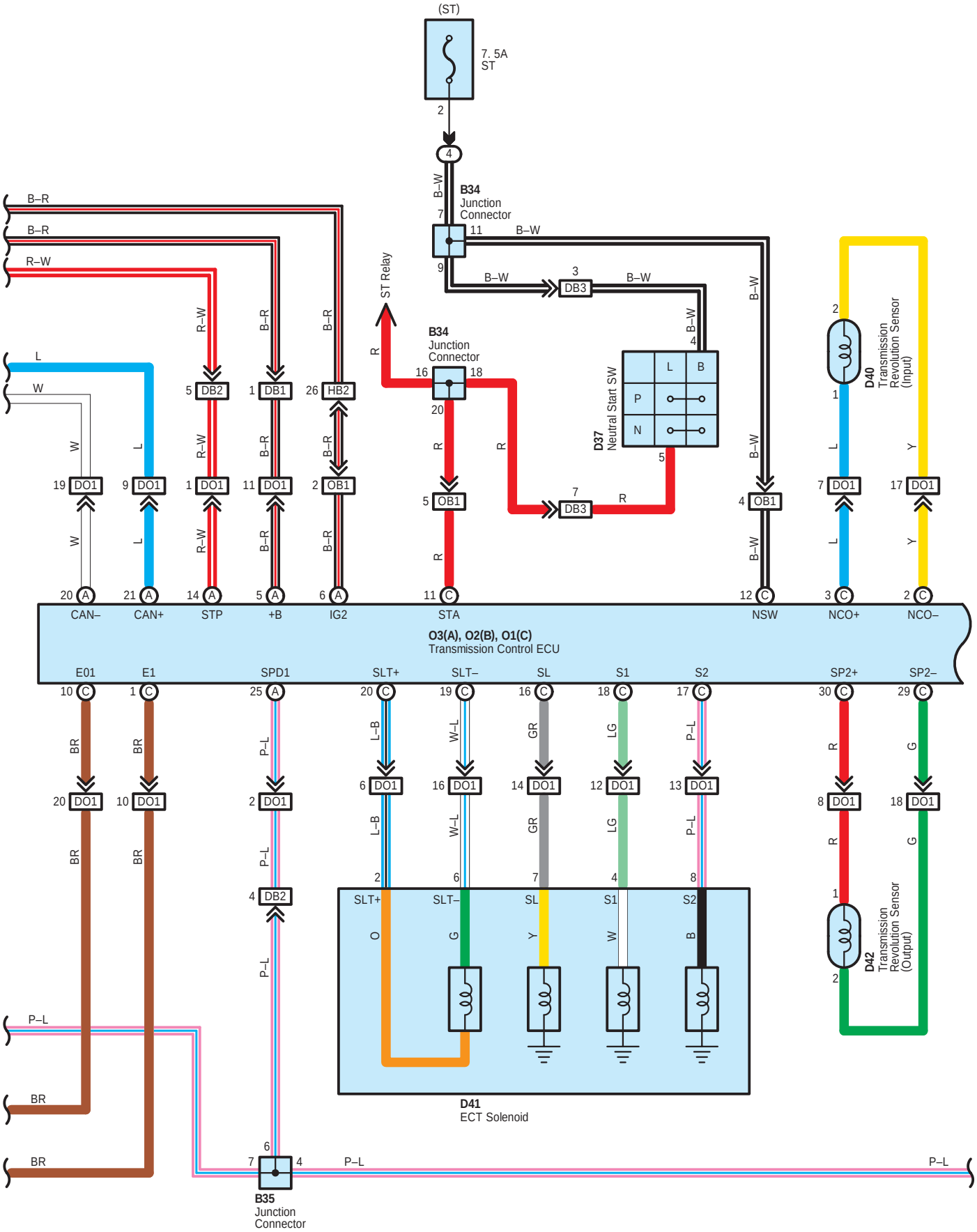
(ST)
7. 5A
ST
B34
Junction
Connector
ST Relay
D37
Neutral Start SW
D40
Transmission
Revolution Sensor
(Input)
D42
Transmission
Revolution Sensor
(Output)
D41
ECT Solenoid
B35
Junction
Connector
O3(A), O2(B), O1(C)
Transmission Control ECU
CAN–
CAN+
STP
+B
IG2
STA
NSW
NCO+
NCO–
E01
E1
SPD1
SLT+
SLT–
SL
S1
S2
SP2+
SP2–

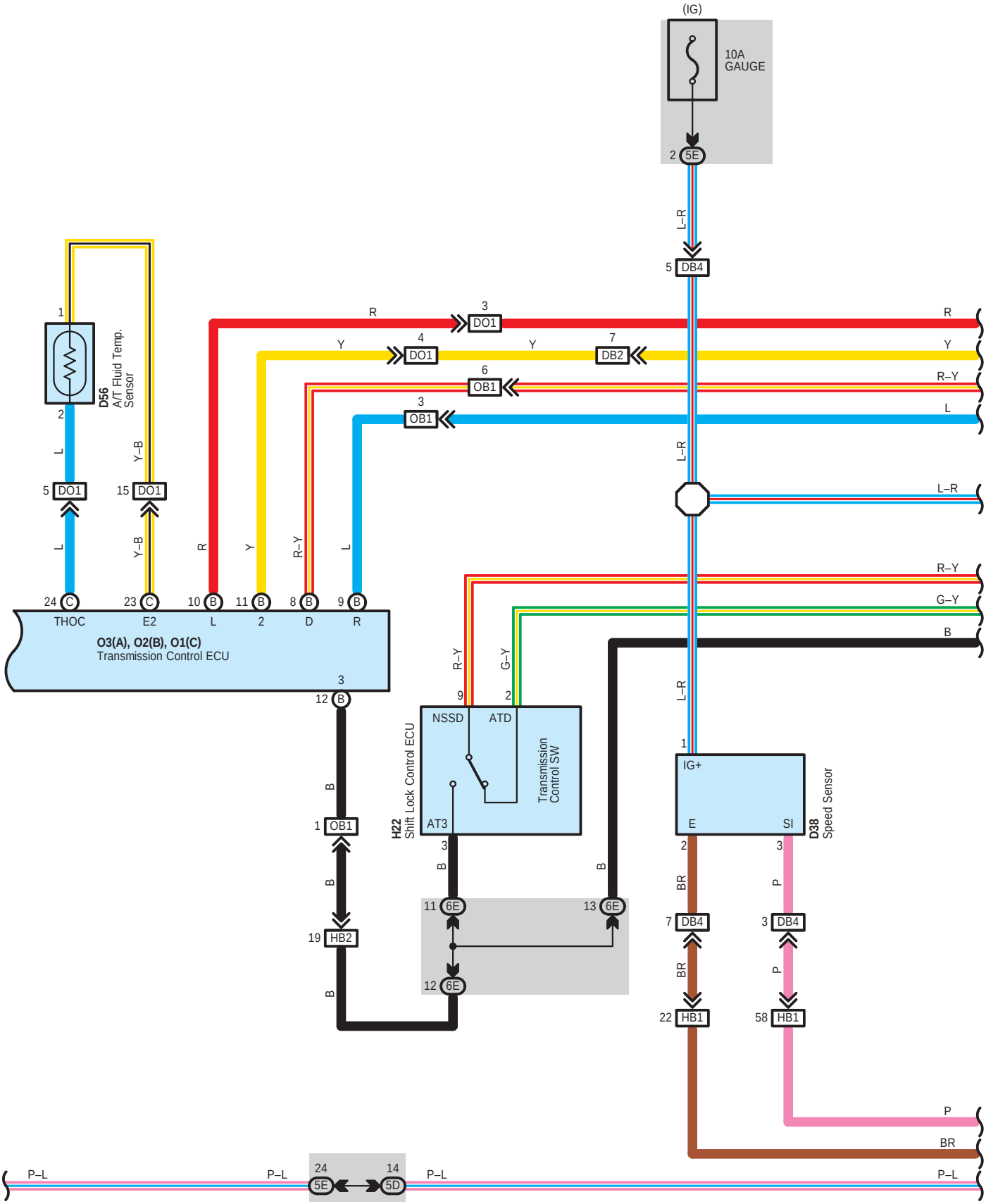
(IG)
10A
GAUGE
2 5E
L–R
5 DB4
D56
A/T Fluid Temp.
Sensor
1
2
L
Y–B
5 DO1
15 DO1
R
Y
R–Y
L
3 DO1
4 DO1
7 DB2
6 OB1
3 OB1
24 C
23 C
10 B
11 B
8 B
9 B
THOC
E2
L
2
D
R
O3(A), O2(B), O1(C)
Transmission Control ECU
12 B
B
1 OB1
19 HB2
H22
Shift Lock Control ECU
NSSD
ATD
AT3
Transmission
Control SW
9
2
3
11 6E
12 6E
13 6E
G–Y
B
1
IG+
E
SI
D38
Speed Sensor
2
3
BR
P
7 DB4
3 DB4
22 HB1
58 HB1
P–L
24
5E
14
5D

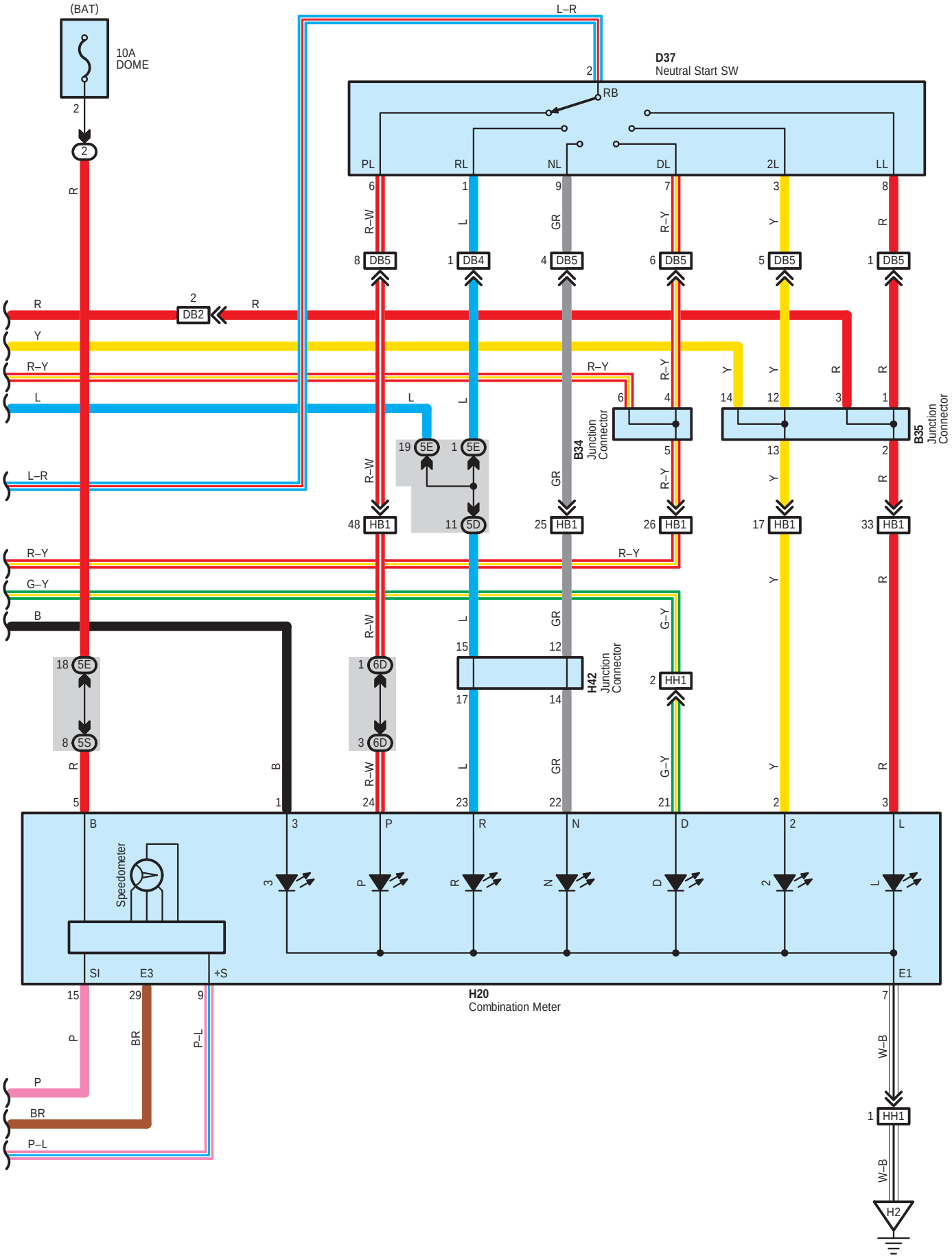
(BAT)
10A
DOME
L–R
D37
Neutral Start SW
RB
PL
RL
NL
DL
2L
LL
DB5
DB4
DB2
B34
Junction
Connector
B35
Junction
Connector
H42
Junction
Connector
HB1
5E
5D
5S
6D
HH1
R
Y
R–Y
L
L–R
G–Y
B
R–W
GR
G–Y
W–B
P
BR
P–L
Speedometer
SI
E3
+S
E1
H20
Combination Meter
H2

**System Outline**

Previous automatic transmissions have selected each gear shift using mechanically controlled throttle hydraulic pressure, governor hydraulic pressure and lock–up hydraulic pressure. The electronically controlled transmission, however, electrically controls the line pressure, throttle pressure, lock–up pressure and accumulator pressure etc. through the solenoid valve. The electronically controlled transmission is a system which precisely controls gear shift timing and lock–up timing in response to the vehicle's driving conditions and the engine condition detected by various sensors. It makes smooth driving possible by shift selection for each gear which is the most appropriate to the driving conditions at that time, and by preventing downing, squat and gear shift shock when starting off.

**1. Lock–Up Operation**

When the transmission control ECU decides based on each signal that the lock–up condition has been met, the current flows through TERMINAL SL of the transmission control ECU to TERMINAL 7 of the ECT solenoid to GROUND, causing lock–up operation.

**2. Stop Lamp SW Circuit**

If the brake pedal is depressed (Stop lamp SW on) when driving in lock–up condition, a signal is input to TERMINAL STP of the transmission control ECU. The transmission control ECU operates and cuts the current to the solenoid to release lock–up.

**○ : Parts Location**

| Code | See Page | Code | See Page | Code | See Page |
|---|---|---|---|---|---|
| A2 | 48 (LHD) | D32 | 53 (*5) | H3 A | 42, 49 (LHD) |
| | 56 (RHD) | D37 | 45 (*2) | | 42, 57 (RHD) |
| B1 | 48 (LHD) | | 53 (*5) | H4 B | 42, 49 (LHD) |
| | 56 (RHD) | D38 | 45 (*2) | | 42, 57 (RHD) |
| B2 | 48 (LHD) | | 53 (*5) | H5 C | 42, 49 (LHD) |
| | 56 (RHD) | D40 | 45 (*2) | | 42, 57 (RHD) |
| B7 B | 45 (*2) | | 53 (*5) | H18 | 49 (LHD) |
| | 53 (*5) | D41 | 45 (*2) | | 57 (RHD) |
| B9 A | 45 (*2) | | 53 (*5) | H20 | 49 (LHD) |
| | 53 (*5) | D42 | 45 (*2) | | 57 (RHD) |
| B34 | 48 (LHD) | | 53 (*5) | H22 | 49 (LHD) |
| | 56 (RHD) | D43 | 45 (*2) | | 57 (RHD) |
| B35 | 45 (*2) | | 53 (*5) | H23 | 49 (LHD) |
| | 53 (*5) | D44 | 45 (*2) | | 57 (RHD) |
| B36 | 45 (*2) | | 53 (*5) | H42 | 49 (LHD) |
| | 53 (*5) | D46 | 45 (*2) | | 57 (RHD) |
| B37 | 45 (*2) | | 53 (*5) | O1 C | 48 (LHD) |
| | 53 (*5) | D48 A | 45 (*2) | | 56 (RHD) |
| D1 D | 45 (*2) | | 53 (*5) | O2 B | 48 (LHD) |
| | 53 (*5) | D50 B | 45 (*2) | | 56 (RHD) |
| D3 C | 45 (*2) | | 53 (*5) | O3 A | 48 (LHD) |
| | 53 (*5) | D56 | 45 (*2) | | 56 (RHD) |
| D32 | 45 (*2) | | 53 (*5) | | |

**⬭ : Relay Blocks**

| Code | See Page | Relay Blocks (Relay Block Location) |
|---|---|---|
| 2 | 28 | Engine Room R/B No.2 (Inside of Battery Room) |
| 4 | 29 | Instrument Panel R/B (Under the Glove Box) |

* 1 : LHD 2TR–FE * 2 : LHD 2KD–FTV * 3 : LHD 5L–E * 4 : RHD 2TR–FE * 5 : RHD 2KD–FTV * 6 : RHD 5L–E * 7 : 2TR–FE
* 8 : 2KD–FTV, 5L–E

# ECT and A/T Indicator (2KD–FTV)

**: Junction Block and Wire Harness Connector**

| Code | See Page | Junction Block and Wire Harness (Connector Location) |
|---|---|---|
| 1J | 25 | Engine Room Main Wire and Engine Room J/B No.1 (Engine Compartment Front) |
| 5C | 30 | Instrument Panel Wire and Instrument Panel J/B (Left Side of Instrument Panel) |
| 5D | | |
| 5E | 30 | Engine Room Main Wire and Instrument Panel J/B (Left Side of Instrument Panel) |
| 5H | 30 | Instrument Panel Wire and Instrument Panel J/B (Left Side of Instrument Panel) |
| 5J | | |
| 5S | 31 | |
| 6D | 38 (LHD) | Instrument Panel Wire and Center J/B (Instrument Panel Reinforcement LH) |
| | 38 (RHD) | Instrument Panel Wire and Center J/B (Instrument Panel Reinforcement RH) |
| 6E | 38 (LHD) | Instrument Panel Wire and Center J/B (Instrument Panel Reinforcement LH) |
| | 38 (RHD) | Instrument Panel Wire and Center J/B (Instrument Panel Reinforcement RH) |

**: Connector Joining Wire Harness and Wire Harness**

| Code | See Page | Joining Wire Harness and Wire Harness (Connector Location) |
|---|---|---|
| AB1 | 64 (LHD) | Cowl to Head Lamp Wire and Engine Room Main Wire (Left Side of the Instrument Panel J/B) |
| | 72 (RHD) | |
| DB1 | 61 (*2) | Engine Wire and Engine Room Main Wire (Front Side of Engine Room R/B No.1) |
| | 69 (*5) | |
| DB2 | 61 (*2) | |
| | 69 (*5) | |
| DB3 | 61 (*2) | |
| | 69 (*5) | |
| DB4 | 61 (*2) | |
| | 69 (*5) | |
| DB5 | 61 (*2) | |
| | 69 (*5) | |
| DO1 | 61 (*2) | Engine Wire and Floor Wire (Front Floor Panel Right) |
| | 69 (*5) | |
| HB1 | 64 (LHD) | Instrument Panel Wire and Engine Room Main Wire (Under the Instrument Panel J/B) |
| | 72 (RHD) | |
| HB2 | 64 (LHD) | |
| | 72 (RHD) | |
| HB4 | 64 (LHD) | |
| | 72 (RHD) | |
| HH1 | 64 (LHD) | Instrument Panel Wire and Instrument Panel Wire (Near the Steering Column) |
| | 72 (RHD) | Instrument Panel Wire and Instrument Panel Wire (Instrument Panel Reinforcement RH) |
| OB1 | 65 (LHD) | Floor Wire and Engine Room Main Wire (RH Side of Instrument Panel R/B) |
| | 73 (RHD) | Floor Wire and Engine Room Main Wire (Near the Stop Lamp SW) |

**: Ground Points**

| Code | See Page | Ground Points Location |
|---|---|---|
| B2 | 61 (*2) | Front Floor Panel Right |
| | 69 (*5) | |
| D3 | 61 (*2) | Engine Block |
| | 69 (*5) | |
| H2 | 64 (LHD) | Instrument Panel Reinforcement |
| | 72 (RHD) | |

* 1 : LHD 2TR–FE * 2 : LHD 2KD–FTV * 3 : LHD 5L–E * 4 : RHD 2TR–FE * 5 : RHD 2KD–FTV * 6 : RHD 5L–E * 7 : 2TR–FE
* 8 : 2KD–FTV, 5L–E

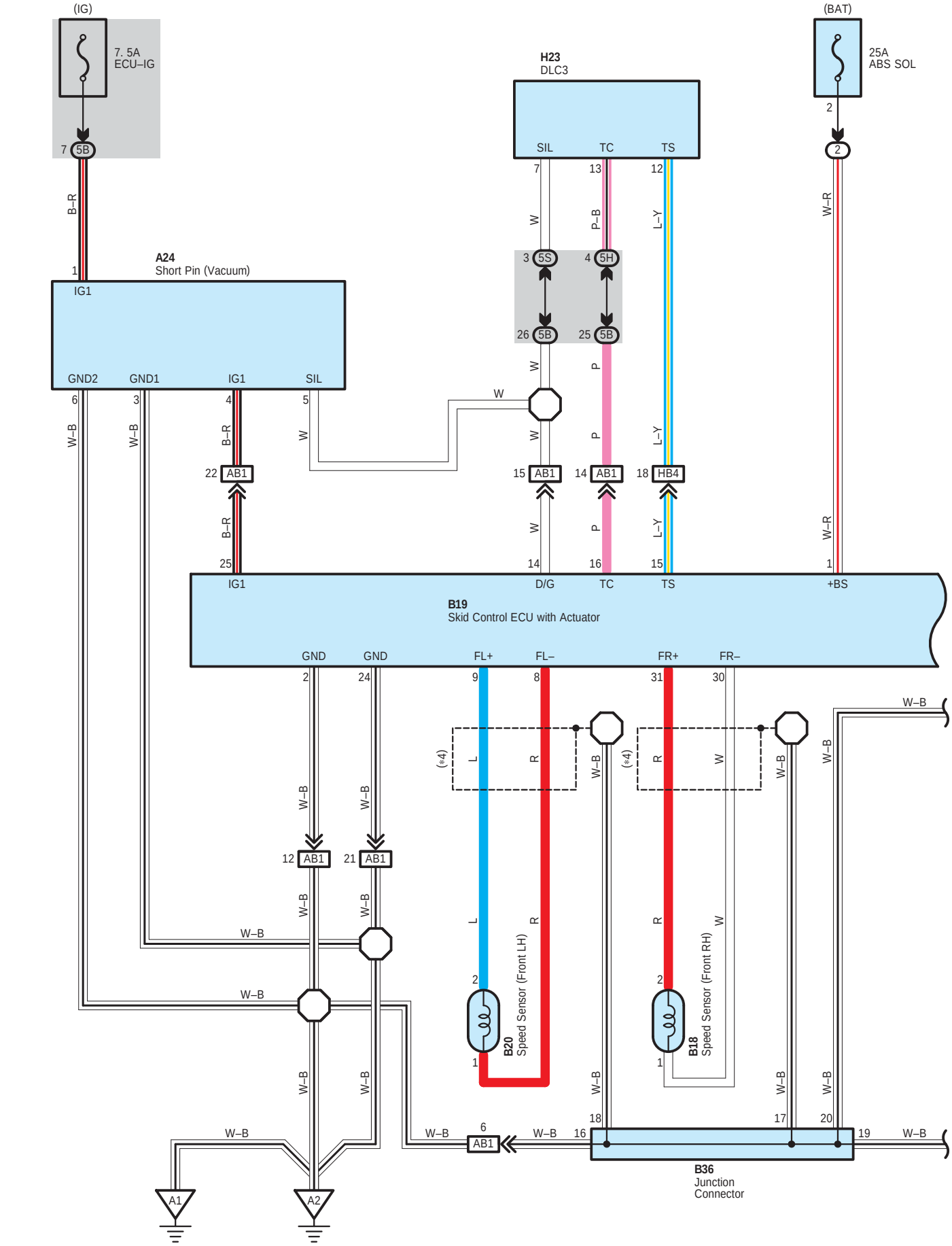
(IG)
7. 5A
ECU–IG
(BAT)
25A
ABS SOL
H23
DLC3
SIL
TC
TS
A24
Short Pin (Vacuum)
IG1
GND2
GND1
IG1
SIL
B19
Skid Control ECU with Actuator
IG1
D/G
TC
TS
+BS
GND
GND
FL+
FL–
FR+
FR–
B20
Speed Sensor (Front LH)
B18
Speed Sensor (Front RH)
B36
Junction
Connector
A1
A2
AB1
HB4
5B
5S
5H
(*4)

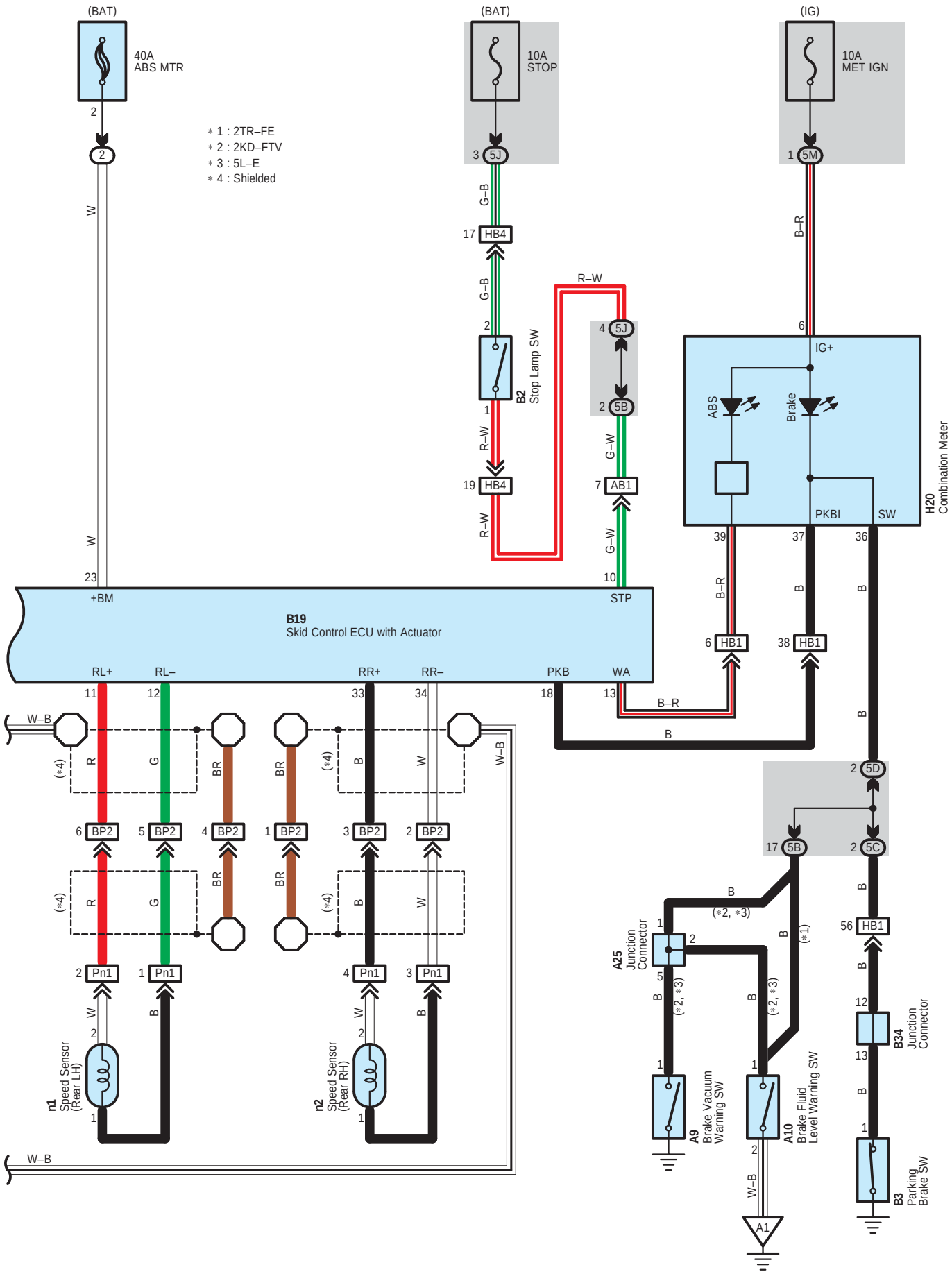
(BAT)
40A
ABS MTR
(BAT)
10A
STOP
(IG)
10A
MET IGN
∗1 : 2TR–FE
∗2 : 2KD–FTV
∗3 : 5L–E
∗4 : Shielded
B2
Stop Lamp SW
H20
Combination Meter
IG+
ABS
Brake
PKBI
SW
B19
Skid Control ECU with Actuator
+BM
STP
RL+
RL–
RR+
RR–
PKB
WA
n1
Speed Sensor
(Rear LH)
n2
Speed Sensor
(Rear RH)
A25
Junction
Connector
A9
Brake Vacuum
Warning SW
A10
Brake Fluid
Level Warning SW
B34
Junction
Connector
B3
Parking
Brake SW
A1

**System Outline**

This system controls the respective brake fluid pressures acting on the brake cylinders of the right front wheel, left front wheel, and rear wheels when the brakes are applied in a panic stop so that the wheels do not lock.
This results in improved directional stability and steerability during panic braking.

**1. Input Signal**

(1) Speed sensor signal

The speed of the wheels is detected and input to TERMINALS FL+, FR+, RL+ and RR+ of the skid control ECU with actuator.

(2) Stop lamp SW signal

A signal is input to TERMINAL STP of the skid control ECU with actuator when the brake pedal is depressed.

**2. System Operation**

During sudden braking, the skid control ECU with actuator which has signals input from each sensor lets the hydraulic pressure acting on each wheel cylinder escape to the reservoir.
The pump inside the skid control ECU with actuator is also operating at this time and it returns the brake fluid from the reservoir to the master cylinder, thus preventing locking of vehicle wheels.
If the skid control ECU with actuator judges that the hydraulic pressure acting on the wheel cylinder is insufficient, the current acting on the solenoid is controlled and the hydraulic pressure is increased.
Holding of the hydraulic pressure is also controlled by the ECU, by the same method as above, by repeated pressure reduction. Holding and increase are repeated to maintain vehicle stability and to improve steerability during sudden braking.

**○ : Parts Location**

| Code | See Page | Code | See Page | Code | See Page |
|---|---|---|---|---|---|
| A9 | 48 (LHD) | B18 | 53 (*5) | B36 | 44 (*1) |
| | 56 (RHD) | | 54 (*6) | | 45 (*2) |
| A10 | 48 (LHD) | B19 | 44 (*1) | | 46 (*3) |
| | 56 (RHD) | | 45 (*2) | | 52 (*4) |
| A24 | 48 (LHD) | | 46 (*3) | | 53 (*5) |
| | 56 (RHD) | | 52 (*4) | | 54 (*6) |
| A25 | 48 (LHD) | | 53 (*5) | H20 | 49 (LHD) |
| | 56 (RHD) | | 54 (*6) | | 57 (RHD) |
| B2 | 48 (LHD) | B20 | 44 (*1) | H23 | 49 (LHD) |
| | 56 (RHD) | | 45 (*2) | | 57 (RHD) |
| B3 | 48 (LHD) | | 46 (*3) | n1 | 51 (LHD) |
| | 56 (RHD) | | 52 (*4) | | 59 (RHD) |
| B18 | 44 (*1) | | 53 (*5) | n2 | 51 (LHD) |
| | 45 (*2) | | 54 (*6) | | 59 (RHD) |
| | 46 (*3) | B34 | 48 (LHD) | | |
| | 52 (*4) | | 56 (RHD) | | |

**▭ : Relay Blocks**

| Code | See Page | Relay Blocks (Relay Block Location) |
|---|---|---|
| 2 | 28 | Engine Room R/B No.2 (Inside of Battery Room) |

**▭ : Junction Block and Wire Harness Connector**

| Code | See Page | Junction Block and Wire Harness (Connector Location) |
|---|---|---|
| 5B | 30 | Cowl to Head Lamp Wire and Instrument Panel J/B (Left Side of Instrument Panel) |
| 5C | 30 | Instrument Panel Wire and Instrument Panel J/B (Left Side of Instrument Panel) |
| 5D | | |
| 5H | | |
| 5J | | |
| 5M | 31 | |
| 5S | | |

* 1 : LHD 2TR–FE * 2 : LHD 2KD–FTV * 3 : LHD 5L–E * 4 : RHD 2TR–FE * 5 : RHD 2KD–FTV * 6 : RHD 5L–E * 7 : 2TR–FE
* 8 : 2KD–FTV, 5L–E

: **Connector Joining Wire Harness and Wire Harness**

| Code | See Page | Joining Wire Harness and Wire Harness (Connector Location) |
|---|---|---|
| AB1 | 64 (LHD) | Cowl to Head Lamp Wire and Engine Room Main Wire (Left Side of the Instrument Panel J/B) |
| | 72 (RHD) | |
| BP2 | 66 (LHD) | Engine Room Main Wire and Frame Wire (Under the Floor Panel) |
| | 74 (RHD) | |
| HB1 | 64 (LHD) | Instrument Panel Wire and Engine Room Main Wire (Under the Instrument Panel J/B) |
| | 72 (RHD) | |
| HB4 | 64 (LHD) | |
| | 72 (RHD) | |
| Pn1 | 66 (LHD) | Frame Wire and Skid Control Sensor Wire (Under the Floor Panel) |
| | 74 (RHD) | |

: **Ground Points**

| Code | See Page | Ground Points Location |
|---|---|---|
| A1 | 64 (LHD) | Dash Panel Right |
| | 72 (RHD) | |
| A2 | 64 (LHD) | Dash Panel Left |
| | 72 (RHD) | |

## Memo

NOTICE: When inspecting or repairing the SRS, perform service in accordance with the following precautionary instructions and the procedure, and precautions in the Repair Manual applicable for the model year.

- Malfunction symptoms of the SRS are difficult to confirm, so the DTCs become the most important source of information when troubleshooting. When troubleshooting the SRS, always inspect the DTCs before disconnecting the battery.
- **Work must be started more than 90 seconds after the ignition SW is turned to the "LOCK" position and the negative (–) terminal cable is disconnected from the battery.**
  **(The SRS is equipped with a back–up power source so that if work is started within 90 seconds from disconnecting the negative (–) terminal cable of the battery, the SRS may deploy.)**
- When the negative (–) terminal cable is disconnected from the battery, the memory of the clock and audio system will be cleared. So before starting work, make a record of the contents in the audio memory system. When work is finished, reset the audio systems as they were before and adjust the clock. Some vehicles have power tilt steering, power telescopic steering, power seat and power outside rear view mirror which are all equipped with memory function. However, it is not possible to make a record of these memory contents. So when the work is finished, it will be necessary to explain it to your customer, and ask the customer to adjust the features and reset the memory. To avoid erasing the memory in each system, never use a back–up power supply from outside the vehicle.
- Before repair, remove the airbag sensor if shocks are likely to be applied to the sensor during repair.
- Do not expose the following parts directly to hot air or flame;
- Even in cases of a minor collision where the SRS does not deploy, the following parts should be inspected;
- Never use SRS parts from another vehicle. When replacing parts, replace with new parts.
- For the purpose of reuse, never disassemble and repair the following parts.
- If the following parts have been dropped, or have cracks, dents and other defects in their case, bracket, and connector, replace with new one.
- Use a volt/ohmmeter with high impedance (10 kΩ/V minimum) for troubleshooting electrical circuits of the system.
- Information labels are attached to the periphery of the SRS components. Follow the instructions of the notice.
- After work on the SRS is completed, check the SRS warning light.
- If the vehicle is equipped with a mobile communication system, refer to the precaution in the IN section of the Repair Manual.

* Steering wheel pad
* Front passenger airbag assembly
* Seat belt pretensioner
* Center airbag sensor assembly
* Front airbag sensor assembly

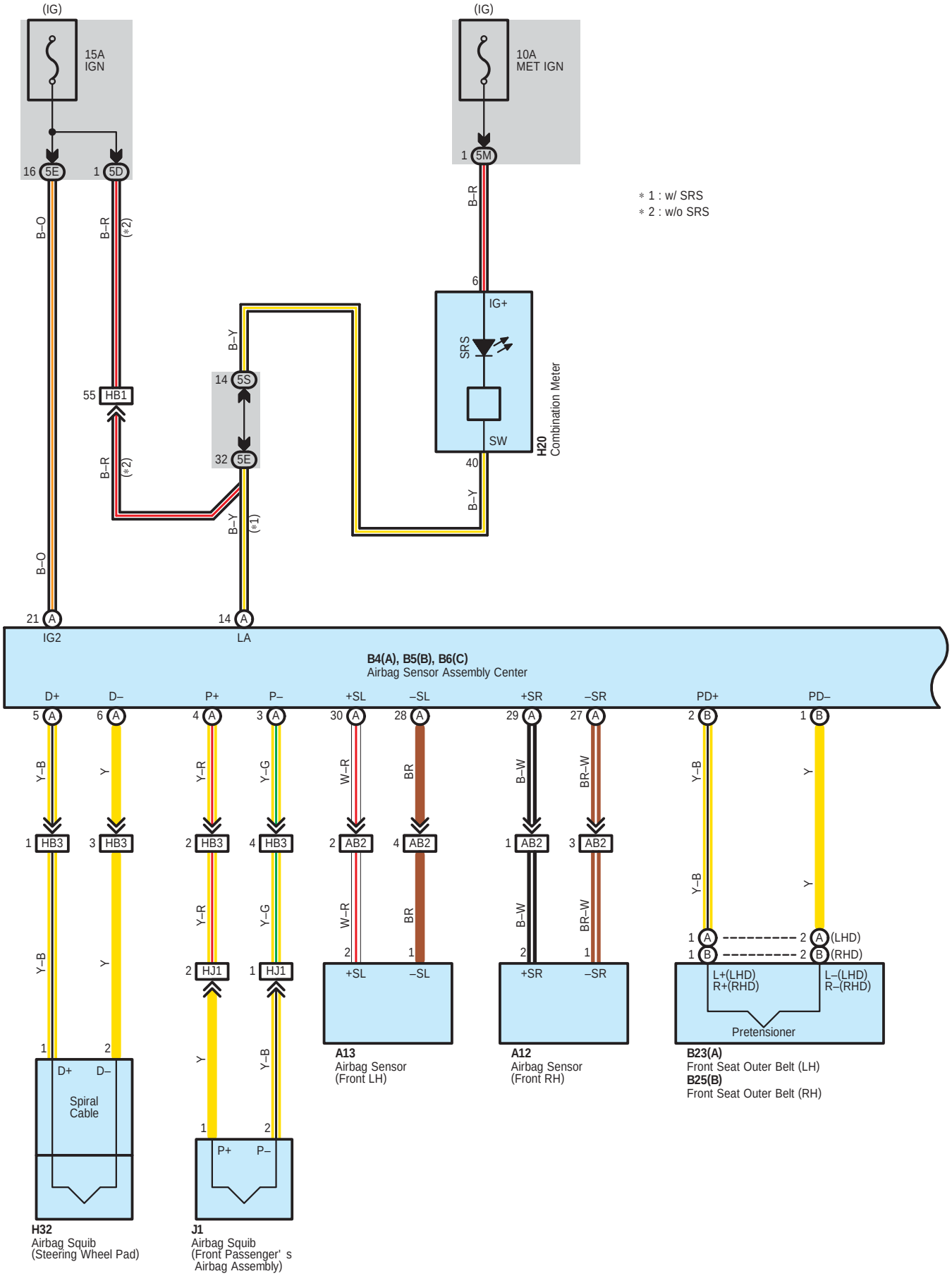
(IG)
15A
IGN
(IG)
10A
MET IGN
16 5E
1 5D
1 5M
B–O
B–R
(*2)
B–R
6
IG+
SRS
SW
H20
Combination Meter
40
B–Y
B–Y
14 5S
55 HB1
B–R
(*2)
32 5E
B–Y
(*1)
B–O
21 A
IG2
14 A
LA
* 1 : w/ SRS
* 2 : w/o SRS
B4(A), B5(B), B6(C)
Airbag Sensor Assembly Center
D+
D–
P+
P–
+SL
–SL
+SR
–SR
PD+
PD–
5 A
6 A
4 A
3 A
30 A
28 A
29 A
27 A
2 B
1 B
Y–B
Y
Y–R
Y–G
W–R
BR
B–W
BR–W
Y–B
Y
1 HB3
3 HB3
2 HB3
4 HB3
2 AB2
4 AB2
1 AB2
3 AB2
Y–B
Y
Y–R
Y–G
W–R
BR
B–W
BR–W
Y–B
Y
2 HJ1
1 HJ1
1 A
1 B
2 A (LHD)
2 B (RHD)
1
2
D+
D–
Spiral
Cable
P+
P–
+SL
–SL
+SR
–SR
L+(LHD)
R+(RHD)
L–(LHD)
R–(RHD)
Pretensioner
H32
Airbag Squib
(Steering Wheel Pad)
J1
Airbag Squib
(Front Passenger' s
Airbag Assembly)
A13
Airbag Sensor
(Front LH)
A12
Airbag Sensor
(Front RH)
B23(A)
Front Seat Outer Belt (LH)
B25(B)
Front Seat Outer Belt (RH)

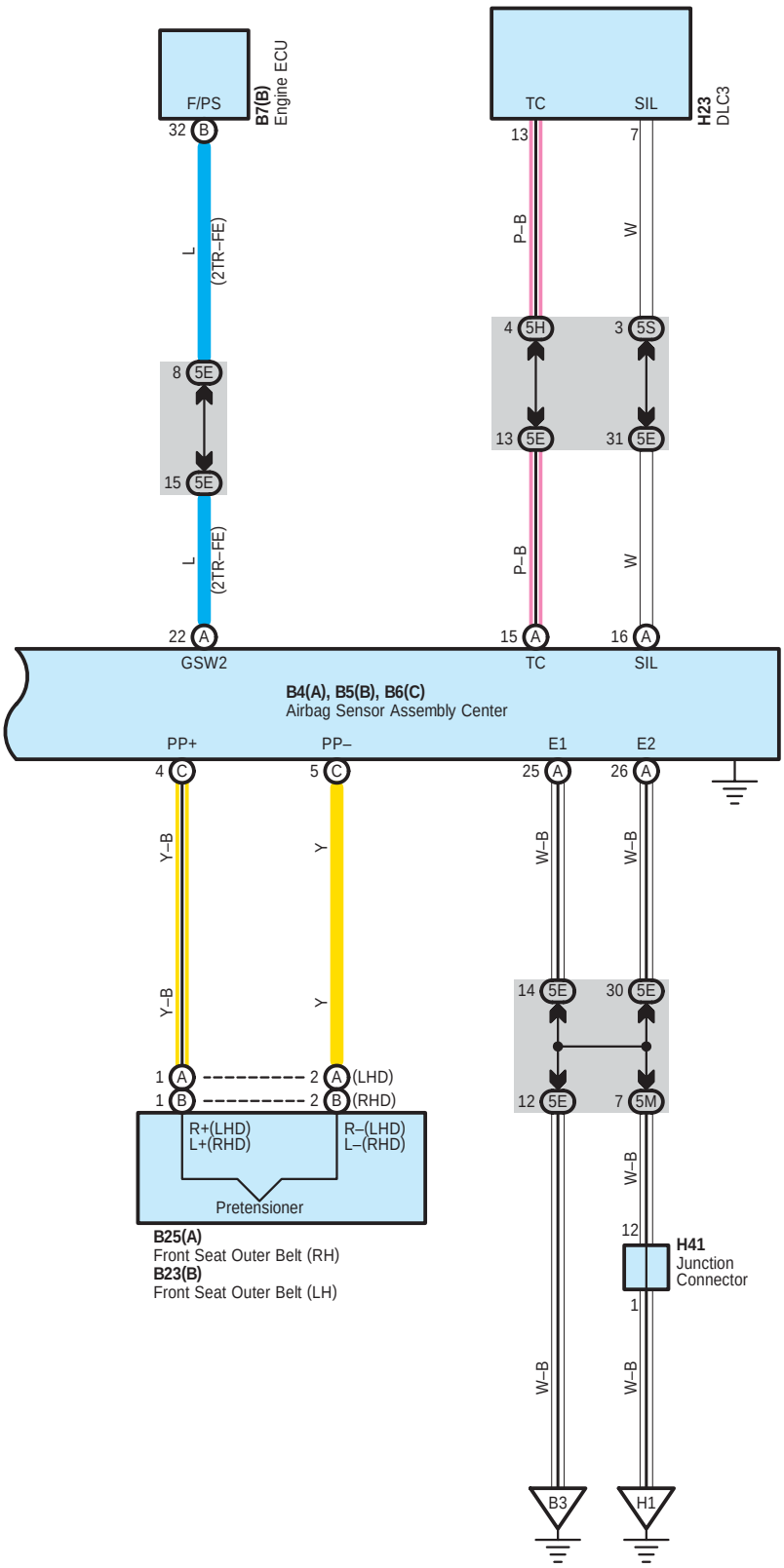
F/PS
B7(B)
Engine ECU
32 B
L
(2TR–FE)
8 5E
15 5E
L
(2TR–FE)
22 A
GSW2
TC
SIL
H23
DLC3
13
7
P–B
W
4 5H
3 5S
13 5E
31 5E
P–B
W
15 A
16 A
TC
SIL
B4(A), B5(B), B6(C)
Airbag Sensor Assembly Center
PP+
PP–
E1
E2
4 C
5 C
25 A
26 A
Y–B
Y
W–B
W–B
Y–B
Y
14 5E
30 5E
1 A
2 A
(LHD)
1 B
2 B
(RHD)
12 5E
7 5M
R+(LHD)
L+(RHD)
R–(LHD)
L–(RHD)
Pretensioner
W–B
12
H41
Junction
Connector
1
B25(A)
Front Seat Outer Belt (RH)
B23(B)
Front Seat Outer Belt (LH)
W–B
W–B
B3
H1

**System Outline**

The SRS is a driver and front passenger protection device which has a supplemental role to the seat belts.
When the ignition SW is turned to ON, the current from the ignition SW flows to TERMINAL 21 of the airbag sensor assembly center.
If an accident occurs while driving, when the frontal impact exceeds a set level, the current from the ignition SW flows to TERMINALS (A) 5, (A) 4, (B) 2 and (C) 4 of the airbag sensor assembly center to the airbag squibs and the front seat outer belt TERMINALS (A) 6, (A) 3, (B) 1 and (C) 5 of the airbag sensor assembly center to TERMINAL (A) 25, (A) 26 or BODY GROUND to GROUND, so that current flows to the airbag squibs and the front seat outer belt and causes them to operate.
The airbag stored inside the steering wheel pad is instantaneously expanded to soften the shock to the driver.
The airbag stored inside the passenger's instrument panel is instantaneously expanded to soften the shock to the front passenger.

**: Parts Location**

| Code | | See Page | Code | | See Page | Code | See Page |
|---|---|---|---|---|---|---|---|
| A12 | | 48 (LHD) | B6 | C | 56 (RHD) | H23 | 49 (LHD) |
| | | 56 (RHD) | B7 | B | 44 (*1) | | 57 (RHD) |
| A13 | | 48 (LHD) | | | 52 (*4) | H32 | 49 (LHD) |
| | | 56 (RHD) | B23 | A | 50 (LHD) | | 57 (RHD) |
| B4 | A | 48 (LHD) | | B | 58 (RHD) | H41 | 49 (LHD) |
| | | 56 (RHD) | B25 | A | 50 (LHD) | | 57 (RHD) |
| B5 | B | 48 (LHD) | | B | 58 (RHD) | J1 | 48 (LHD) |
| | | 56 (RHD) | H20 | | 49 (LHD) | | 56 (RHD) |
| B6 | C | 48 (LHD) | | | 57 (RHD) | | |

**: Junction Block and Wire Harness Connector**

| Code | See Page | Junction Block and Wire Harness (Connector Location) |
|---|---|---|
| 5D | 30 | Instrument Panel Wire and Instrument Panel J/B (Left Side of Instrument Panel) |
| 5E | 30 | Engine Room Main Wire and Instrument Panel J/B (Left Side of Instrument Panel) |
| 5H | 30 | Instrument Panel Wire and Instrument Panel J/B (Left Side of Instrument Panel) |
| 5M | 31 | |
| 5S | | |

**: Connector Joining Wire Harness and Wire Harness**

| Code | See Page | Joining Wire Harness and Wire Harness (Connector Location) |
|---|---|---|
| AB2 | 64 (LHD) | Cowl to Head Lamp Wire and Engine Room Main Wire (RH Side of Instrument Panel R/B) |
| | 72 (RHD) | Cowl to Head Lamp Wire and Engine Room Main Wire (Near the Parking Brake SW) |
| HB1 | 64 (LHD) | Instrument Panel Wire and Engine Room Main Wire (Under the Instrument Panel J/B) |
| | 72 (RHD) | |
| HB3 | 64 (LHD) | |
| | 72 (RHD) | |
| HJ1 | 64 (LHD) | Instrument Panel Wire and Instrument Panel No.3 Wire (Upper Side of Glove Box) |
| | 72 (RHD) | |

**: Ground Points**

| Code | See Page | Ground Points Location |
|---|---|---|
| B3 | 60 (*1) | Front Floor Panel Left |
| | 61 (*2) | |
| | 62 (*3) | |
| | 68 (*4) | |
| | 69 (*5) | |
| | 70 (*6) | |
| H1 | 64 (LHD) | Instrument Panel Reinforcement |
| | 72 (RHD) | |

* 1 : LHD 2TR–FE * 2 : LHD 2KD–FTV * 3 : LHD 5L–E * 4 : RHD 2TR–FE * 5 : RHD 2KD–FTV * 6 : RHD 5L–E * 7 : 2TR–FE
* 8 : 2KD–FTV, 5L–E

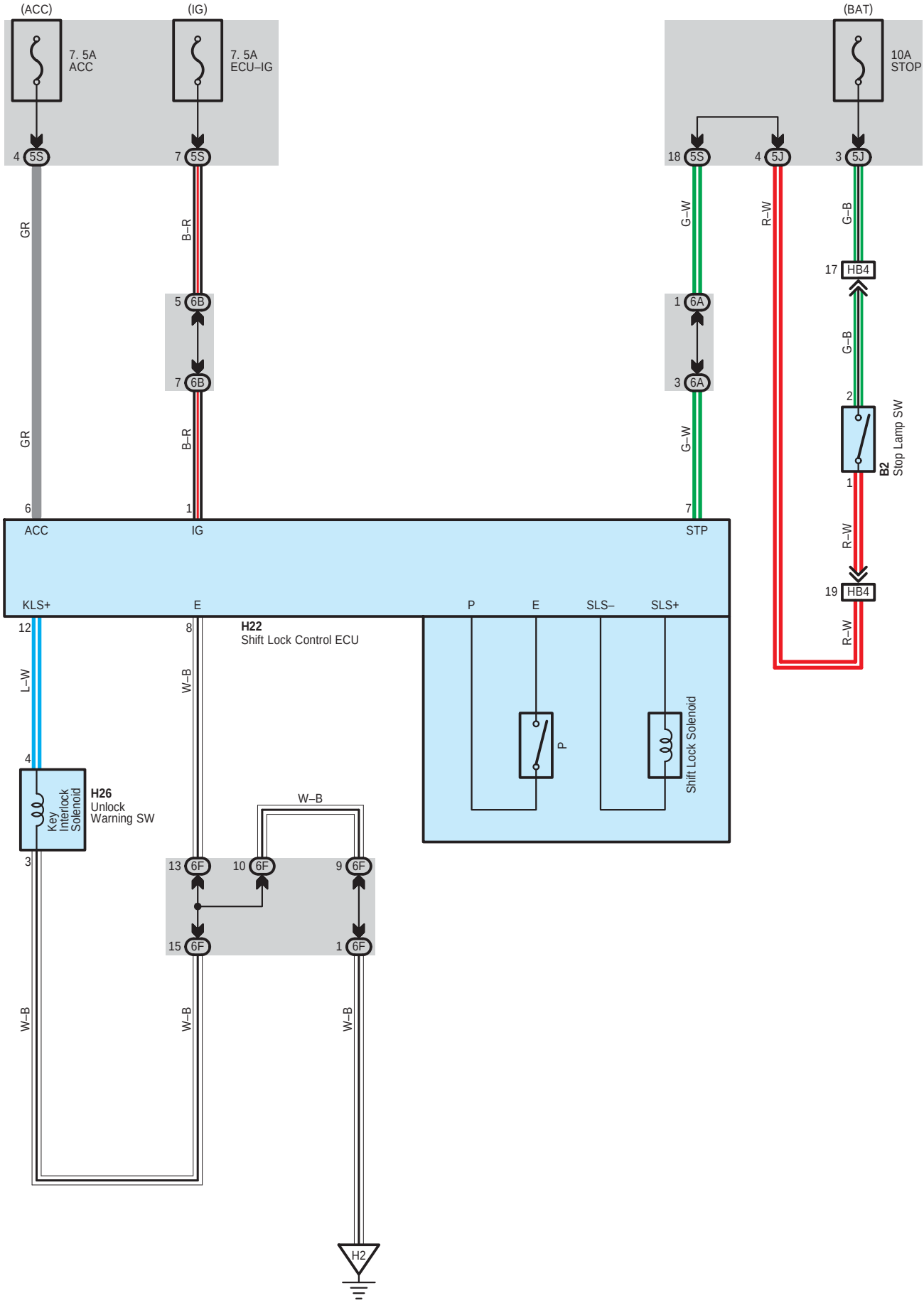
(ACC)
(IG)
(BAT)
7. 5A
ACC
7. 5A
ECU–IG
10A
STOP
4 5S
7 5S
18 5S
4 5J
3 5J
GR
B–R
G–W
R–W
G–B
17 HB4
5 6B
7 6B
1 6A
3 6A
G–B
G–W
B–R
2
B2
Stop Lamp SW
1
6
1
7
ACC
IG
STP
R–W
19 HB4
R–W
KLS+
E
P
E
SLS–
SLS+
12
8
H22
Shift Lock Control ECU
L–W
W–B
4
H26
Unlock
Warning SW
Key
Interlock
Solenoid
W–B
P
Shift Lock Solenoid
3
13 6F
10 6F
9 6F
15 6F
1 6F
W–B
W–B
W–B
H2

**System Outline**

When the ignition SW is turned to ACC position the current from the ACC fuse flows to TERMINAL 6 of the shift lock control ECU. When the ignition SW is turned to ON position, the current from the ECU–IG fuse flows to TERMINAL 1 of the shift lock control ECU.

**1. Shift Lock Mechanism**

If the brake pedal is depressed with the ignition SW set at ON (The stop lamp SW is on), the shift lock control ECU is activated, allowing the driver to change the shift lever to a position other than the P position.

**2. Key Interlock Mechanism**

With the ignition SW at ON or ACC position, when the shift lever is put in P position, the current flowing from TERMINAL 12 of the shift lock control ECU to key interlock solenoid is cut off. This causes the key interlock solenoid to turn off (Lock lever disengages from LOCK position) and the ignition key can be turned from ACC to LOCK position.

**: Parts Location**

| Code | See Page | Code | See Page | Code | See Page |
|---|---|---|---|---|---|
| B2 | 48 (LHD) | H22 | 49 (LHD) | H26 | 49 (LHD) |
| | 56 (RHD) | | 57 (RHD) | | 57 (RHD) |

**: Junction Block and Wire Harness Connector**

| Code | See Page | Junction Block and Wire Harness (Connector Location) |
|---|---|---|
| 5J | 30 | Instrument Panel Wire and Instrument Panel J/B (Left Side of Instrument Panel) |
| 5S | 31 | |
| 6A | 38 (LHD) | Instrument Panel Wire and Center J/B (Instrument Panel Reinforcement LH) |
| | 38 (RHD) | Instrument Panel Wire and Center J/B (Instrument Panel Reinforcement RH) |
| 6B | 38 (LHD) | Instrument Panel Wire and Center J/B (Instrument Panel Reinforcement LH) |
| | 38 (RHD) | Instrument Panel Wire and Center J/B (Instrument Panel Reinforcement RH) |
| 6F | 38 (LHD) | Instrument Panel Wire and Center J/B (Instrument Panel Reinforcement LH) |
| | 38 (RHD) | Instrument Panel Wire and Center J/B (Instrument Panel Reinforcement RH) |

**: Connector Joining Wire Harness and Wire Harness**

| Code | See Page | Joining Wire Harness and Wire Harness (Connector Location) |
|---|---|---|
| HB4 | 64 (LHD) | Instrument Panel Wire and Engine Room Main Wire (Under the Instrument Panel J/B) |
| | 72 (RHD) | |

**: Ground Points**

| Code | See Page | Ground Points Location |
|---|---|---|
| H2 | 64 (LHD) | Instrument Panel Reinforcement |
| | 72 (RHD) | |

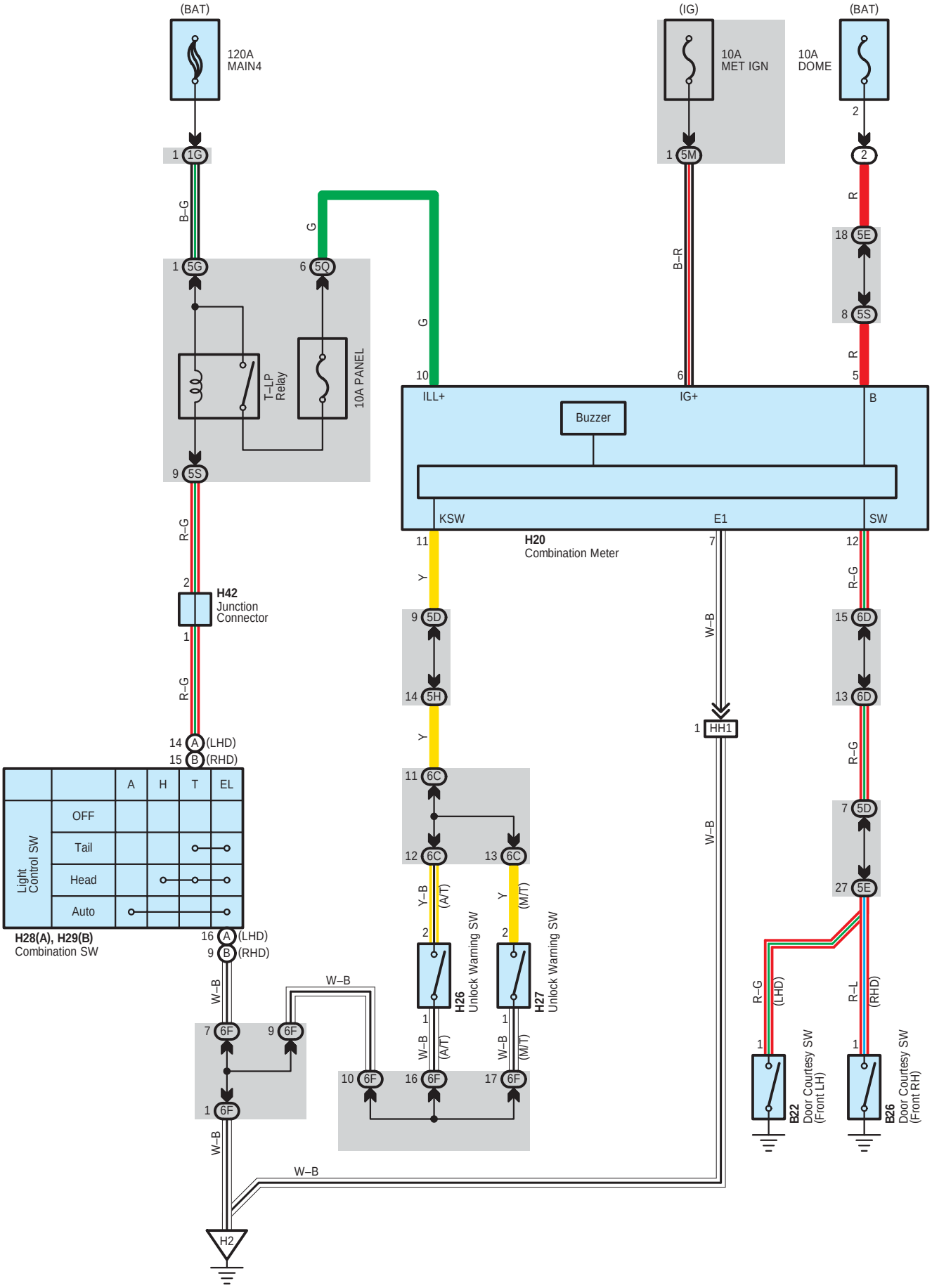
(BAT)
120A
MAIN4
1 1G
B–G
1 5G
G
6 5Q
T–LP
Relay
10A PANEL
9 5S
R–G
2
H42
Junction
Connector
1
R–G
14 A (LHD)
15 B (RHD)
Light
Control SW
A H T EL
OFF
Tail
Head
Auto
H28(A), H29(B)
Combination SW
16 A (LHD)
9 B (RHD)
W–B
7 6F 9 6F
1 6F
W–B
W–B
H2
(IG)
10A
MET IGN
1 5M
B–R
6
IG+
(BAT)
10A
DOME
2
R
18 5E
8 5S
R
5
B
10
ILL+
Buzzer
KSW
E1
SW
H20
Combination Meter
11
Y
9 5D
14 5H
Y
11 6C
12 6C 13 6C
Y–B (A/T)
Y (M/T)
2 2
H26
Unlock Warning SW
H27
Unlock Warning SW
1 1
W–B (A/T)
W–B (M/T)
10 6F 16 6F 17 6F
7
W–B
1 HH1
W–B
12
R–G
15 6D
13 6D
R–G
7 5D
27 5E
R–G (LHD)
R–L (RHD)
1 1
B22
Door Courtesy SW
(Front LH)
B26
Door Courtesy SW
(Front RH)

**System Outline**

The current is applied at all times to TERMINAL 5 of the combination meter through the DOME fuse.
When the ignition SW is turned to ON position, the current flows to TERMINAL 6 of the combination meter through the MET IGN fuse. When the light control SW is turned to TAIL or HEAD position, current is applied to TERMINAL 10 of the combination meter through the PANEL fuse.

**1. Key Reminder System**

When the driver door is opened with the ignition SW off and ignition key remaining in the key cylinder (Unlock warning SW on), a signal is input from the unlock warning SW to TERMINAL 11 of the combination meter, and from the door courtesy SW (Driver's side) to TERMINAL 12 of the combination meter. As a result, the buzzer in the combination meter goes on and warns the driver that the key is remaining in the key cylinder.

**2. Light Reminder System**

When the light control SW is in TAIL or HEAD position, the ignition SW turned to OFF from ON position, ignition key is not in the key cylinder and the driver's door opened (Door courtesy SW on), the current flows to TERMINAL 6 of the combination meter stops. As a result, the combination meter is activated and current flows from TERMINAL 5 of the combination meter, the buzzer in the combination meter goes on to remind the light is lighting up.

**: Parts Location**

| Code | See Page | Code | See Page | Code | | See Page |
|---|---|---|---|---|---|---|
| B22 | 50 (LHD) | H26 | 49 (LHD) | H28 | A | 49 (LHD) |
| B26 | 58 (RHD) | | 57 (RHD) | H29 | B | 57 (RHD) |
| H20 | 49 (LHD) | H27 | 49 (LHD) | H42 | | 49 (LHD) |
| | 57 (RHD) | | 57 (RHD) | | | 57 (RHD) |

**: Relay Blocks**

| Code | See Page | Relay Blocks (Relay Block Location) |
|---|---|---|
| 2 | 28 | Engine Room R/B No.2 (Inside of Battery Room) |

**: Junction Block and Wire Harness Connector**

| Code | See Page | Junction Block and Wire Harness (Connector Location) |
|---|---|---|
| 1G | 24 | Engine Room Main Wire and Engine Room J/B No.1 (Engine Compartment Front) |
| 5D | 30 | Instrument Panel Wire and Instrument Panel J/B (Left Side of Instrument Panel) |
| 5E | 30 | Engine Room Main Wire and Instrument Panel J/B (Left Side of Instrument Panel) |
| 5G | | |
| 5H | 30 | Instrument Panel Wire and Instrument Panel J/B (Left Side of Instrument Panel) |
| 5M | 31 | |
| 5Q | | |
| 5S | | |
| 6C | 38 (LHD) | Instrument Panel Wire and Center J/B (Instrument Panel Reinforcement LH) |
| | 38 (RHD) | Instrument Panel Wire and Center J/B (Instrument Panel Reinforcement RH) |
| 6D | 38 (LHD) | Instrument Panel Wire and Center J/B (Instrument Panel Reinforcement LH) |
| | 38 (RHD) | Instrument Panel Wire and Center J/B (Instrument Panel Reinforcement RH) |
| 6F | 38 (LHD) | Instrument Panel Wire and Center J/B (Instrument Panel Reinforcement LH) |
| | 38 (RHD) | Instrument Panel Wire and Center J/B (Instrument Panel Reinforcement RH) |

**: Connector Joining Wire Harness and Wire Harness**

| Code | See Page | Joining Wire Harness and Wire Harness (Connector Location) |
|---|---|---|
| HH1 | 64 (LHD) | Instrument Panel Wire and Instrument Panel Wire (Near the Steering Column) |
| | 72 (RHD) | Instrument Panel Wire and Instrument Panel Wire (Instrument Panel Reinforcement RH) |

**: Ground Points**

| Code | See Page | Ground Points Location |
|---|---|---|
| H2 | 64 (LHD) | Instrument Panel Reinforcement |
| | 72 (RHD) | |

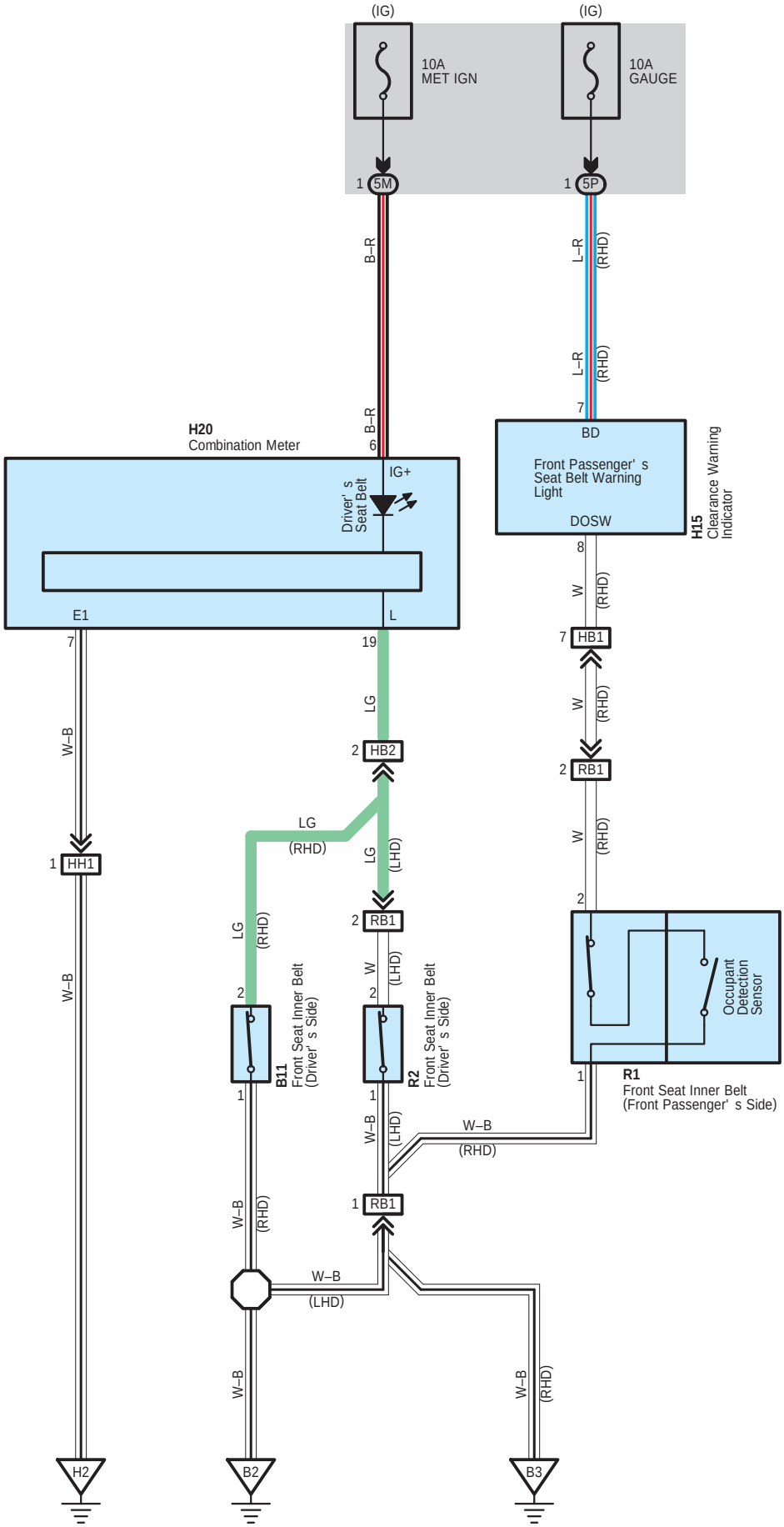
(IG)
10A
MET IGN
1
5M
(IG)
10A
GAUGE
1
5P
B–R
L–R
(RHD)
L–R
(RHD)
7
BD
Front Passenger' s
Seat Belt Warning
Light
DOSW
H15
Clearance Warning
Indicator
H20
Combination Meter
B–R
6
IG+
Driver' s
Seat Belt
E1
L
8
W
(RHD)
7
HB1
W
(RHD)
2
RB1
W
(RHD)
2
7
19
W–B
LG
2
HB2
LG
(RHD)
LG
(LHD)
1
HH1
2
RB1
LG
(RHD)
W
(LHD)
2
2
Occupant
Detection
Sensor
W–B
2
2
B11
Front Seat Inner Belt
(Driver' s Side)
R2
Front Seat Inner Belt
(Driver' s Side)
1
R1
Front Seat Inner Belt
(Front Passenger' s Side)
1
1
W–B
(LHD)
W–B
(RHD)
W–B
(RHD)
1
RB1
W–B
(LHD)
W–B
(LHD)
W–B
(RHD)
H2
B2
B3

**System Outline**

When the ignition SW is turned to ON position, the current from the MET IGN fuse flows to TERMINAL 6 of the combination meter.

**Seat Belt Warning System**

When the ignition SW turned on, a signal is input to the combination meter. To determine whether the driver has fastened the seat belt, a signal is input from the front seat inner belt (Driver's side) to TERMINAL 19 of the combination meter. When the seat belt is not fastened, the driver's seat belt warning light in the combination meter blinks.

**: Parts Location**

| Code | See Page | Code | See Page | Code | See Page |
|---|---|---|---|---|---|
| B11 | 52 (*4) | H20 | 49 (LHD) | R2 | 50 (LHD) |
| | 53 (*5) | | 57 (RHD) | | |
| H15 | 57 (RHD) | R1 | 58 (RHD) | | |

**: Junction Block and Wire Harness Connector**

| Code | See Page | Junction Block and Wire Harness (Connector Location) |
|---|---|---|
| 5M | 31 | Instrument Panel Wire and Instrument Panel J/B (Left Side of Instrument Panel) |
| 5P | | |

**: Connector Joining Wire Harness and Wire Harness**

| Code | See Page | Joining Wire Harness and Wire Harness (Connector Location) |
|---|---|---|
| HB1 | 64 (LHD) | Instrument Panel Wire and Engine Room Main Wire (Under the Instrument Panel J/B) |
| | 72 (RHD) | |
| HB2 | 64 (LHD) | |
| | 72 (RHD) | |
| HH1 | 64 (LHD) | Instrument Panel Wire and Instrument Panel Wire (Near the Steering Column) |
| | 72 (RHD) | Instrument Panel Wire and Instrument Panel Wire (Instrument Panel Reinforcement RH) |
| RB1 | 66 (LHD) | Seat No.2 Wire and Engine Room Main Wire (Center Pillar LH) |
| | 74 (RHD) | |

**: Ground Points**

| Code | See Page | Ground Points Location |
|---|---|---|
| B2 | 60 (*1) | Front Floor Panel Right |
| | 61 (*2) | |
| | 68 (*4) | |
| | 69 (*5) | |
| B3 | 68 (*4) | Front Floor Panel Left |
| | 69 (*5) | |
| H2 | 64 (LHD) | Instrument Panel Reinforcement |
| | 72 (RHD) | |

* 1 : LHD 2TR–FE * 2 : LHD 2KD–FTV * 3 : LHD 5L–E * 4 : RHD 2TR–FE * 5 : RHD 2KD–FTV * 6 : RHD 5L–E * 7 : 2TR–FE
* 8 : 2KD–FTV, 5L–E

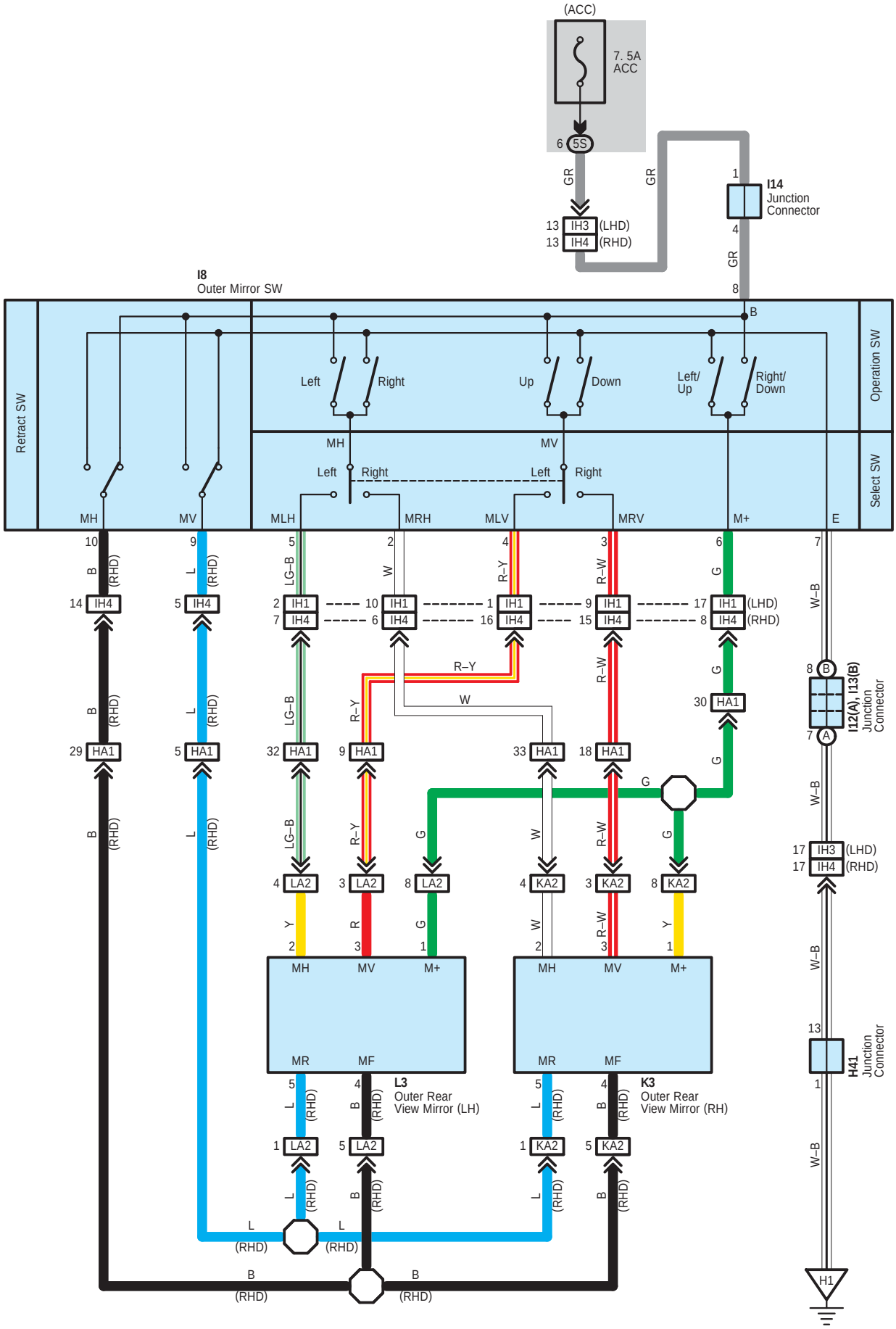
(ACC)
7. 5A
ACC
6 5S
GR
13 IH3 (LHD)
13 IH4 (RHD)
GR
1
I14
Junction
Connector
4
GR
8
I8
Outer Mirror SW
B
Retract SW
Operation SW
Select SW
Left
Right
Up
Down
Left/
Up
Right/
Down
MH
MV
Left
Right
Left
Right
MH
MV
MLH
MRH
MLV
MRV
M+
E
10 B (RHD) 14 IH4
9 L (RHD) 5 IH4
5 LG–B 2 IH1 7 IH4
2 W 10 IH1 6 IH4
4 R–Y 1 IH1 16 IH4
3 R–W 9 IH1 15 IH4
6 G 17 IH1 (LHD) 17 IH1 8 IH4 (RHD)
7 W–B
8 B
7 A
I12(A), I13(B)
Junction
Connector
B (RHD) 29 HA1
L (RHD) 5 HA1
LG–B 32 HA1
R–Y 9 HA1
R–Y
W
33 HA1
R–W 18 HA1
G 30 HA1
G
G
LG–B
R–Y
G
W
R–W
G
4 LA2
3 LA2
8 LA2
4 KA2
3 KA2
8 KA2
Y
R
G
W
R–W
Y
2
3
1
2
3
1
MH
MV
M+
MH
MV
M+
MR
MF
MR
MF
5 L (RHD) 1 LA2
4 B (RHD) 5 LA2
L3
Outer Rear
View Mirror (LH)
5 L (RHD) 1 KA2
4 B (RHD) 5 KA2
K3
Outer Rear
View Mirror (RH)
L (RHD)
L (RHD)
B (RHD)
B (RHD)
17 IH3 (LHD)
17 IH4 (RHD)
W–B
W–B
13
H41
Junction
Connector
1
W–B
H1

### : Parts Location

| Code | See Page | Code | See Page | Code | See Page |
|---|---|---|---|---|---|
| H41 | 49 (LHD) | I12 A | 56 (RHD) | K3 | 50 (LHD) |
| | 57 (RHD) | I13 B | 48 (LHD) | | 58 (RHD) |
| I8 | 48 (LHD) | | 56 (RHD) | L3 | 50 (LHD) |
| | 56 (RHD) | I14 | 48 (LHD) | | 58 (RHD) |
| I12 A | 48 (LHD) | | 56 (RHD) | | |

### : Junction Block and Wire Harness Connector

| Code | See Page | Junction Block and Wire Harness (Connector Location) |
|---|---|---|
| 5S | 31 | Instrument Panel Wire and Instrument Panel J/B (Left Side of Instrument Panel) |

### : Connector Joining Wire Harness and Wire Harness

| Code | See Page | Joining Wire Harness and Wire Harness (Connector Location) |
|---|---|---|
| HA1 | 64 (LHD) | Instrument Panel Wire and Cowl to Head Lamp Wire (Under the Instrument Panel J/B) |
| | 72 (RHD) | |
| IH1 | 64 (LHD) | Instrument Panel No.2 Wire and Instrument Panel Wire (Instrument Panel Reinforcement LH) |
| IH3 | 64 (LHD) | Instrument Panel No.2 Wire and Instrument Panel Wire (Instrument Panel Reinforcement RH) |
| IH4 | 72 (RHD) | |
| KA2 | 65 (LHD) | Front Door RH Wire and Cowl to Head Lamp Wire (Right Kick Panel) |
| | 73 (RHD) | |
| LA2 | 65 (LHD) | Front Door LH Wire and Cowl to Head Lamp Wire (Left Kick Panel) |
| | 73 (RHD) | |

### : Ground Points

| Code | See Page | Ground Points Location |
|---|---|---|
| H1 | 64 (LHD) | Instrument Panel Reinforcement |
| | 72 (RHD) | |

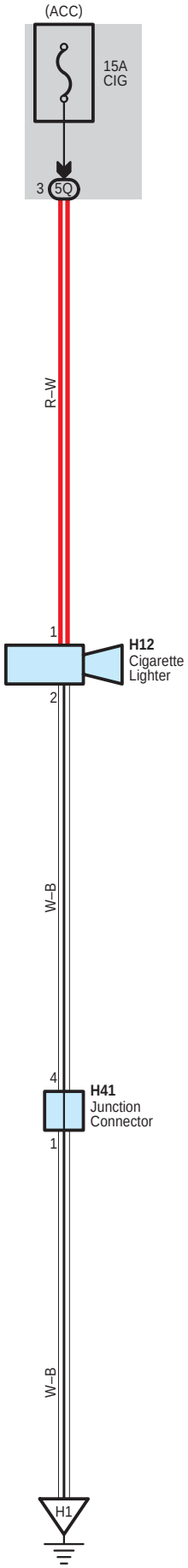
(ACC)
15A
CIG
3
5Q
R–W
1
H12
Cigarette
Lighter
2
W–B
4
H41
Junction
Connector
1
W–B
H1

**○ : Parts Location**

| Code | See Page | Code | See Page | Code | See Page |
|---|---|---|---|---|---|
| H12 | 49 (LHD) | H41 | 49 (LHD) | | |
| | 57 (RHD) | | 57 (RHD) | | |

**: Junction Block and Wire Harness Connector**

| Code | See Page | Junction Block and Wire Harness (Connector Location) |
|---|---|---|
| 5Q | 31 | Instrument Panel Wire and Instrument Panel J/B (Left Side of Instrument Panel) |

**▽ : Ground Points**

| Code | See Page | Ground Points Location |
|---|---|---|
| H1 | 64 (LHD) | Instrument Panel Reinforcement |
| | 72 (RHD) | |

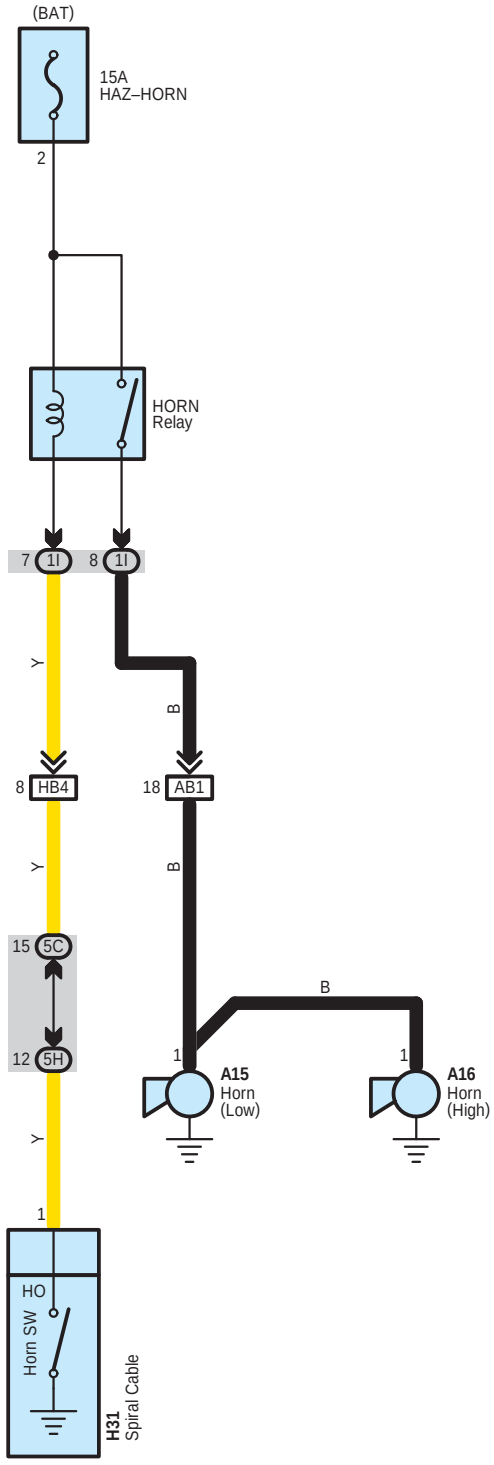
(BAT)
15A
HAZ–HORN
2
HORN
Relay
7 1I
8 1I
Y
B
8 HB4
18 AB1
Y
B
15 5C
12 5H
B
1
A15
Horn
(Low)
1
A16
Horn
(High)
Y
1
HO
Horn SW
H31
Spiral Cable

**○ : Parts Location**

| Code | See Page | Code | See Page | Code | See Page |
|---|---|---|---|---|---|
| A15 | 48 (LHD) | A16 | 48 (LHD) | H31 | 49 (LHD) |
| | 56 (RHD) | | 56 (RHD) | | 57 (RHD) |

**⬭ : Junction Block and Wire Harness Connector**

| Code | See Page | Junction Block and Wire Harness (Connector Location) |
|---|---|---|
| 1I | 25 | Engine Room Main Wire and Engine Room J/B No.1 (Engine Compartment Front) |
| 5C | 30 | Instrument Panel Wire and Instrument Panel J/B (Left Side of Instrument Panel) |
| 5H | | |

**▭ : Connector Joining Wire Harness and Wire Harness**

| Code | See Page | Joining Wire Harness and Wire Harness (Connector Location) |
|---|---|---|
| AB1 | 64 (LHD) | Cowl to Head Lamp Wire and Engine Room Main Wire (Left Side of the Instrument Panel J/B) |
| | 72 (RHD) | |
| HB4 | 64 (LHD) | Instrument Panel Wire and Engine Room Main Wire (Under the Instrument Panel J/B) |
| | 72 (RHD) | |

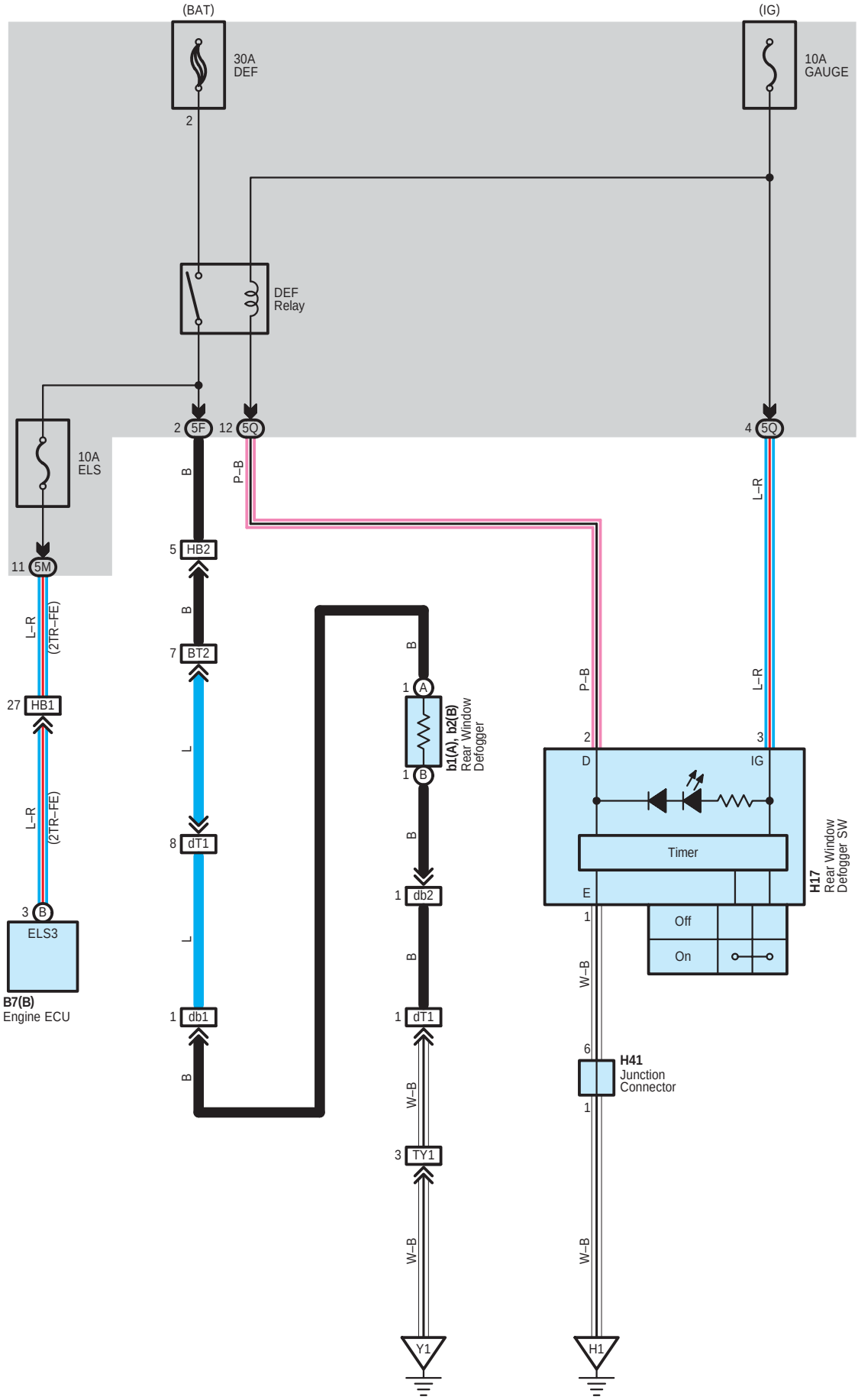
(BAT)
(IG)
30A
DEF
10A
GAUGE
2
DEF
Relay
10A
ELS
2 5F
12 5Q
4 5Q
11 5M
5 HB2
7 BT2
27 HB1
8 dT1
1 db1
3 B
ELS3
B7(B)
Engine ECU
1 A
1 B
b1(A), b2(B)
Rear Window
Defogger
1 db2
1 dT1
3 TY1
Y1
H1
D
IG
E
Timer
Off
On
H17
Rear Window
Defogger SW
6
H41
Junction
Connector
B
L
L–R
(2TR–FE)
P–B
W–B

### : Parts Location

| Code | | See Page | Code | | See Page | Code | | See Page |
|---|---|---|---|---|---|---|---|---|
| B7 | B | 44 (*1) | H41 | | 49 (LHD) | b2 | B | 51 (LHD) |
| | | 52 (*4) | | | 57 (RHD) | | | 59 (RHD) |
| H17 | | 49 (LHD) | b1 | A | 51 (LHD) | | | |
| | | 57 (RHD) | | | 59 (RHD) | | | |

### : Junction Block and Wire Harness Connector

| Code | See Page | Junction Block and Wire Harness (Connector Location) |
|---|---|---|
| 5F | 30 | Instrument Panel Wire and Instrument Panel J/B (Left Side of Instrument Panel) |
| 5M | 31 | |
| 5Q | | |

### : Connector Joining Wire Harness and Wire Harness

| Code | See Page | Joining Wire Harness and Wire Harness (Connector Location) |
|---|---|---|
| BT2 | 64 (LHD) | Engine Room Main Wire and Roof Wire (Cowl Side Panel LH) |
| | 72 (RHD) | |
| HB1 | 64 (LHD) | Instrument Panel Wire and Engine Room Main Wire (Under the Instrument Panel J/B) |
| | 72 (RHD) | |
| HB2 | 64 (LHD) | |
| | 72 (RHD) | |
| TY1 | 66 (LHD) | Roof Wire and Luggage Room No.3 Wire (Left Quarter Panel) |
| | 74 (RHD) | |
| dT1 | 66 (LHD) | Back Door No.3 Wire and Roof Wire (Rear of the Left Side of the Roof Panel) |
| | 74 (RHD) | |
| db1 | 66 (LHD) | Back Door No.3 Wire and Rear Window No.1 Wire (Near the Center Stop Lamp) |
| | 74 (RHD) | |
| db2 | 66 (LHD) | Back Door No.3 Wire and Rear Window No.1 Wire (Near the Rear Wiper Motor) |
| | 74 (RHD) | |

### : Ground Points

| Code | See Page | Ground Points Location |
|---|---|---|
| H1 | 64 (LHD) | Instrument Panel Reinforcement |
| | 72 (RHD) | |
| Y1 | 66 (LHD) | Left Quarter Panel |
| | 74 (RHD) | |

* 1 : LHD 2TR–FE * 2 : LHD 2KD–FTV * 3 : LHD 5L–E * 4 : RHD 2TR–FE * 5 : RHD 2KD–FTV * 6 : RHD 5L–E * 7 : 2TR–FE
* 8 : 2KD–FTV, 5L–E

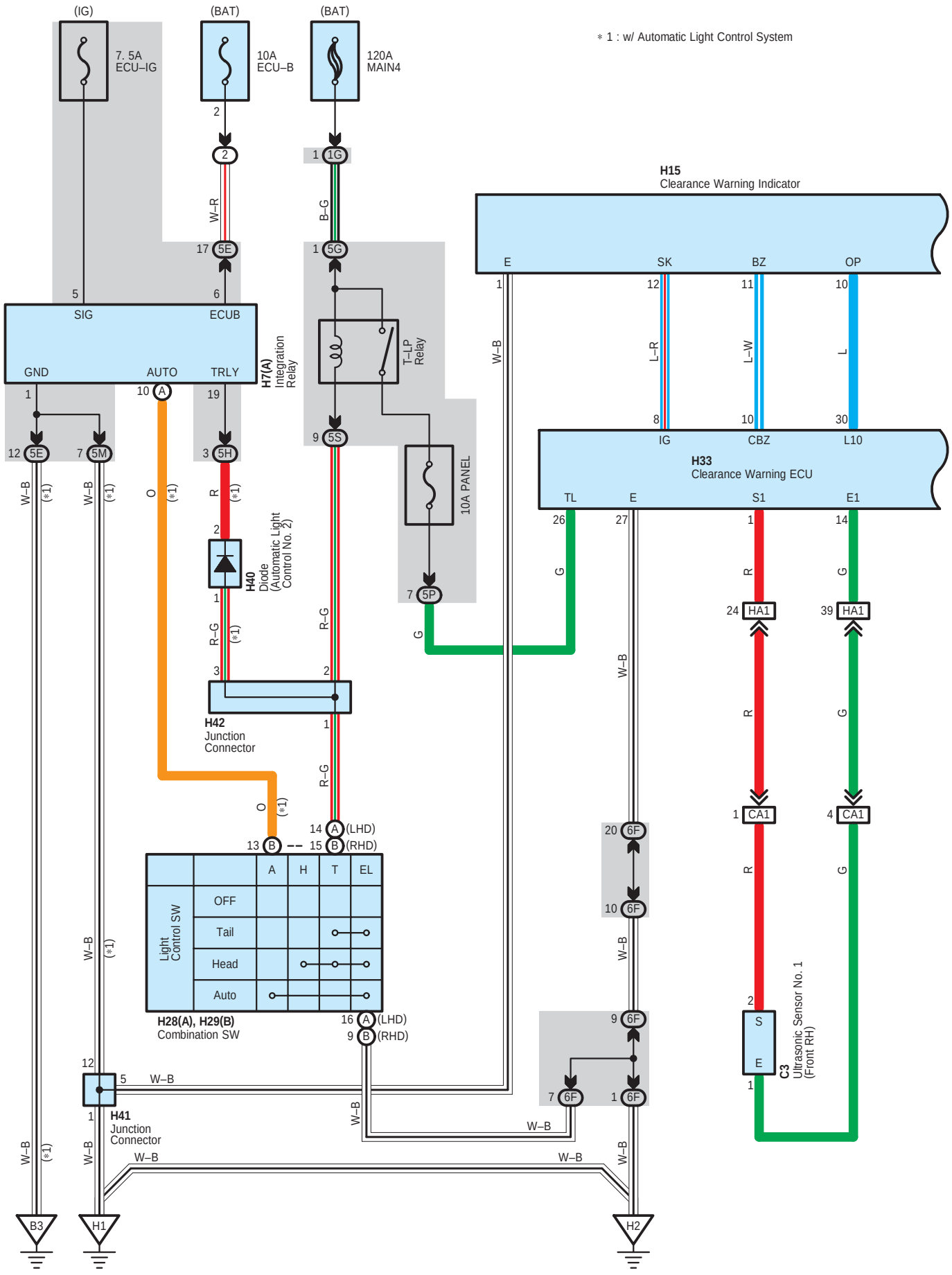
(IG)
7. 5A
ECU–IG
(BAT)
10A
ECU–B
(BAT)
120A
MAIN4
* 1 : w/ Automatic Light Control System
H15
Clearance Warning Indicator
E
SK
BZ
OP
SIG
ECUB
GND
AUTO
TRLY
H7(A)
Integration
Relay
T–LP
Relay
10A PANEL
IG
CBZ
L10
H33
Clearance Warning ECU
TL
E
S1
E1
H40
Diode
(Automatic Light
Control No. 2)
H42
Junction
Connector
(LHD)
(RHD)
Light
Control SW
OFF
Tail
Head
Auto
A
H
T
EL
H28(A), H29(B)
Combination SW
H41
Junction
Connector
C3
Ultrasonic Sensor No. 1
(Front RH)
B3
H1
H2

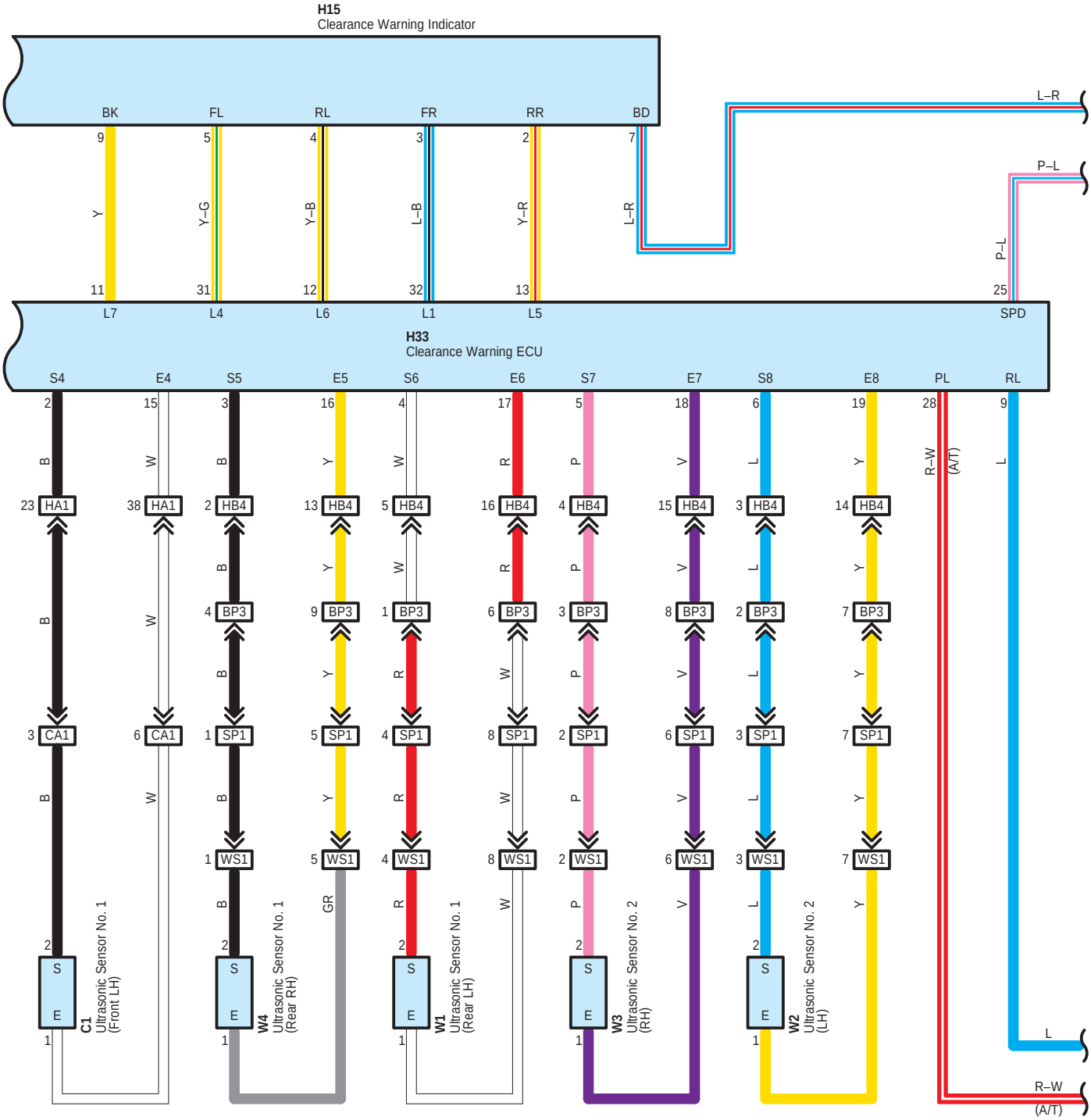
H15
Clearance Warning Indicator
BK
FL
RL
FR
RR
BD
9
5
4
3
2
7
Y
Y–G
Y–B
L–B
Y–R
L–R
11
31
12
32
13
L7
L4
L6
L1
L5
L–R
P–L
P–L
25
SPD
H33
Clearance Warning ECU
S4
E4
S5
E5
S6
E6
S7
E7
S8
E8
PL
RL
2
15
3
16
4
17
5
18
6
19
28
9
B
W
B
Y
W
R
P
V
L
Y
R–W
(A/T)
L
23
HA1
38
HA1
2
HB4
13
HB4
5
HB4
16
HB4
4
HB4
15
HB4
3
HB4
14
HB4
4
BP3
9
BP3
1
BP3
6
BP3
3
BP3
8
BP3
2
BP3
7
BP3
3
CA1
6
CA1
1
SP1
5
SP1
4
SP1
8
SP1
2
SP1
6
SP1
3
SP1
7
SP1
1
WS1
5
WS1
4
WS1
8
WS1
2
WS1
6
WS1
3
WS1
7
WS1
GR
2
S
E
1
C1
Ultrasonic Sensor No. 1
(Front LH)
W4
Ultrasonic Sensor No. 1
(Rear RH)
W1
Ultrasonic Sensor No. 1
(Rear LH)
W3
Ultrasonic Sensor No. 2
(RH)
W2
Ultrasonic Sensor No. 2
(LH)
L
R–W
(A/T)

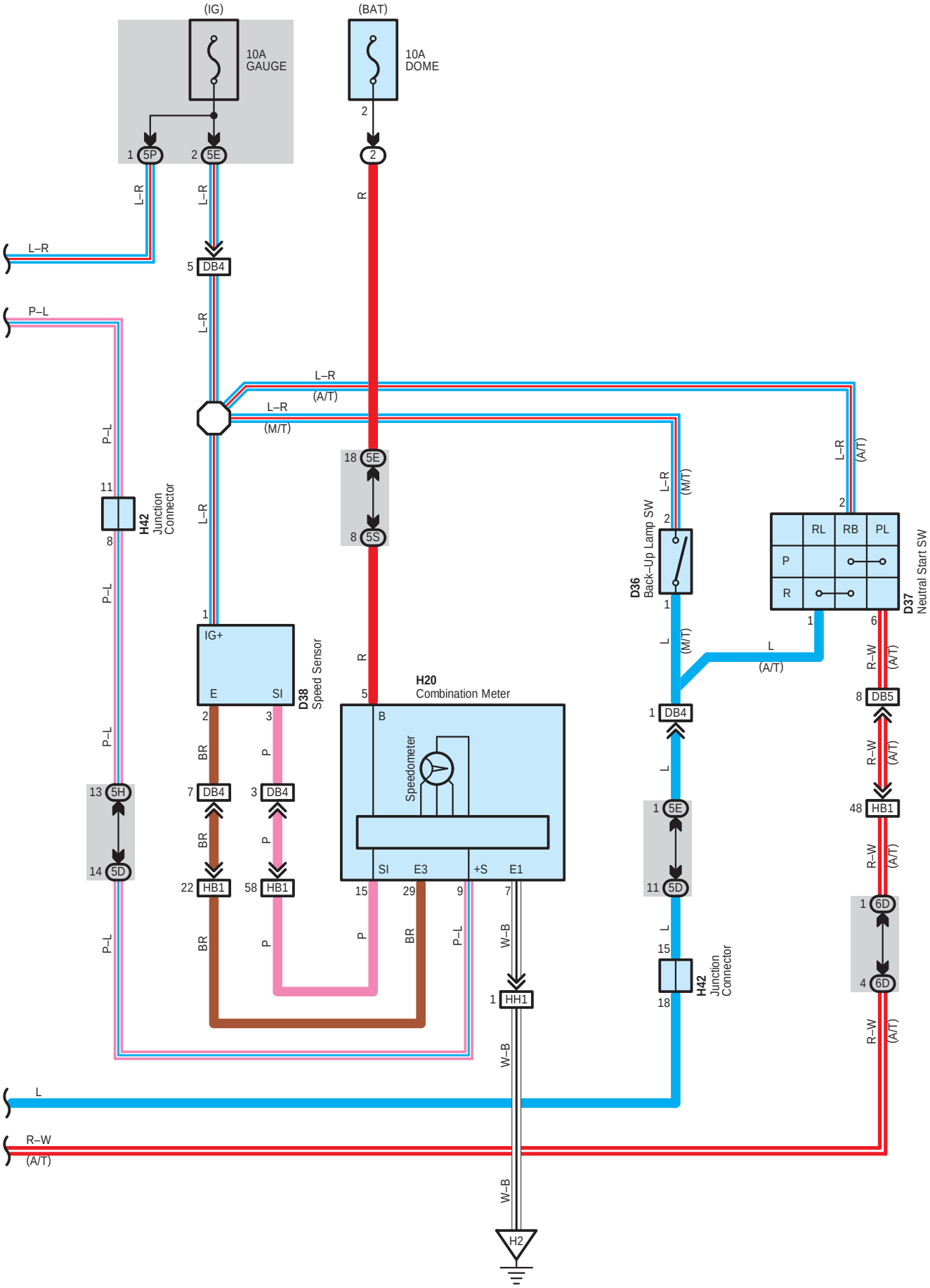
(IG)
10A
GAUGE
(BAT)
10A
DOME
5P
5E
2
L–R
R
DB4
P–L
(A/T)
(M/T)
H42
Junction
Connector
5S
D36
Back–Up Lamp SW
D37
Neutral Start SW
RL
RB
PL
P
R
IG+
E
SI
D38
Speed Sensor
H20
Combination Meter
B
Speedometer
SI
E3
+S
E1
BR
P
5H
5D
HB1
DB5
6D
HH1
W–B
H2
L
R–W

**System Outline**

The sonar is a warning system with buzzer sound of distance and position of obstacle from the ultrasonic sensor No.1, No.2 which detects obstacles behind the vehicle.

**: Parts Location**

| Code | See Page | Code | See Page | Code | See Page |
|---|---|---|---|---|---|
| C1 | 48 (LHD) | H15 | 49 (LHD) | H42 | 49 (LHD) |
| | 56 (RHD) | | 57 (RHD) | | 57 (RHD) |
| C3 | 48 (LHD) | H20 | 49 (LHD) | W1 | 51 (LHD) |
| | 56 (RHD) | | 57 (RHD) | | 59 (RHD) |
| D36 | 44 (*1) | H28 A | 49 (LHD) | W2 | 51 (LHD) |
| | 52 (*4) | H29 B | 57 (RHD) | | 59 (RHD) |
| D37 | 44 (*1) | H33 | 49 (LHD) | W3 | 51 (LHD) |
| | 52 (*4) | | 57 (RHD) | | 59 (RHD) |
| D38 | 44 (*1) | H40 | 57 (RHD) | W4 | 51 (LHD) |
| | 52 (*4) | H41 | 49 (LHD) | | 59 (RHD) |
| H7 A | 57 (RHD) | | 57 (RHD) | | |

**: Relay Blocks**

| Code | See Page | Relay Blocks (Relay Block Location) |
|---|---|---|
| 2 | 28 | Engine Room R/B No.2 (Inside of Battery Room) |

**: Junction Block and Wire Harness Connector**

| Code | See Page | Junction Block and Wire Harness (Connector Location) |
|---|---|---|
| 1G | 24 | Engine Room Main Wire and Engine Room J/B No.1 (Engine Compartment Front) |
| 5D | 30 | Instrument Panel Wire and Instrument Panel J/B (Left Side of Instrument Panel) |
| 5E | 30 | Engine Room Main Wire and Instrument Panel J/B (Left Side of Instrument Panel) |
| 5G | | |
| 5H | 30 | Instrument Panel Wire and Instrument Panel J/B (Left Side of Instrument Panel) |
| 5M | 31 | |
| 5P | | |
| 5S | | |
| 6D | 38 (LHD) | Instrument Panel Wire and Center J/B (Instrument Panel Reinforcement LH) |
| | 38 (RHD) | Instrument Panel Wire and Center J/B (Instrument Panel Reinforcement RH) |
| 6F | 38 (LHD) | Instrument Panel Wire and Center J/B (Instrument Panel Reinforcement LH) |
| | 38 (RHD) | Instrument Panel Wire and Center J/B (Instrument Panel Reinforcement RH) |

* 1 : LHD 2TR–FE * 2 : LHD 2KD–FTV * 3 : LHD 5L–E * 4 : RHD 2TR–FE * 5 : RHD 2KD–FTV * 6 : RHD 5L–E * 7 : 2TR–FE
* 8 : 2KD–FTV, 5L–E

**: Connector Joining Wire Harness and Wire Harness**

| Code | See Page | Joining Wire Harness and Wire Harness (Connector Location) |
|---|---|---|
| BP3 | 66 (LHD) | Engine Room Main Wire and Frame Wire (Under the Floor Panel) |
| | 74 (RHD) | |
| CA1 | 64 (LHD) | Engine Room No.4 Wire and Cowl to Head Lamp Wire (Dash Panel Left) |
| | 72 (RHD) | |
| DB4 | 60 (*1) | Engine Wire and Engine Room Main Wire (Front Side of Engine Room R/B No.1) |
| | 68 (*4) | |
| DB5 | 60 (*1) | |
| | 68 (*4) | |
| HA1 | 64 (LHD) | Instrument Panel Wire and Cowl to Head Lamp Wire (Under the Instrument Panel J/B) |
| | 72 (RHD) | |
| HB1 | 64 (LHD) | Instrument Panel Wire and Engine Room Main Wire (Under the Instrument Panel J/B) |
| | 72 (RHD) | |
| HB4 | 64 (LHD) | |
| | 72 (RHD) | |
| HH1 | 64 (LHD) | Instrument Panel Wire and Instrument Panel Wire (Near the Steering Column) |
| | 72 (RHD) | Instrument Panel Wire and Instrument Panel Wire (Instrument Panel Reinforcement RH) |
| SP1 | 66 (LHD) | Frame No.3 Wire and Frame Wire (Under the Floor Panel) |
| | 74 (RHD) | |
| WS1 | 66 (LHD) | Luggage Room Wire and Frame No.3 Wire (Inside of Rear Bumper LH Side) |
| | 74 (RHD) | |

**: Ground Points**

| Code | See Page | Ground Points Location |
|---|---|---|
| B3 | 68 (*4) | Front Floor Panel Left |
| H1 | 64 (LHD) | Instrument Panel Reinforcement |
| | 72 (RHD) | |
| H2 | 64 (LHD) | |
| | 72 (RHD) | |

* 1 : LHD 2TR–FE * 2 : LHD 2KD–FTV * 3 : LHD 5L–E * 4 : RHD 2TR–FE * 5 : RHD 2KD–FTV * 6 : RHD 5L–E * 7 : 2TR–FE
* 8 : 2KD–FTV, 5L–E

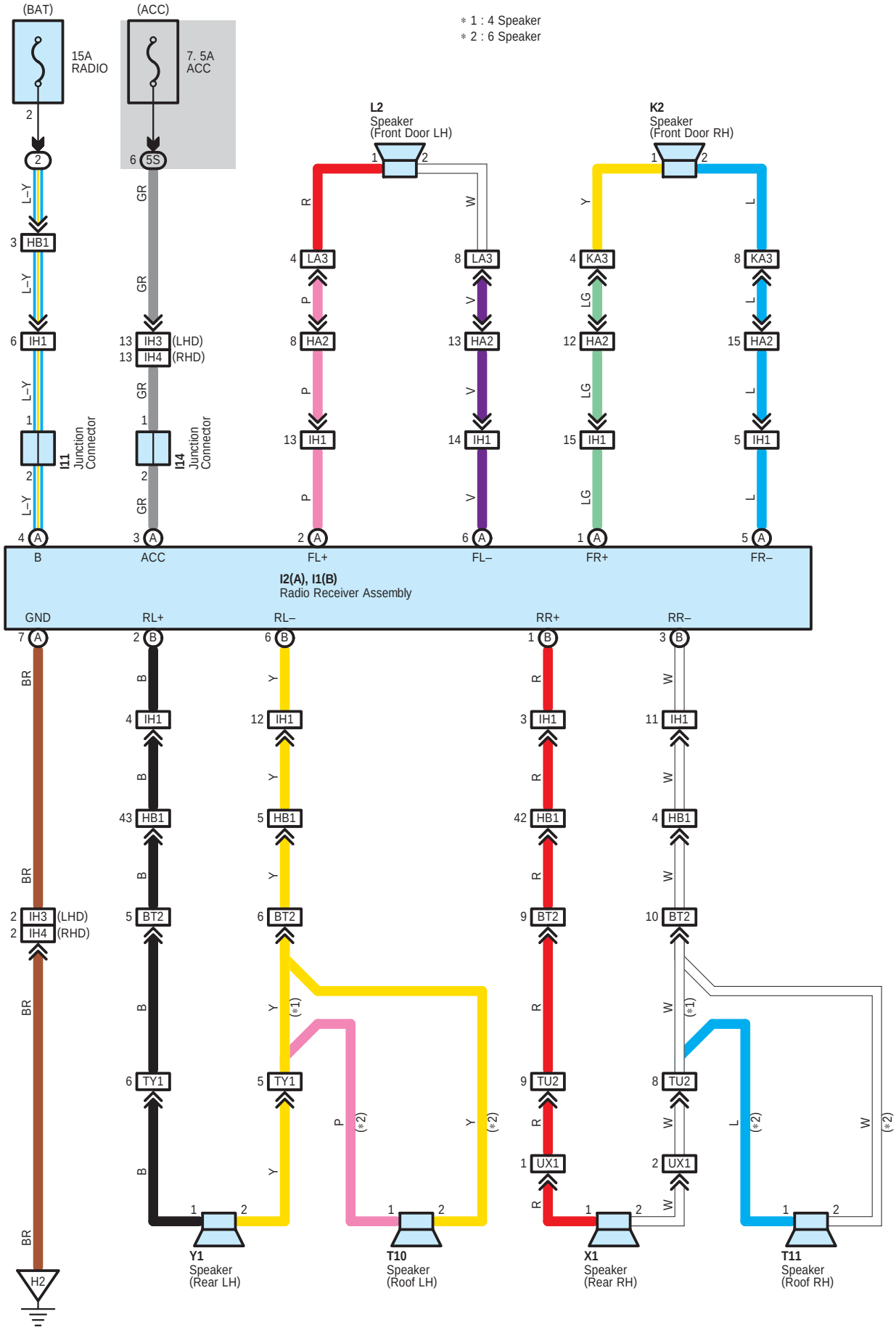
(BAT)
(ACC)
15A
RADIO
7. 5A
ACC
* 1 : 4 Speaker
* 2 : 6 Speaker
L2
Speaker
(Front Door LH)
K2
Speaker
(Front Door RH)
HB1
IH1
IH3 (LHD)
IH4 (RHD)
I11
Junction
Connector
I14
Junction
Connector
LA3
HA2
KA3
B
ACC
FL+
FL–
FR+
FR–
I2(A), I1(B)
Radio Receiver Assembly
GND
RL+
RL–
RR+
RR–
BT2
TY1
TU2
UX1
H2
Y1
Speaker
(Rear LH)
T10
Speaker
(Roof LH)
X1
Speaker
(Rear RH)
T11
Speaker
(Roof RH)

## : Parts Location

| Code | | See Page | Code | See Page | Code | See Page |
|---|---|---|---|---|---|---|
| I1 | B | 48 (LHD) | I14 | 48 (LHD) | T10 | 50 (LHD) |
| | | 56 (RHD) | | 56 (RHD) | T11 | 50 (LHD) |
| I2 | A | 48 (LHD) | K2 | 50 (LHD) | X1 | 51 (LHD) |
| | | 56 (RHD) | | 58 (RHD) | | 59 (RHD) |
| I11 | | 48 (LHD) | L2 | 50 (LHD) | Y1 | 51 (LHD) |
| | | 56 (RHD) | | 58 (RHD) | | 59 (RHD) |

## : Relay Blocks

| Code | See Page | Relay Blocks (Relay Block Location) |
|---|---|---|
| 2 | 28 | Engine Room R/B No.2 (Inside of Battery Room) |

## : Junction Block and Wire Harness Connector

| Code | See Page | Junction Block and Wire Harness (Connector Location) |
|---|---|---|
| 5S | 31 | Instrument Panel Wire and Instrument Panel J/B (Left Side of Instrument Panel) |

## : Connector Joining Wire Harness and Wire Harness

| Code | See Page | Joining Wire Harness and Wire Harness (Connector Location) |
|---|---|---|
| BT2 | 64 (LHD) | Engine Room Main Wire and Roof Wire (Cowl Side Panel LH) |
| | 72 (RHD) | |
| HA2 | 64 (LHD) | Instrument Panel Wire and Cowl to Head Lamp Wire (Under the Instrument Panel J/B) |
| | 72 (RHD) | |
| HB1 | 64 (LHD) | Instrument Panel Wire and Engine Room Main Wire (Under the Instrument Panel J/B) |
| | 72 (RHD) | |
| IH1 | 64 (LHD) | Instrument Panel No.2 Wire and Instrument Panel Wire (Instrument Panel Reinforcement LH) |
| | 72 (RHD) | |
| IH3 | 64 (LHD) | Instrument Panel No.2 Wire and Instrument Panel Wire (Instrument Panel Reinforcement RH) |
| IH4 | 72 (RHD) | |
| KA3 | 65 (LHD) | Front Door RH Wire and Cowl to Head Lamp Wire (Right Kick Panel) |
| | 73 (RHD) | |
| LA3 | 65 (LHD) | Front Door LH Wire and Cowl to Head Lamp Wire (Left Kick Panel) |
| | 73 (RHD) | |
| TU2 | 66 (LHD) | Roof Wire and Roof No.2 Wire (Rear of the Left Side of the Roof Panel) |
| | 74 (RHD) | |
| TY1 | 66 (LHD) | Roof Wire and Luggage Room No.3 Wire (Left Quarter Panel) |
| | 74 (RHD) | |
| UX1 | 66 (LHD) | Roof No.2 Wire and Luggage Room No.2 Wire (Right Quarter Panel) |
| | 74 (RHD) | |

## : Ground Points

| Code | See Page | Ground Points Location |
|---|---|---|
| H2 | 64 (LHD) | Instrument Panel Reinforcement |
| | 72 (RHD) | |

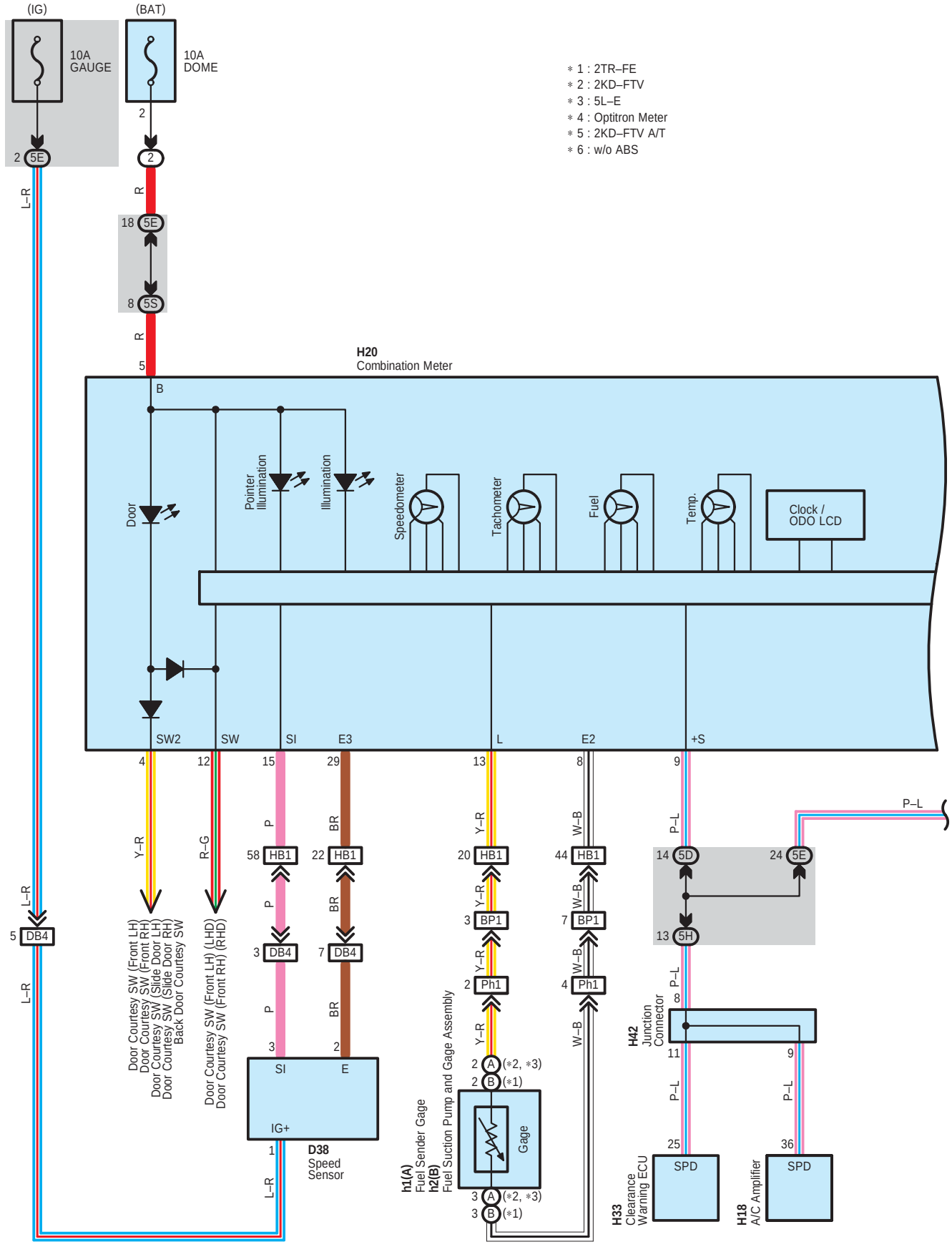
(IG)
(BAT)
10A GAUGE
10A DOME
* 1 : 2TR–FE
* 2 : 2KD–FTV
* 3 : 5L–E
* 4 : Optitron Meter
* 5 : 2KD–FTV A/T
* 6 : w/o ABS
H20
Combination Meter
Door
Pointer Illumination
Illumination
Speedometer
Tachometer
Fuel
Temp.
Clock / ODO LCD
SW2
SW
SI
E3
L
E2
+S
Door Courtesy SW (Front LH)
Door Courtesy SW (Front RH)
Door Courtesy SW (Slide Door LH)
Door Courtesy SW (Slide Door RH)
Back Door Courtesy SW
Door Courtesy SW (Front LH) (LHD)
Door Courtesy SW (Front RH) (RHD)
D38
Speed Sensor
h1(A)
Fuel Sender Gage
h2(B)
Fuel Suction Pump and Gage Assembly
Gage
H42
Junction Connector
H33
Clearance Warning ECU
H18
A/C Amplifier
SPD
IG+
P–L

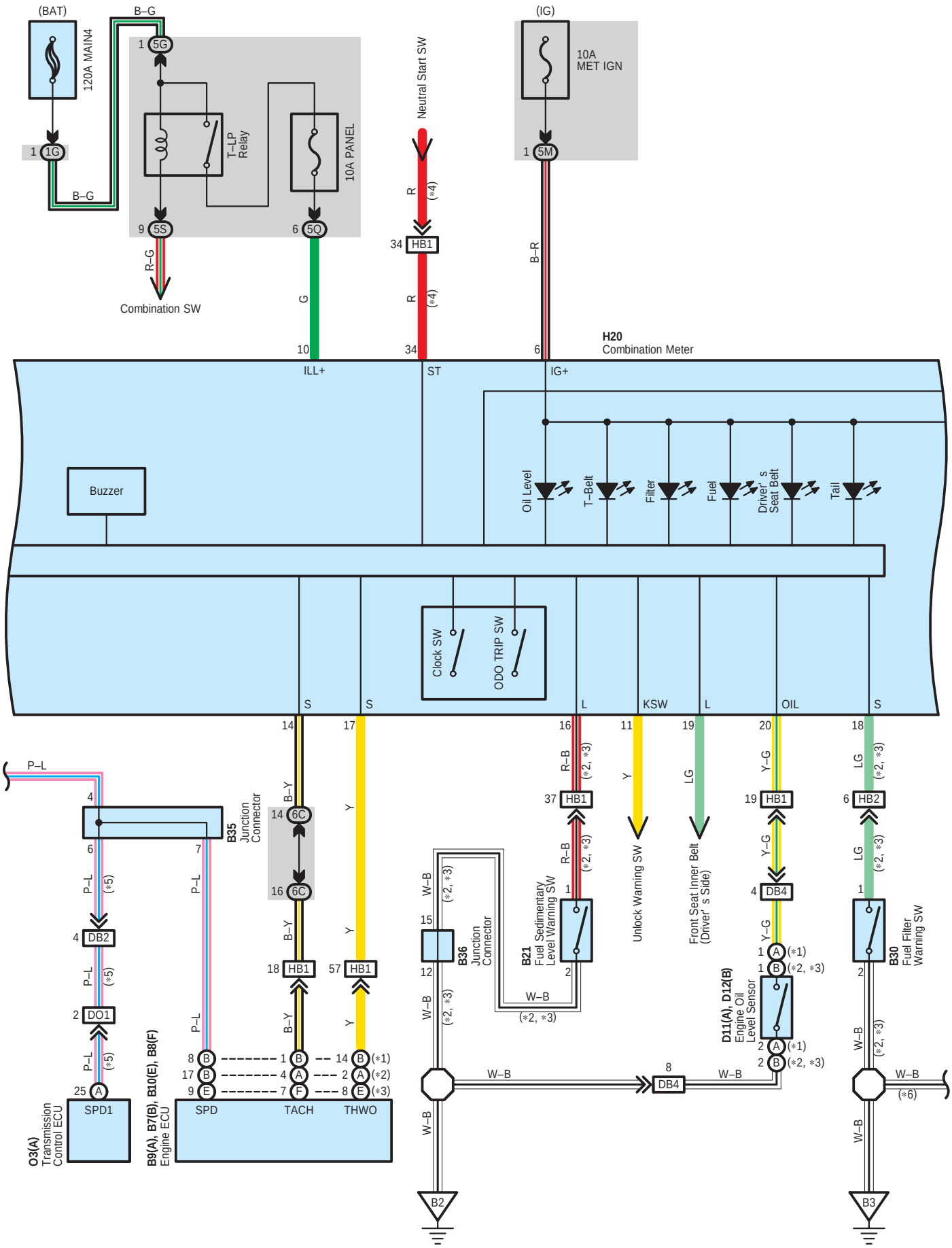
(BAT)
B–G
120A MAIN4
1 5G
1 1G
B–G
T–LP Relay
10A PANEL
9 5S
6 5Q
R–G
Combination SW
G
10
ILL+
Neutral Start SW
R
(*4)
34 HB1
R
(*4)
34
ST
(IG)
10A MET IGN
1 5M
B–R
6
IG+
H20
Combination Meter
Buzzer
Oil Level
T–Belt
Filter
Fuel
Driver' s Seat Belt
Tail
Clock SW
ODO TRIP SW
S
S
L
KSW
L
OIL
S
14
17
16
11
19
20
18
P–L
4
6
7
B35
Junction Connector
B–Y
14 6C
16 6C
Y
18 HB1
57 HB1
R–B
(*2, *3)
37 HB1
Y
Unlock Warning SW
LG
Front Seat Inner Belt (Driver' s Side)
Y–G
19 HB1
4 DB4
LG
(*2, *3)
6 HB2
1
B21
Fuel Sedimentary Level Warning SW
2
W–B
15
12
B36
Junction Connector
1 A (*1)
1 B (*2, *3)
2 A (*1)
2 B (*2, *3)
D11(A), D12(B)
Engine Oil Level Sensor
B30
Fuel Filter Warning SW
4 DB2
2 DO1
25 A
(*5)
O3(A)
Transmission Control ECU
SPD1
8 B
17 B
9 E
1 B
4 A
7 F
14 B (*1)
2 A (*2)
8 B (*3)
B9(A), B7(B), B10(E), B8(F)
Engine ECU
SPD
TACH
THWO
8
DB4
W–B
(*6)
B2
B3

∗ 1 : 2TR–FE
∗ 2 : 2KD–FTV
∗ 3 : 5L–E
∗ 6 : w/o ABS

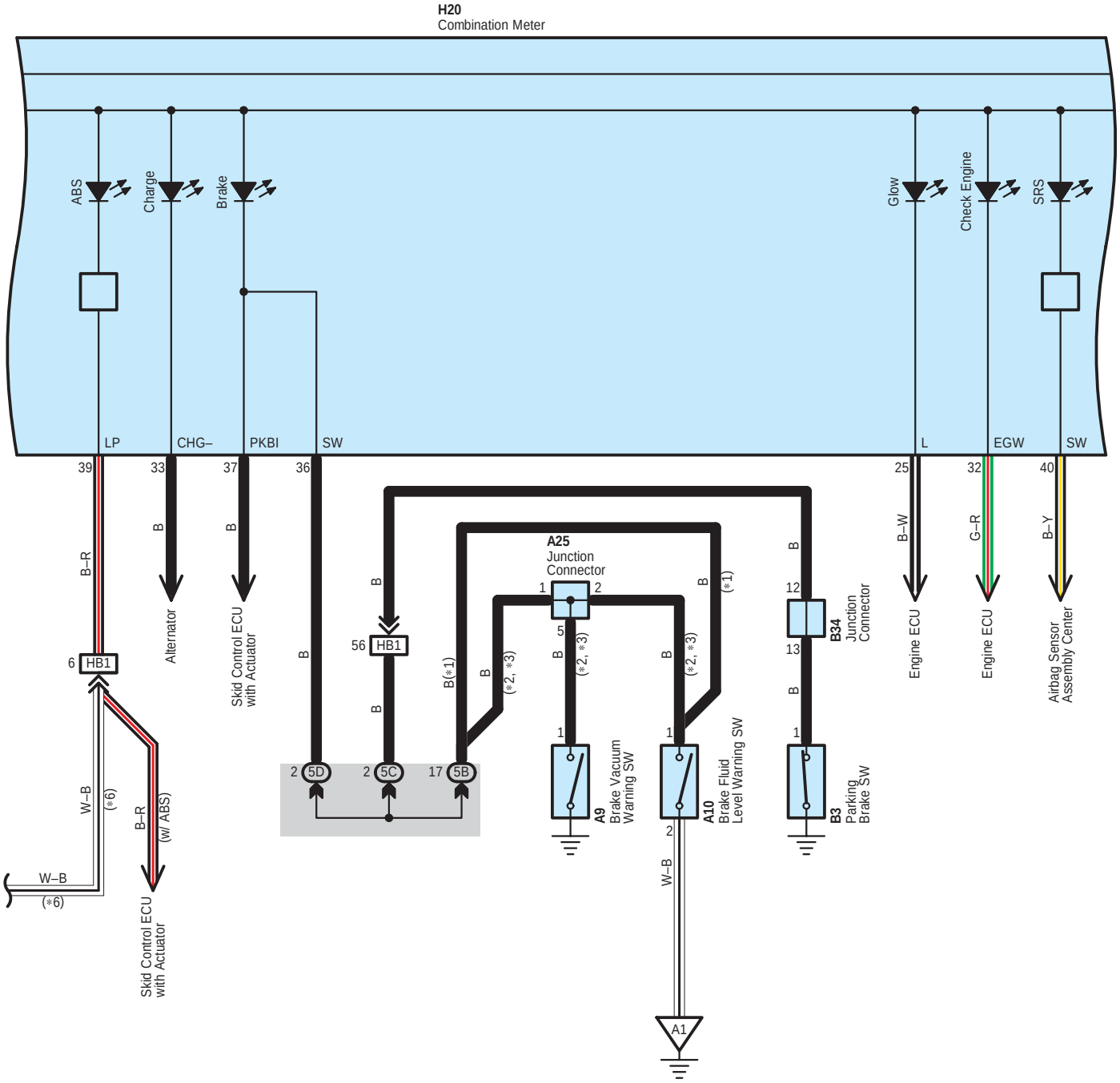

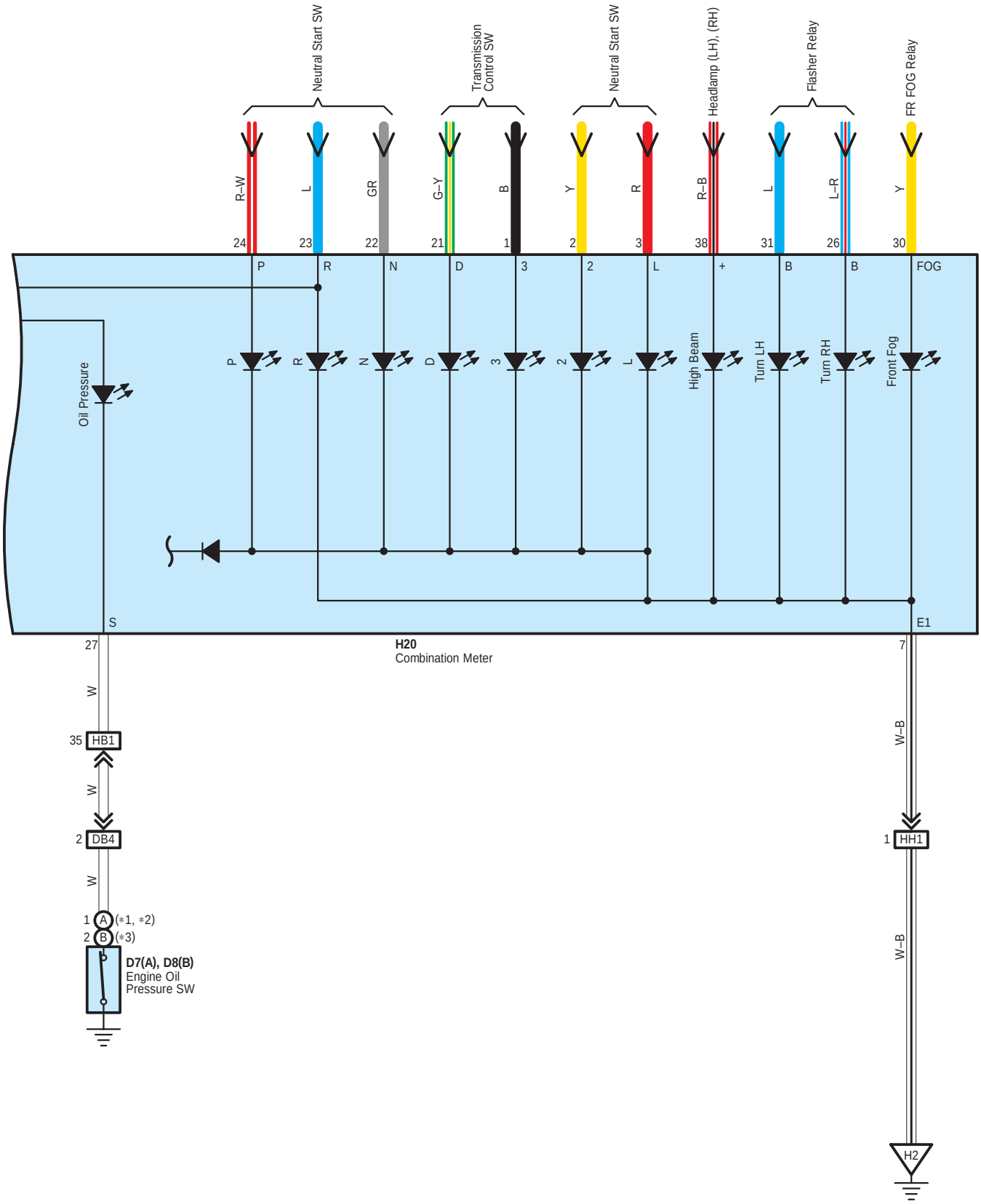
Neutral Start SW
Transmission Control SW
Neutral Start SW
Headlamp (LH), (RH)
Flasher Relay
FR FOG Relay
R–W
L
GR
G–Y
B
Y
R
R–B
L
L–R
Y
24
23
22
21
1
2
3
38
31
26
30
P
R
N
D
3
2
L
+
B
B
FOG
Oil Pressure
High Beam
Turn LH
Turn RH
Front Fog
S
E1
27
W
35 HB1
W
2 DB4
W
1 A (*1, *2)
2 B (*3)
D7(A), D8(B)
Engine Oil
Pressure SW
H20
Combination Meter
7
W–B
1 HH1
W–B
H2

# Combination Meter and Clock

**: Parts Location**

| Code | See Page | Code | See Page | Code | See Page |
|---|---|---|---|---|---|
| A9 | 48 (LHD) | B30 | 53 (*5) | D12 B | 53 (*5) |
| | 56 (RHD) | | 54 (*6) | | 54 (*6) |
| A10 | 48 (LHD) | B34 | 48 (LHD) | D38 | 44 (*1) |
| | 56 (RHD) | | 56 (RHD) | | 45 (*2) |
| A25 | 48 (LHD) | B35 | 44 (*1) | | 46 (*3) |
| | 56 (RHD) | | 45 (*2) | | 52 (*4) |
| B3 | 48 (LHD) | | 46 (*3) | | 53 (*5) |
| | 56 (RHD) | | 52 (*4) | | 54 (*6) |
| B7 B | 44 (*1) | | 53 (*5) | H18 | 49 (LHD) |
| | 45 (*2) | | 54 (*6) | | 57 (RHD) |
| | 52 (*4) | B36 | 45 (*2) | H20 | 49 (LHD) |
| | 53 (*5) | | 46 (*3) | | 57 (RHD) |
| B8 F | 46 (*3) | | 53 (*5) | H33 | 49 (LHD) |
| | 54 (*6) | | 54 (*6) | | 57 (RHD) |
| B9 A | 45 (*2) | D7 A | 44 (*1) | H42 | 49 (LHD) |
| | 53 (*5) | | 45 (*2) | | 57 (RHD) |
| B10 E | 46 (*3) | | 52 (*4) | O3 A | 48 (LHD) |
| | 54 (*6) | | 53 (*5) | | 56 (RHD) |
| B21 | 45 (*2) | D8 B | 46 (*3) | h1 A | 51 (LHD) |
| | 46 (*3) | | 54 (*6) | | 59 (RHD) |
| | 53 (*5) | D11 A | 44 (*1) | h2 B | 51 (LHD) |
| | 54 (*6) | | 52 (*4) | | 59 (RHD) |
| B30 | 45 (*2) | D12 B | 45 (*2) | | |
| | 46 (*3) | | 46 (*3) | | |

**: Relay Blocks**

| Code | See Page | Relay Blocks (Relay Block Location) |
|---|---|---|
| 2 | 28 | Engine Room R/B No.2 (Inside of Battery Room) |

**: Junction Block and Wire Harness Connector**

| Code | See Page | Junction Block and Wire Harness (Connector Location) |
|---|---|---|
| 1G | 24 | Engine Room Main Wire and Engine Room J/B No.1 (Engine Compartment Front) |
| 5B | 30 | Cowl to Head Lamp Wire and Instrument Panel J/B (Left Side of Instrument Panel) |
| 5C | 30 | Instrument Panel Wire and Instrument Panel J/B (Left Side of Instrument Panel) |
| 5D | | |
| 5E | 30 | Engine Room Main Wire and Instrument Panel J/B (Left Side of Instrument Panel) |
| 5G | | |
| 5H | 30 | Instrument Panel Wire and Instrument Panel J/B (Left Side of Instrument Panel) |
| 5M | 31 | |
| 5Q | | |
| 5S | | |
| 6C | 38 (LHD) | Instrument Panel Wire and Center J/B (Instrument Panel Reinforcement LH) |
| | 38 (RHD) | Instrument Panel Wire and Center J/B (Instrument Panel Reinforcement RH) |

* 1 : LHD 2TR–FE * 2 : LHD 2KD–FTV * 3 : LHD 5L–E * 4 : RHD 2TR–FE * 5 : RHD 2KD–FTV * 6 : RHD 5L–E * 7 : 2TR–FE
* 8 : 2KD–FTV, 5L–E

**: Connector Joining Wire Harness and Wire Harness**

| Code | See Page | Joining Wire Harness and Wire Harness (Connector Location) |
|---|---|---|
| BP1 | 66 (LHD) | Engine Room Main Wire and Frame Wire (Under the Floor Panel) |
| | 74 (RHD) | |
| DB2 | 61 (*2) | Engine Wire and Engine Room Main Wire (Front Side of Engine Room R/B No.1) |
| | 69 (*5) | |
| DB4 | 60 (*1) | |
| | 61 (*2) | |
| | 62 (*3) | |
| | 68 (*4) | |
| | 69 (*5) | |
| | 70 (*6) | |
| DO1 | 61 (*2) | Engine Wire and Floor Wire (Front Floor Panel Right) |
| | 69 (*5) | |
| HB1 | 64 (LHD) | Instrument Panel Wire and Engine Room Main Wire (Under the Instrument Panel J/B) |
| | 72 (RHD) | |
| HB2 | 64 (LHD) | |
| | 72 (RHD) | |
| HH1 | 64 (LHD) | Instrument Panel Wire and Instrument Panel Wire (Near the Steering Column) |
| | 72 (RHD) | Instrument Panel Wire and Instrument Panel Wire (Instrument Panel Reinforcement RH) |
| Ph1 | 66 (LHD) | Frame Wire and Fuel Tank Wire (Near the Fuel Tank) |
| | 74 (RHD) | |

**: Ground Points**

| Code | See Page | Ground Points Location |
|---|---|---|
| A1 | 64 (LHD) | Dash Panel Right |
| | 72 (RHD) | |
| B2 | 60 (*1) | Front Floor Panel Right |
| | 61 (*2) | |
| | 62 (*3) | |
| | 68 (*4) | |
| | 69 (*5) | |
| | 70 (*6) | |
| B3 | 60 (*1) | Front Floor Panel Left |
| | 61 (*2) | |
| | 62 (*3) | |
| | 68 (*4) | |
| | 69 (*5) | |
| | 70 (*6) | |
| H2 | 64 (LHD) | Instrument Panel Reinforcement |
| | 72 (RHD) | |

* 1 : LHD 2TR–FE * 2 : LHD 2KD–FTV * 3 : LHD 5L–E * 4 : RHD 2TR–FE * 5 : RHD 2KD–FTV * 6 : RHD 5L–E * 7 : 2TR–FE
* 8 : 2KD–FTV, 5L–E

# Cooling Fan (2TR–FE, 2KD–FTV)

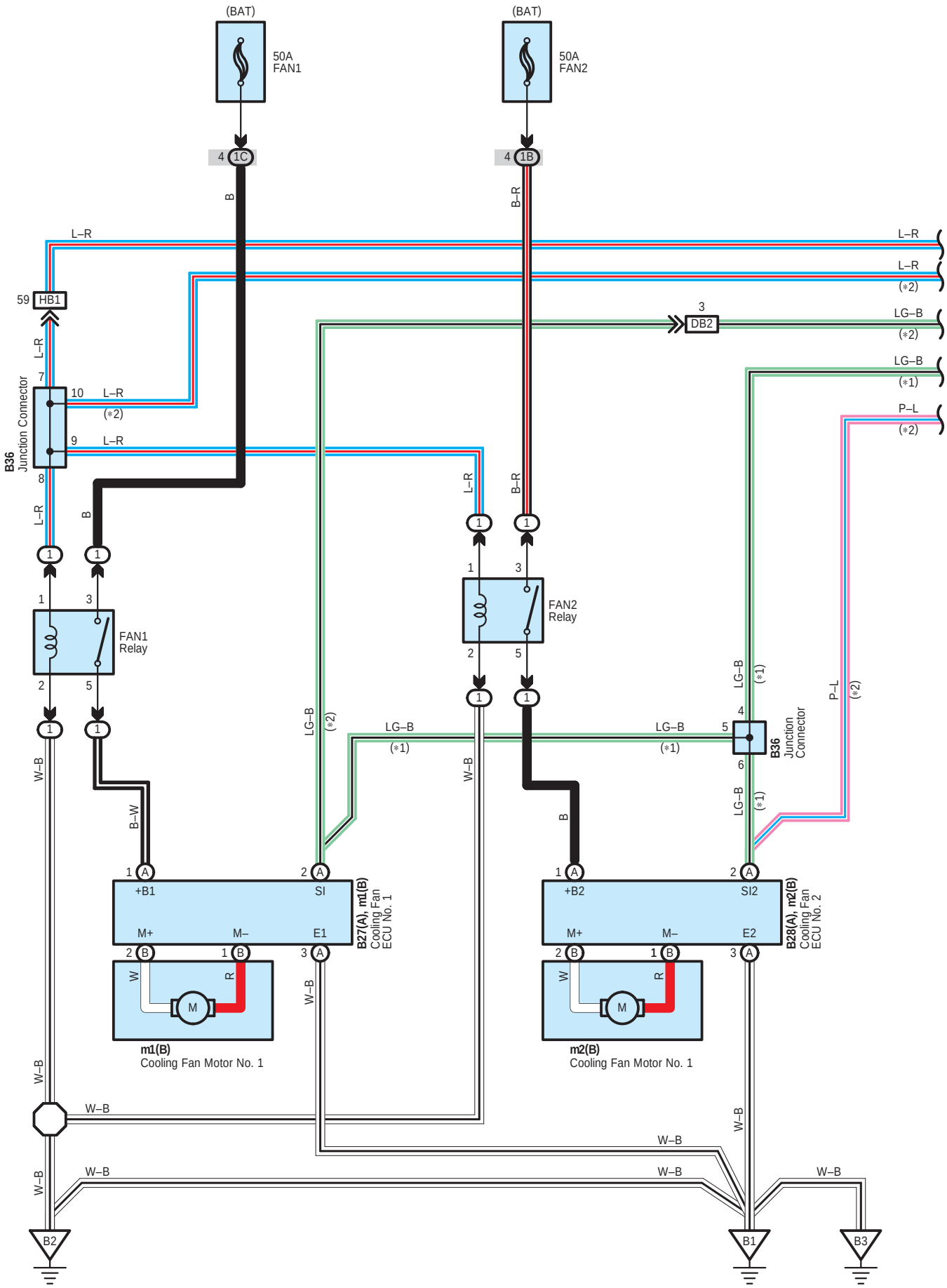

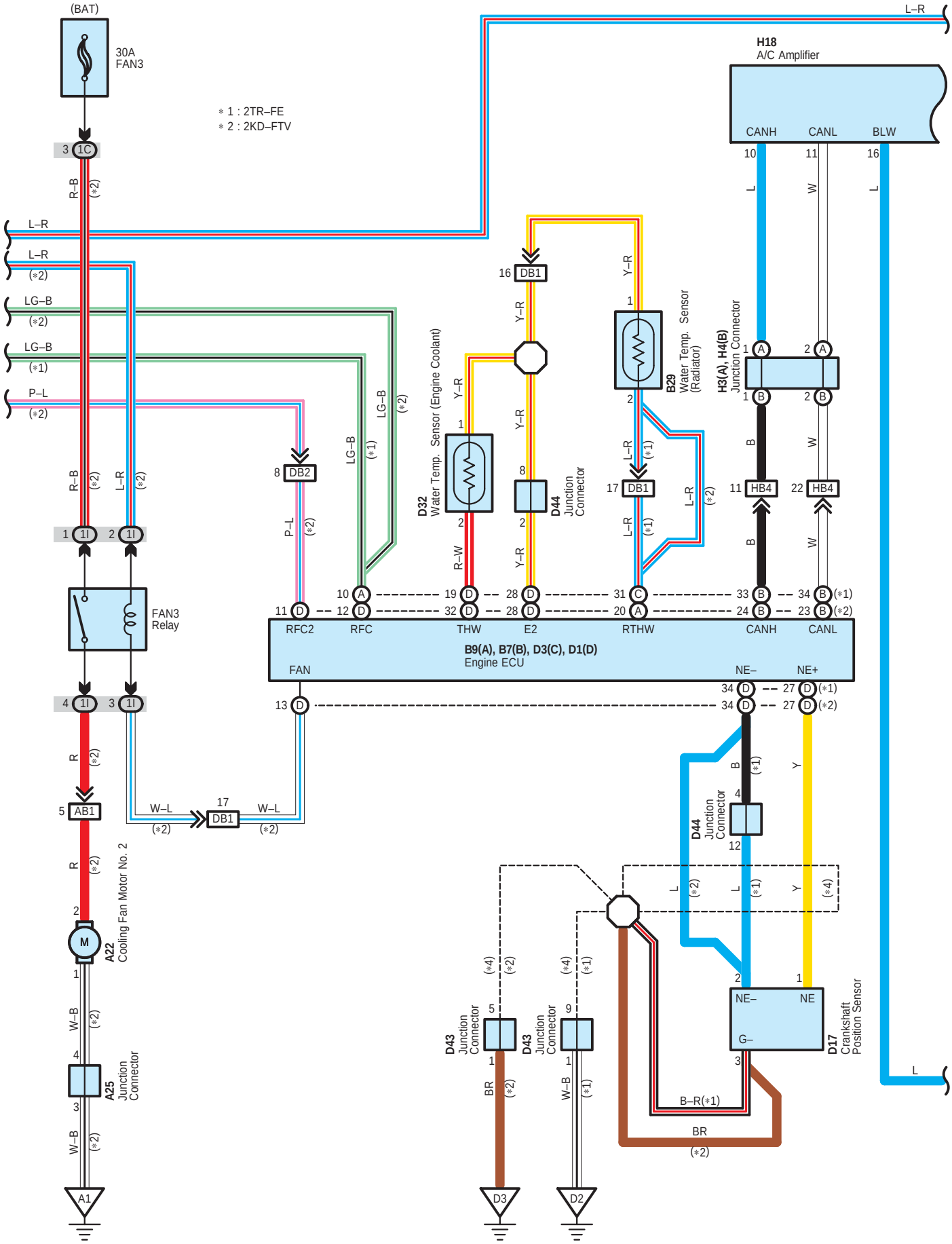
(BAT)
30A
FAN3
∗ 1 : 2TR–FE
∗ 2 : 2KD–FTV
H18
A/C Amplifier
CANH
CANL
BLW
L–R
L–R
(∗2)
LG–B
(∗2)
LG–B
(∗1)
P–L
(∗2)
R–B
(∗2)
L–R
(∗2)
LG–B
(∗1)
LG–B
(∗2)
DB1
DB2
Y–R
D32
Water Temp. Sensor (Engine Coolant)
D44
Junction Connector
B29
Water Temp. Sensor
(Radiator)
H3(A), H4(B)
Junction Connector
HB4
FAN3
Relay
RFC2
RFC
THW
E2
RTHW
CANH
CANL
B9(A), B7(B), D3(C), D1(D)
Engine ECU
FAN
NE–
NE+
AB1
W–L
(∗2)
DB1
W–L
(∗2)
A22
Cooling Fan Motor No. 2
A25
Junction Connector
A1
D43
Junction Connector
D43
Junction Connector
D44
Junction Connector
NE–
NE
G–
D17
Crankshaft
Position Sensor
B–R(∗1)
BR
(∗2)
D3
D2

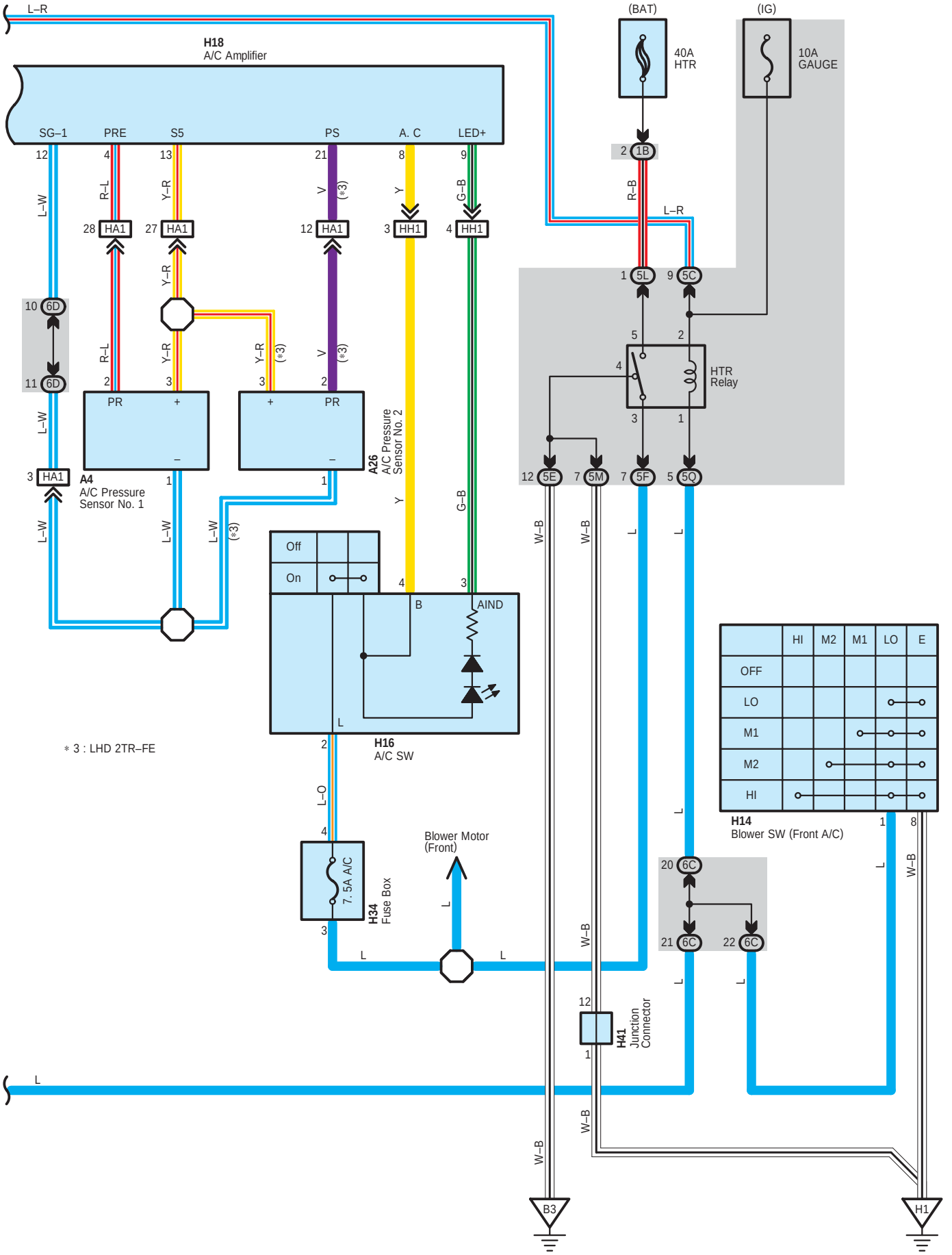
L–R
H18
A/C Amplifier
SG–1
PRE
S5
PS
A. C
LED+
(BAT)
(IG)
40A
HTR
10A
GAUGE
HTR
Relay
A4
A/C Pressure
Sensor No. 1
A26
A/C Pressure
Sensor No. 2
Off
On
AIND
H16
A/C SW
∗ 3 : LHD 2TR–FE
H14
Blower SW (Front A/C)
HI
M2
M1
LO
E
OFF
H34
Fuse Box
7. 5A A/C
Blower Motor
(Front)
H41
Junction
Connector
B3
H1

**System Outline**

**System Operation**

If the ignition SW is turned to ON, the current from the GAUGE fuse is sent to the coil side and the FAN1, FAN2, FAN3 relay is turned to ON. Then the current flows to TERMINAL (A) 1 of the cooling fan ECU No.1, No.2. At the same time, the conditions of the A/C SW, A/C pressure sensor, water temp. sensor and engine rotation are sent to the TERMINAL (A) 2 as signals from the TERMINAL RFC of the engine ECU. As a result of that, the cooling fan ECU No.1, No.2 continuously controls the rotation of the fan motor and keeps a balance between the cooling efficiency and silentness with the optimal fan rotation.

**○ : Parts Location**

| Code | | See Page |
|---|---|---|
| A4 | | 48 (LHD) |
| | | 56 (RHD) |
| A22 | | 48 (LHD) |
| | | 56 (RHD) |
| A25 | | 48 (LHD) |
| | | 56 (RHD) |
| A26 | | 48 (LHD) |
| B7 | B | 44 (*1) |
| | | 45 (*2) |
| | | 52 (*4) |
| | | 53 (*5) |
| B9 | A | 44 (*1) |
| | | 45 (*2) |
| | | 52 (*4) |
| | | 53 (*5) |
| B27 | A | 44 (*1) |
| | | 45 (*2) |
| | | 52 (*4) |
| | | 53 (*5) |
| B28 | A | 44 (*1) |
| | | 45 (*2) |
| | | 52 (*4) |
| | | 53 (*5) |
| B29 | | 44 (*1) |
| | | 45 (*2) |
| B29 | | 52 (*4) |
| | | 53 (*5) |
| B36 | | 44 (*1) |
| | | 45 (*2) |
| | | 52 (*4) |
| | | 53 (*5) |
| D1 | D | 44 (*1) |
| | | 45 (*2) |
| | | 52 (*4) |
| | | 53 (*5) |
| D3 | C | 44 (*1) |
| | | 52 (*4) |
| D17 | | 44 (*1) |
| | | 45 (*2) |
| | | 52 (*4) |
| | | 53 (*5) |
| D32 | | 44 (*1) |
| | | 45 (*2) |
| | | 52 (*4) |
| | | 53 (*5) |
| D43 | | 44 (*1) |
| | | 45 (*2) |
| | | 52 (*4) |
| | | 53 (*5) |
| D44 | | 44 (*1) |
| D44 | | 45 (*2) |
| | | 52 (*4) |
| | | 53 (*5) |
| H3 | A | 42, 49 (LHD) |
| | | 42, 57 (RHD) |
| H4 | B | 42, 49 (LHD) |
| | | 42, 57 (RHD) |
| H14 | | 49 (LHD) |
| | | 57 (RHD) |
| H16 | | 49 (LHD) |
| | | 57 (RHD) |
| H18 | | 49 (LHD) |
| | | 57 (RHD) |
| H34 | | 49 (LHD) |
| | | 57 (RHD) |
| H41 | | 49 (LHD) |
| | | 57 (RHD) |
| m1 | B | 44 (*1) |
| | | 45 (*2) |
| | | 52 (*4) |
| | | 53 (*5) |
| m2 | B | 44 (*1) |
| | | 45 (*2) |
| | | 52 (*4) |
| | | 53 (*5) |

**⬭ : Relay Blocks**

| Code | See Page | Relay Blocks (Relay Block Location) |
|---|---|---|
| 1 | 22 (*7) | Engine Room R/B No.1 (Engine Compartment Front) |
| | 23 (*8) | |

* 1 : LHD 2TR–FE * 2 : LHD 2KD–FTV * 3 : LHD 5L–E * 4 : RHD 2TR–FE * 5 : RHD 2KD–FTV * 6 : RHD 5L–E * 7 : 2TR–FE
* 8 : 2KD–FTV, 5L–E

# Cooling Fan (2TR–FE, 2KD–FTV)

**: Junction Block and Wire Harness Connector**

| Code | See Page | Junction Block and Wire Harness (Connector Location) |
|---|---|---|
| 1B | 24 | Engine Room Main Wire and Engine Room J/B No.1 (Engine Compartment Front) |
| 1C | | |
| 1I | 25 | |
| 5C | 30 | Instrument Panel Wire and Instrument Panel J/B (Left Side of Instrument Panel) |
| 5E | 30 | Engine Room Main Wire and Instrument Panel J/B (Left Side of Instrument Panel) |
| 5F | 30 | Instrument Panel Wire and Instrument Panel J/B (Left Side of Instrument Panel) |
| 5L | 30 | Engine Room Main Wire and Instrument Panel J/B (Left Side of Instrument Panel) |
| 5M | 31 | Instrument Panel Wire and Instrument Panel J/B (Left Side of Instrument Panel) |
| 5Q | | |
| 6C | 38 (LHD) | Instrument Panel Wire and Center J/B (Instrument Panel Reinforcement LH) |
| | 38 (RHD) | Instrument Panel Wire and Center J/B (Instrument Panel Reinforcement RH) |
| 6D | 38 (LHD) | Instrument Panel Wire and Center J/B (Instrument Panel Reinforcement LH) |
| | 38 (RHD) | Instrument Panel Wire and Center J/B (Instrument Panel Reinforcement RH) |

**: Connector Joining Wire Harness and Wire Harness**

| Code | See Page | Joining Wire Harness and Wire Harness (Connector Location) |
|---|---|---|
| AB1 | 64 (LHD) | Cowl to Head Lamp Wire and Engine Room Main Wire (Left Side of the Instrument Panel J/B) |
| | 72 (RHD) | |
| DB1 | 60 (*1) | Engine Wire and Engine Room Main Wire (Front Side of Engine Room R/B No.1) |
| | 61 (*2) | |
| | 68 (*4) | |
| | 69 (*5) | |
| DB2 | 61 (*2) | |
| | 69 (*5) | |
| HA1 | 64 (LHD) | Instrument Panel Wire and Cowl to Head Lamp Wire (Under the Instrument Panel J/B) |
| | 72 (RHD) | |
| HB1 | 64 (LHD) | Instrument Panel Wire and Engine Room Main Wire (Under the Instrument Panel J/B) |
| | 72 (RHD) | |
| HB4 | 64 (LHD) | |
| | 72 (RHD) | |
| HH1 | 64 (LHD) | Instrument Panel Wire and Instrument Panel Wire (Near the Steering Column) |
| | 72 (RHD) | Instrument Panel Wire and Instrument Panel Wire (Instrument Panel Reinforcement RH) |

* 1 : LHD 2TR–FE * 2 : LHD 2KD–FTV * 3 : LHD 5L–E * 4 : RHD 2TR–FE * 5 : RHD 2KD–FTV * 6 : RHD 5L–E * 7 : 2TR–FE
* 8 : 2KD–FTV, 5L–E

▽ : **Ground Points**

| Code | See Page | Ground Points Location |
|---|---|---|
| A1 | 64 (LHD) | Dash Panel Right |
| | 72 (RHD) | |
| B1 | 60 (*1) | Front Floor Panel Right |
| | 61 (*2) | |
| | 68 (*4) | |
| | 69 (*5) | |
| B2 | 60 (*1) | |
| | 61 (*2) | |
| | 68 (*4) | |
| | 69 (*5) | |
| B3 | 60 (*1) | Front Floor Panel Left |
| | 61 (*2) | |
| | 68 (*4) | |
| | 69 (*5) | |
| D2 | 60 (*1) | Engine Block |
| | 68 (*4) | |
| D3 | 61 (*2) | |
| | 69 (*5) | |
| H1 | 64 (LHD) | Instrument Panel Reinforcement |
| | 72 (RHD) | |

* 1 : LHD 2TR–FE * 2 : LHD 2KD–FTV * 3 : LHD 5L–E * 4 : RHD 2TR–FE * 5 : RHD 2KD–FTV * 6 : RHD 5L–E * 7 : 2TR–FE
* 8 : 2KD–FTV, 5L–E

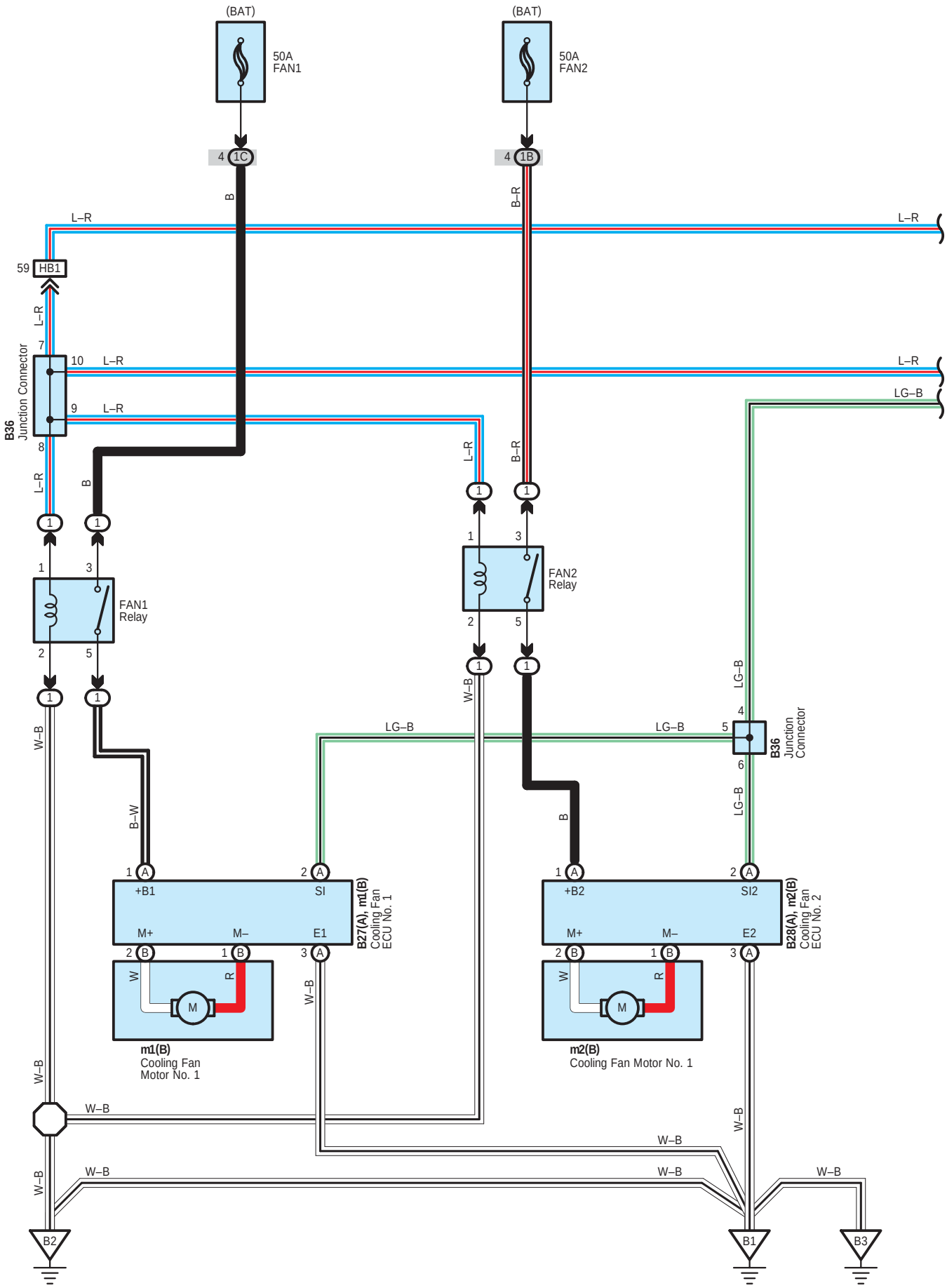
(BAT)
50A
FAN1
(BAT)
50A
FAN2
4 1C
4 1B
B
B–R
L–R
L–R
59 HB1
L–R
7
10 L–R
L–R
9 L–R
LG–B
B36
Junction Connector
8
L–R
B
L–R
B–R
1
1
1
3
FAN1
Relay
FAN2
Relay
2
5
1
1
W–B
LG–B
LG–B
LG–B
4
5
B36
Junction
Connector
6
LG–B
B–W
B
1 A
2 A
+B1
SI
M+
M–
E1
B27(A), m1(B)
Cooling Fan
ECU No. 1
2 B
1 B
3 A
W
R
M
W–B
1 A
2 A
+B2
SI2
M+
M–
E2
B28(A), m2(B)
Cooling Fan
ECU No. 2
2 B
1 B
3 A
W
R
M
m1(B)
Cooling Fan
Motor No. 1
m2(B)
Cooling Fan Motor No. 1
W–B
W–B
W–B
W–B
W–B
W–B
W–B
W–B
B2
B1
B3

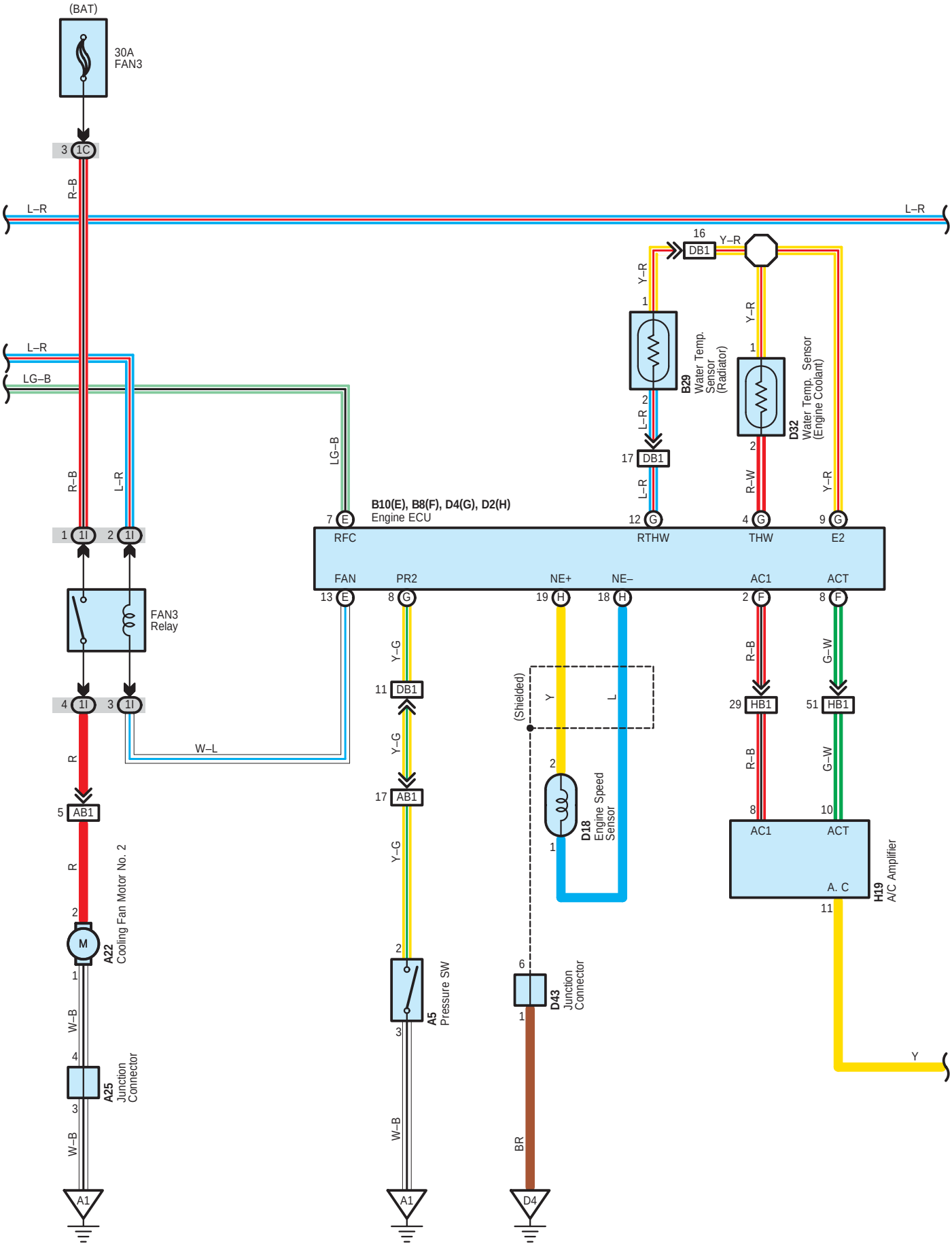
(BAT)
30A
FAN3
3 1C
R–B
L–R
L–R
L–R
LG–B
R–B
L–R
LG–B
1 1I
2 1I
FAN3
Relay
4 1I
3 1I
W–L
R
5 AB1
R
2
M
A22
Cooling Fan Motor No. 2
1
W–B
4
A25
Junction
Connector
3
W–B
A1
16 DB1
Y–R
Y–R
1
B29
Water Temp.
Sensor
(Radiator)
2
L–R
17 DB1
L–R
12 G
RTHW
Y–R
1
D32
Water Temp. Sensor
(Engine Coolant)
2
R–W
4 G
THW
Y–R
9 G
E2
7 E
RFC
B10(E), B8(F), D4(G), D2(H)
Engine ECU
FAN
13 E
PR2
8 G
NE+
19 H
NE–
18 H
AC1
2 F
ACT
8 F
Y–G
11 DB1
Y–G
17 AB1
Y–G
2
A5
Pressure SW
3
W–B
A1
(Shielded)
Y
L
2
D18
Engine Speed
Sensor
1
6
D43
Junction
Connector
1
BR
D4
R–B
29 HB1
R–B
8
AC1
G–W
51 HB1
G–W
10
ACT
A. C
H19
A/C Amplifier
11
Y

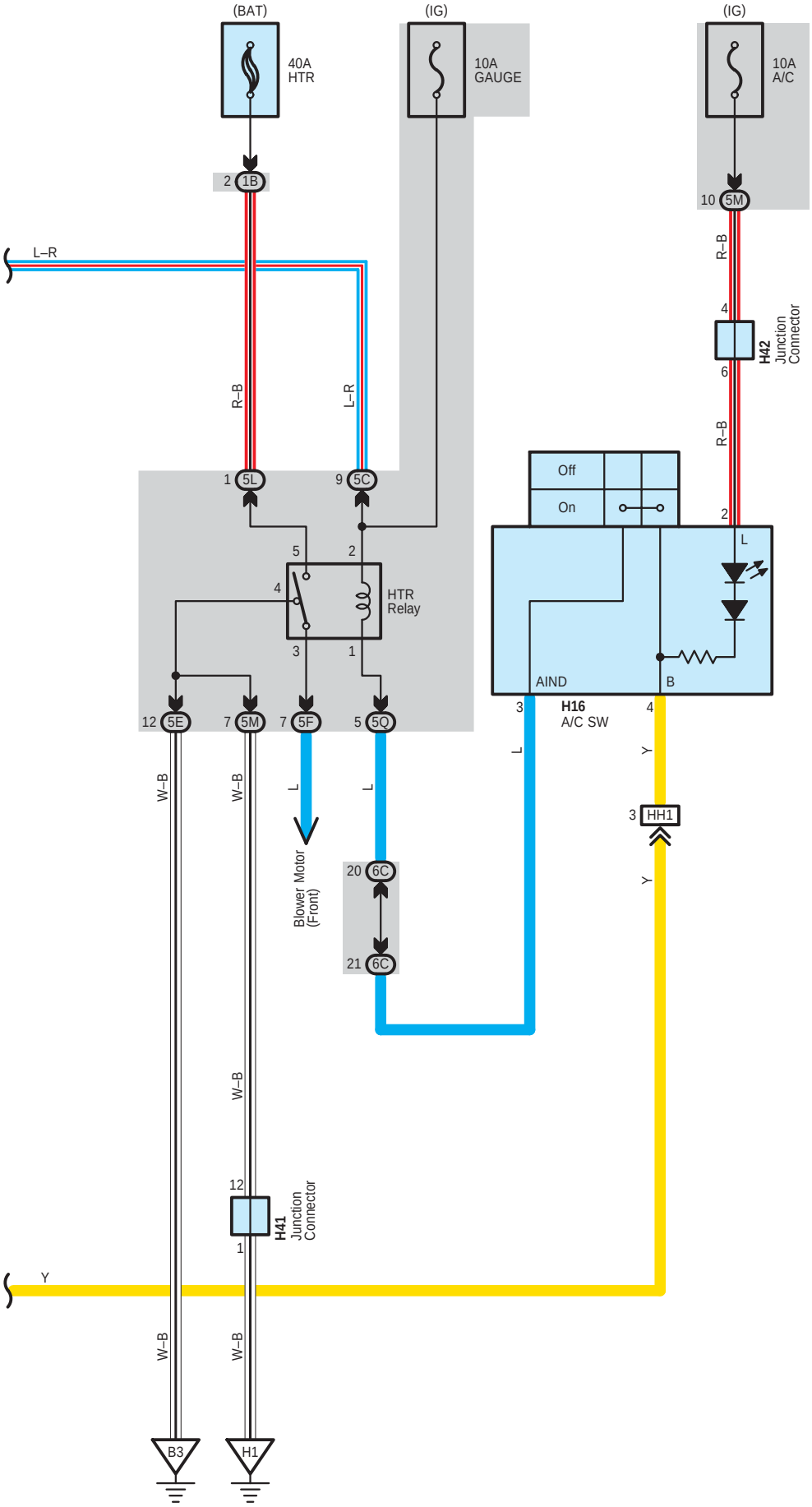
(BAT)
40A
HTR
(IG)
10A
GAUGE
(IG)
10A
A/C
2 1B
10 5M
L–R
R–B
L–R
R–B
4
H42
Junction
Connector
6
R–B
1 5L
9 5C
Off
On
2
L
5
2
4
HTR
Relay
3
1
AIND
B
3
H16
A/C SW
4
12 5E
7 5M
7 5F
5 5Q
W–B
W–B
L
L
L
Y
3 HH1
Y
Blower Motor
(Front)
20 6C
21 6C
W–B
12
H41
Junction
Connector
1
Y
W–B
W–B
B3
H1

**System Outline**

**System Operation**

If the ignition SW is turned to ON, the current from the GAUGE fuse is sent to the coil side and the FAN1, FAN2, FAN3 relay is turned to ON. Then the current flows to TERMINAL (A) 1 of the cooling fan ECU No.1, No.2. At the same time, the conditions of the A/C SW, A/C pressure sensor, water temp. sensor and engine rotation are sent to the TERMINAL (A) 2 as signals from the TERMINAL RFC of the engine ECU. As a result of that, the cooling fan ECU No.1, No.2 continuously controls the rotation of the fan motor and keeps a balance between the cooling efficiency and silentness with the optimal fan rotation.

**○ : Parts Location**

| Code | See Page | Code | See Page | Code | See Page |
|---|---|---|---|---|---|
| A5 | 48 (LHD) | B29 | 46 (*3) | H16 | 49 (LHD) |
| | 56 (RHD) | | 54 (*6) | | 57 (RHD) |
| A22 | 48 (LHD) | B36 | 46 (*3) | H19 | 49 (LHD) |
| | 56 (RHD) | | 54 (*6) | | 57 (RHD) |
| A25 | 48 (LHD) | D2 H | 46 (*3) | H41 | 49 (LHD) |
| | 56 (RHD) | | 54 (*6) | | 57 (RHD) |
| B8 F | 46 (*3) | D4 G | 46 (*3) | H42 | 49 (LHD) |
| | 54 (*6) | | 54 (*6) | | 57 (RHD) |
| B10 E | 46 (*3) | D18 | 46 (*3) | m1 B | 46 (*3) |
| | 54 (*6) | | 54 (*6) | | 54 (*6) |
| B27 A | 46 (*3) | D32 | 46 (*3) | m2 B | 46 (*3) |
| | 54 (*6) | | 54 (*6) | | 54 (*6) |
| B28 A | 46 (*3) | D43 | 46 (*3) | | |
| | 54 (*6) | | 54 (*6) | | |

**▭ : Relay Blocks**

| Code | See Page | Relay Blocks (Relay Block Location) |
|---|---|---|
| 1 | 23 (*8) | Engine Room R/B No.1 (Engine Compartment Front) |

**▭ : Junction Block and Wire Harness Connector**

| Code | See Page | Junction Block and Wire Harness (Connector Location) |
|---|---|---|
| 1B | 24 | Engine Room Main Wire and Engine Room J/B No.1 (Engine Compartment Front) |
| 1C | | |
| 1I | 25 | |
| 5C | 30 | Instrument Panel Wire and Instrument Panel J/B (Left Side of Instrument Panel) |
| 5E | 30 | Engine Room Main Wire and Instrument Panel J/B (Left Side of Instrument Panel) |
| 5F | 30 | Instrument Panel Wire and Instrument Panel J/B (Left Side of Instrument Panel) |
| 5L | 30 | Engine Room Main Wire and Instrument Panel J/B (Left Side of Instrument Panel) |
| 5M | 31 | Instrument Panel Wire and Instrument Panel J/B (Left Side of Instrument Panel) |
| 5Q | | |
| 6C | 38 (LHD) | Instrument Panel Wire and Center J/B (Instrument Panel Reinforcement LH) |
| | 38 (RHD) | Instrument Panel Wire and Center J/B (Instrument Panel Reinforcement RH) |

* 1 : LHD 2TR–FE * 2 : LHD 2KD–FTV * 3 : LHD 5L–E * 4 : RHD 2TR–FE * 5 : RHD 2KD–FTV * 6 : RHD 5L–E * 7 : 2TR–FE
* 8 : 2KD–FTV, 5L–E

# Cooling Fan (5L–E)

**: Connector Joining Wire Harness and Wire Harness**

| Code | See Page | Joining Wire Harness and Wire Harness (Connector Location) |
|---|---|---|
| AB1 | 64 (LHD) | Cowl to Head Lamp Wire and Engine Room Main Wire (Left Side of the Instrument Panel J/B) |
| | 72 (RHD) | |
| DB1 | 62 (*3) | Engine Wire and Engine Room Main Wire (Front Side of Engine Room R/B No.1) |
| | 70 (*6) | |
| HB1 | 64 (LHD) | Instrument Panel Wire and Engine Room Main Wire (Under the Instrument Panel J/B) |
| | 72 (RHD) | |
| HH1 | 64 (LHD) | Instrument Panel Wire and Instrument Panel Wire (Near the Steering Column) |
| | 72 (RHD) | Instrument Panel Wire and Instrument Panel Wire (Instrument Panel Reinforcement RH) |

**: Ground Points**

| Code | See Page | Ground Points Location |
|---|---|---|
| A1 | 64 (LHD) | Dash Panel Right |
| | 72 (RHD) | |
| B1 | 62 (*3) | Front Floor Panel Right |
| | 70 (*6) | |
| B2 | 62 (*3) | |
| | 70 (*6) | |
| B3 | 62 (*3) | Front Floor Panel Left |
| | 70 (*6) | |
| D4 | 62 (*3) | Engine Block |
| | 70 (*6) | |
| H1 | 64 (LHD) | Instrument Panel Reinforcement |
| | 72 (RHD) | |

* 1 : LHD 2TR–FE * 2 : LHD 2KD–FTV * 3 : LHD 5L–E * 4 : RHD 2TR–FE * 5 : RHD 2KD–FTV * 6 : RHD 5L–E * 7 : 2TR–FE
* 8 : 2KD–FTV, 5L–E

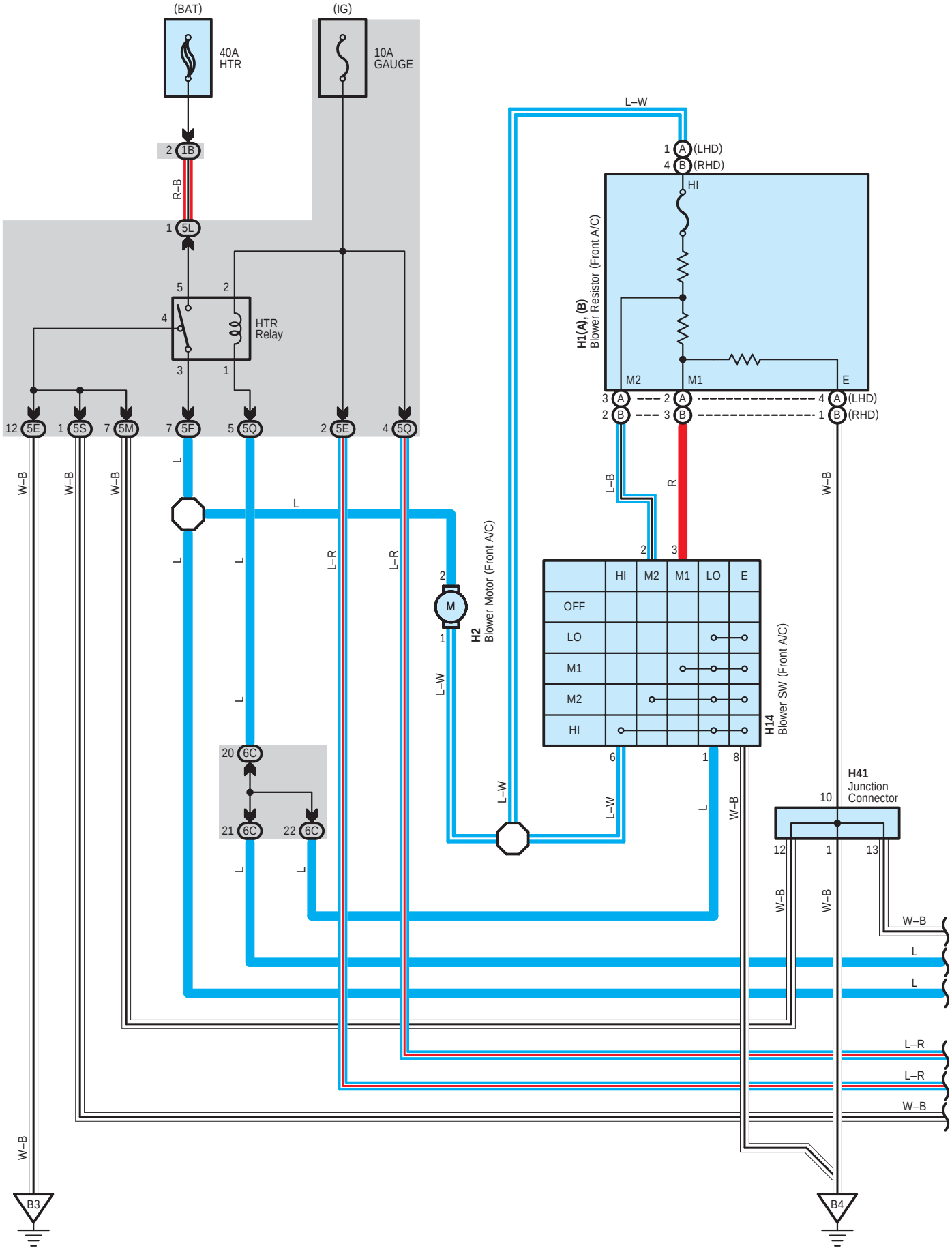
(BAT)
(IG)
40A HTR
10A GAUGE
2 1B
R–B
1 5L
5
2
4
HTR Relay
3
1
12 5E
1 5S
7 5M
7 5F
5 5Q
2 5E
4 5Q
L–W
1 A (LHD)
4 B (RHD)
HI
H1(A), (B) Blower Resistor (Front A/C)
M2
M1
E
3 A
2 B
2 A
3 B
4 A (LHD)
1 B (RHD)
L–B
R
W–B
2
3
HI
M2
M1
LO
E
OFF
LO
M1
M2
HI
H14 Blower SW (Front A/C)
6
1
8
H2 Blower Motor (Front A/C)
M
2
1
L–W
L
L–R
20 6C
21 6C
22 6C
H41 Junction Connector
10
12
1
13
W–B
L
L–R
W–B
B3
B4

＊1 : LHD 2TR–FE

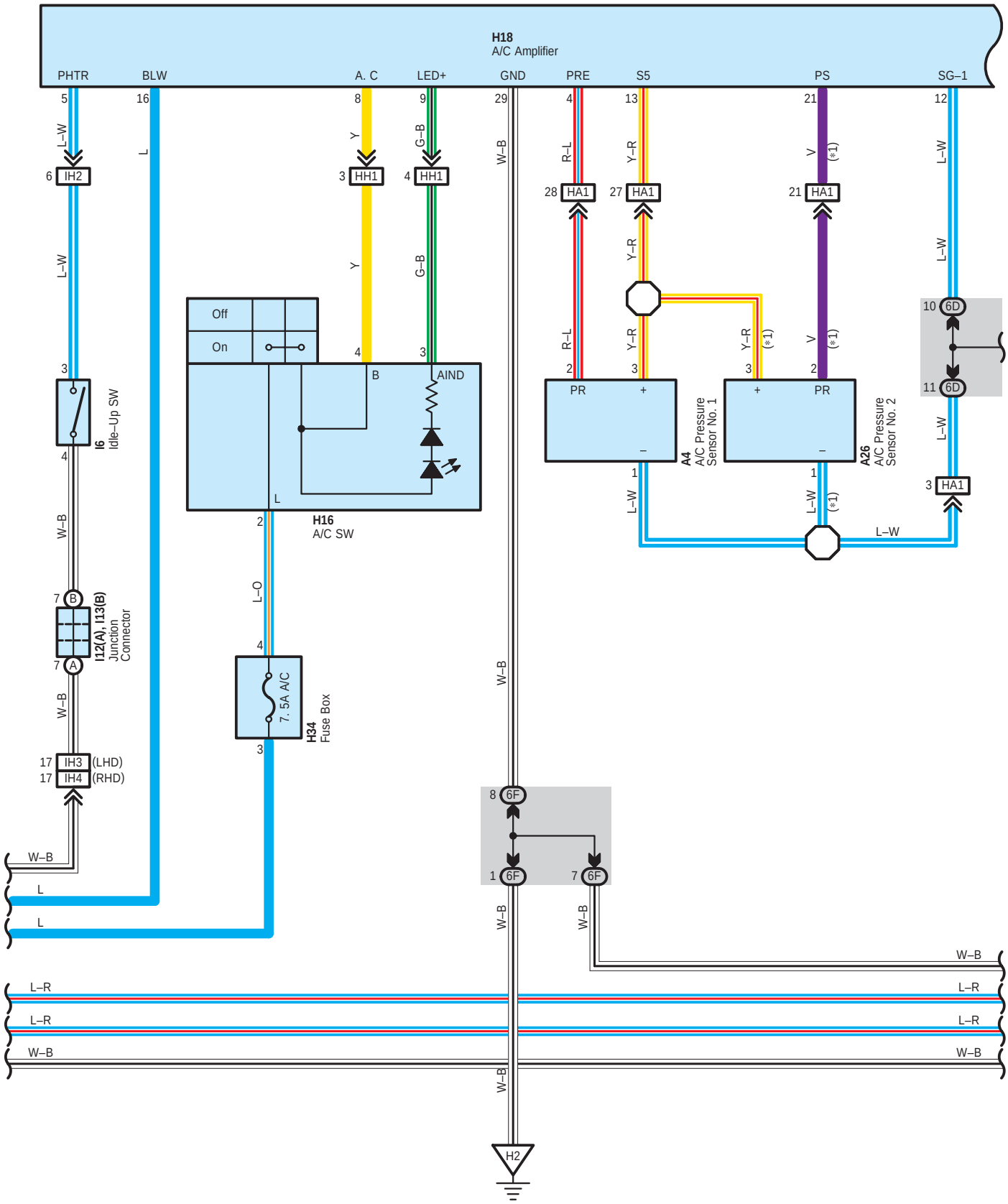
H18
A/C Amplifier
PHTR
BLW
A. C
LED+
GND
PRE
S5
PS
SG–1
I6
Idle–Up SW
I12(A), I13(B)
Junction Connector
H16
A/C SW
Off
On
AIND
H34
Fuse Box
7. 5A A/C
A4
A/C Pressure Sensor No. 1
A26
A/C Pressure Sensor No. 2
IH2
IH3 (LHD)
IH4 (RHD)
HH1
HA1
6D
6F
H2

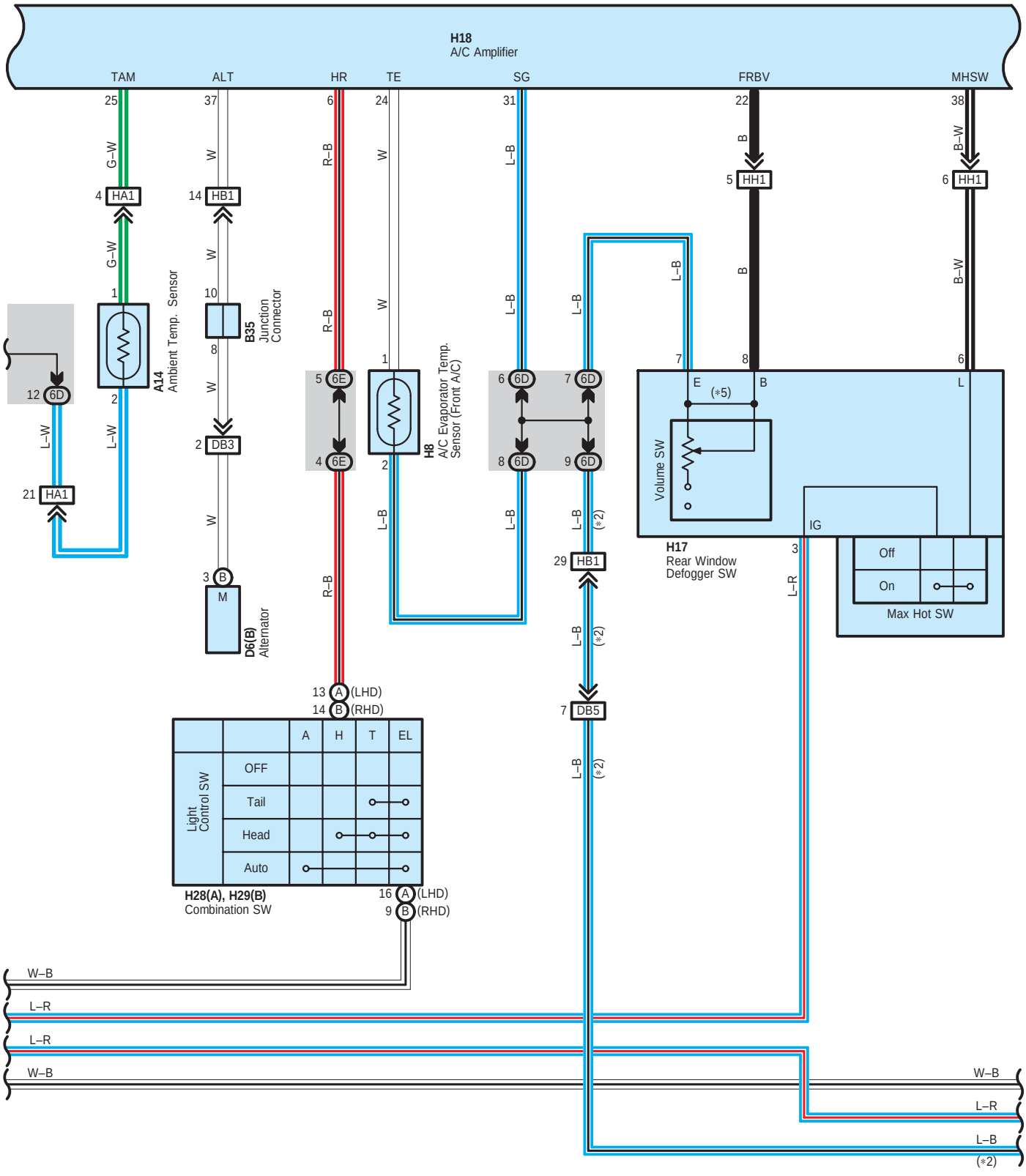
H18
A/C Amplifier
TAM
ALT
HR
TE
SG
FRBV
MHSW
A14
Ambient Temp. Sensor
B35
Junction Connector
D6(B)
Alternator
H8
A/C Evaporator Temp. Sensor (Front A/C)
H17
Rear Window Defogger SW
Volume SW
Max Hot SW
Off
On
IG
(*5)
(*2)
(LHD)
(RHD)
Light Control SW
OFF
Tail
Head
Auto
A
H
T
EL
H28(A), H29(B)
Combination SW
W–B
L–R
L–B

∗ 2 : 2KD–FTV
∗ 3 : 2TR–FE
∗ 4 : Shielded
∗ 5 : w/o Volume SW

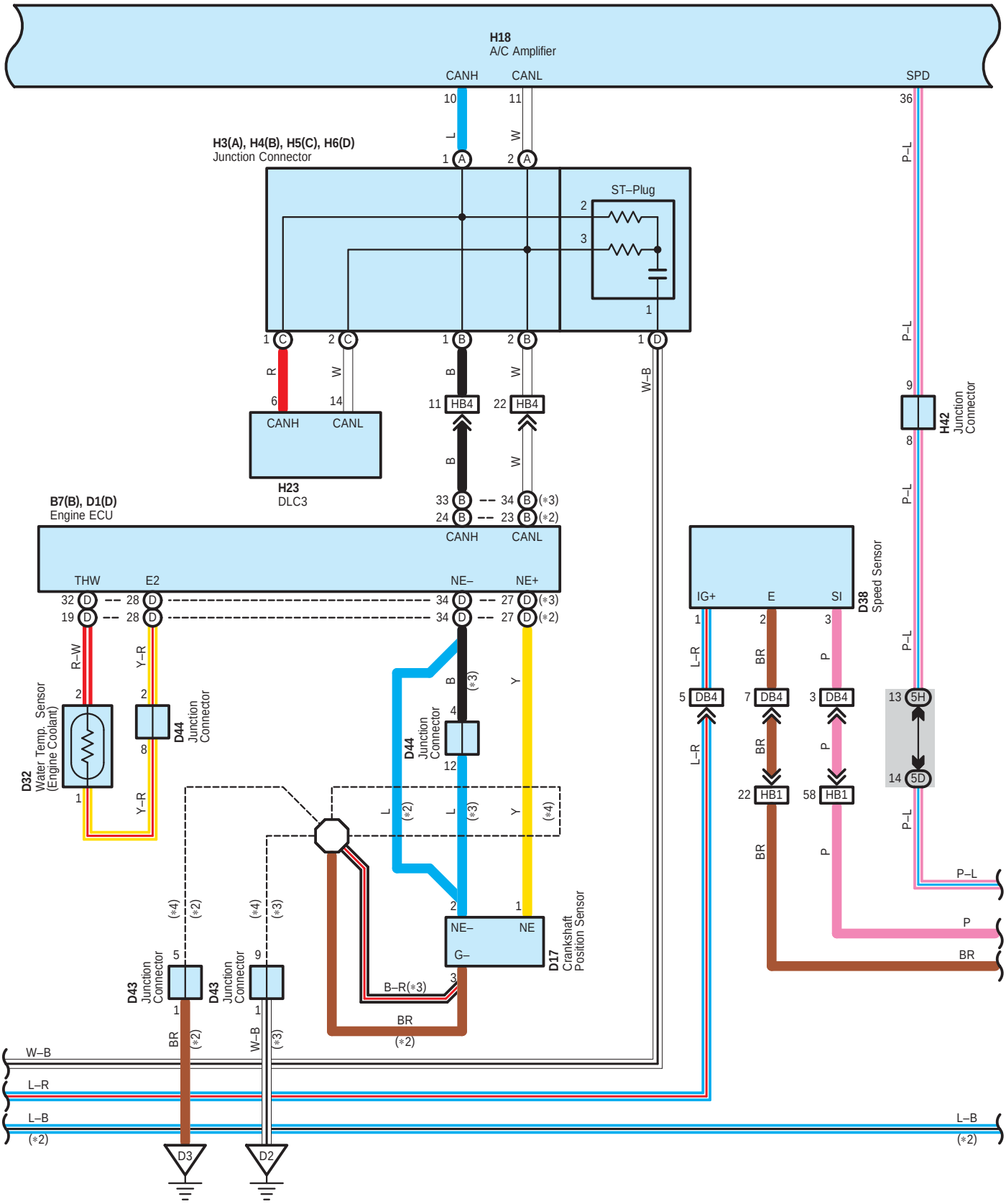

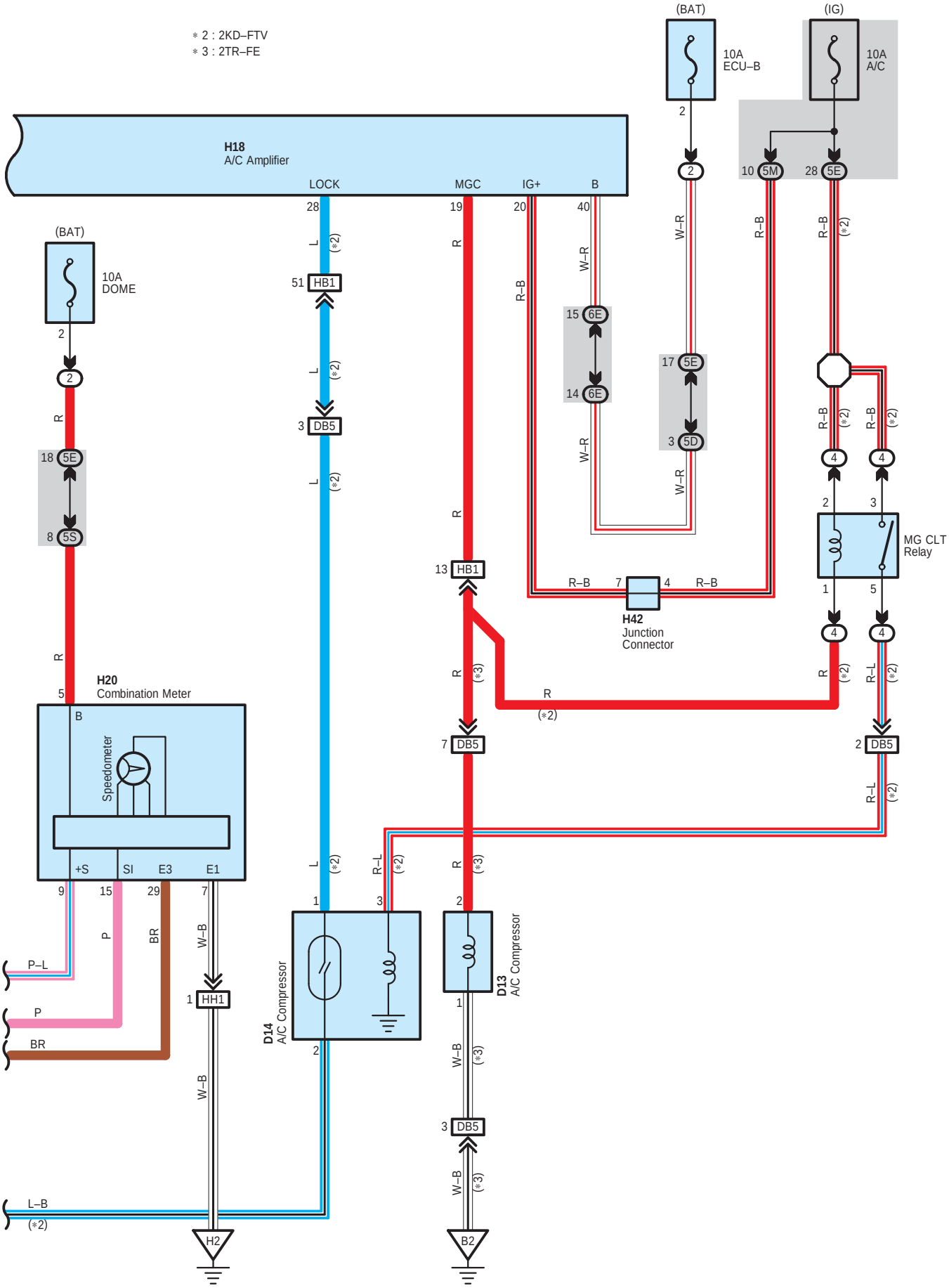

* 2 : 2KD–FTV
* 3 : 2TR–FE
H18
A/C Amplifier
LOCK
MGC
IG+
B
(BAT)
10A
ECU–B
(IG)
10A
A/C
(BAT)
10A
DOME
H20
Combination Meter
Speedometer
+S
SI
E3
E1
H42
Junction
Connector
MG CLT
Relay
D14
A/C Compressor
D13
A/C Compressor
HB1
DB5
HH1
H2
B2
P–L
P
BR
L–B
(*2)

**System Outline**

Current is applied at all times through the HTR fuse to TERMINAL 5 of the HTR relay.
When the ignition SW is turned on, the current flows through the GAUGE fuse to TERMINAL 2 of the HTR relay to TERMINAL 1 to TERMINAL 1 of the blower SW (Front A/C).

**Blower Motor Operation**

* Low speed operation
  When the blower SW (Front A/C) is moved to LO position, the current flows to TERMINAL 1 of the blower SW (Front A/C) to TERMINAL 8 to GROUND, causing the HTR relay to turn on. This causes the current flows from the HTR fuse to TERMINAL 5 of the HTR relay to TERMINAL 3 to TERMINAL 2 of the blower motor (Front A/C) to TERMINAL 1 to TERMINAL 1 (LHD), 4 (RHD) of the blower resistor (Front A/C) to TERMINAL 4 (LHD), 1 (RHD) to GROUND, rotating the blower motor (Front A/C) at low speed.

* Medium speed operation (Operation at M1, M2)
  When the blower SW (Front A/C) is moved to M1 position, the current flows to TERMINAL 1 of the blower SW (Front A/C) to TERMINAL 8 to GROUND, causing the HTR relay to turn on. This causes the current flows from the HTR fuse to TERMINAL 5 of the HTR relay to TERMINAL 3 to TERMINAL 2 of the blower motor (Front A/C) to TERMINAL 1 to TERMINAL 1 (LHD), 4 (RHD) of the blower resistor (Front A/C) to TERMINAL 2 (LHD), 3 (RHD) to TERMINAL 3 of the blower SW (Front A/C) to TERMINAL 8 to GROUND. At this time, the blower resistance of the blower resistor (Front A/C) is smaller than at low speed, so the blower motor (Front A/C) rotates at medium low speed.
  When the blower SW (Front A/C) is moved to M2 position, the current flows through the HTR relay to TERMINAL 2 of the blower motor (Front A/C) to TERMINAL 1 to TERMINAL 1 (LHD), 4 (RHD) of the blower resistor (Front A/C) to TERMINAL 3 (LHD), 2 (RHD) to TERMINAL 2 of the blower SW (Front A/C) to TERMINAL 8 to GROUND. At this time, resistance of the blower resistor (Front A/C) is smaller than at M1 position, so the blower motor (Front A/C) rotates at medium high speed.

* High speed operation
  When the blower SW (Front A/C) is moved to HI position, the current flows to TERMINAL 1 of the blower SW (Front A/C) to TERMINAL 8 to GROUND, causing the HTR relay to turn on.
  This causes the current flows from the HTR fuse to TERMINAL 5 of the HTR relay to TERMINAL 3 to TERMINAL 2 of the blower motor (Front A/C) to TERMINAL 1 to TERMINAL 6 of the blower SW (Front A/C) to TERMINAL 8 to GROUND, rotating the blower motor (Front A/C) at high speed.

# Front Air Conditioner (2TR–FE, 2KD–FTV)

**○ : Parts Location**

| Code | See Page | Code | See Page | Code | See Page |
|---|---|---|---|---|---|
| A4 | 48 (LHD) | D32 | 44 (*1) | H8 | 57 (RHD) |
| | 56 (RHD) | | 45 (*2) | H14 | 49 (LHD) |
| A14 | 48 (LHD) | | 52 (*4) | | 57 (RHD) |
| | 56 (RHD) | | 53 (*5) | H16 | 49 (LHD) |
| A26 | 48 (LHD) | D38 | 44 (*1) | | 57 (RHD) |
| B7 B | 44 (*1) | | 45 (*2) | H17 | 49 (LHD) |
| | 45 (*2) | | 52 (*4) | | 57 (RHD) |
| | 52 (*4) | | 53 (*5) | H18 | 49 (LHD) |
| | 53 (*5) | D43 | 44 (*1) | | 57 (RHD) |
| B35 | 44 (*1) | | 45 (*2) | H20 | 49 (LHD) |
| | 45 (*2) | | 52 (*4) | | 57 (RHD) |
| | 52 (*4) | | 53 (*5) | H23 | 49 (LHD) |
| | 53 (*5) | D44 | 44 (*1) | | 57 (RHD) |
| D1 D | 44 (*1) | | 45 (*2) | H28 A | 49 (LHD) |
| | 45 (*2) | | 52 (*4) | H29 B | 57 (RHD) |
| | 52 (*4) | | 53 (*5) | H34 | 49 (LHD) |
| | 53 (*5) | H1 A | 49 (LHD) | | 57 (RHD) |
| D6 B | 44 (*1) | H1 B | 57 (RHD) | H41 | 49 (LHD) |
| | 45 (*2) | H2 | 49 (LHD) | | 57 (RHD) |
| | 52 (*4) | | 57 (RHD) | H42 | 49 (LHD) |
| | 53 (*5) | H3 A | 42, 49 (LHD) | | 57 (RHD) |
| D13 | 44 (*1) | | 42, 57 (RHD) | I6 | 48 (LHD) |
| | 52 (*4) | H4 B | 42, 49 (LHD) | | 56 (RHD) |
| D14 | 45 (*2) | | 42, 57 (RHD) | I12 A | 48 (LHD) |
| | 53 (*5) | H5 C | 42, 49 (LHD) | | 56 (RHD) |
| D17 | 44 (*1) | | 42, 57 (RHD) | I13 B | 48 (LHD) |
| | 45 (*2) | H6 D | 42, 49 (LHD) | | 56 (RHD) |
| | 52 (*4) | | 42, 57 (RHD) | | |
| | 53 (*5) | H8 | 49 (LHD) | | |

**⬭ : Relay Blocks**

| Code | See Page | Relay Blocks (Relay Block Location) |
|---|---|---|
| 2 | 28 | Engine Room R/B No.2 (Inside of Battery Room) |
| 4 | 29 | Instrument Panel R/B (Under the Glove Box) |

* 1 : LHD 2TR–FE * 2 : LHD 2KD–FTV * 3 : LHD 5L–E * 4 : RHD 2TR–FE * 5 : RHD 2KD–FTV * 6 : RHD 5L–E * 7 : 2TR–FE
* 8 : 2KD–FTV, 5L–E

**: Junction Block and Wire Harness Connector**

| Code | See Page | Junction Block and Wire Harness (Connector Location) |
|---|---|---|
| 1B | 24 | Engine Room Main Wire and Engine Room J/B No.1 (Engine Compartment Front) |
| 5D | 30 | Instrument Panel Wire and Instrument Panel J/B (Left Side of Instrument Panel) |
| 5E | 30 | Engine Room Main Wire and Instrument Panel J/B (Left Side of Instrument Panel) |
| 5F | 30 | Instrument Panel Wire and Instrument Panel J/B (Left Side of Instrument Panel) |
| 5H | | |
| 5L | 30 | Engine Room Main Wire and Instrument Panel J/B (Left Side of Instrument Panel) |
| 5M | 31 | Instrument Panel Wire and Instrument Panel J/B (Left Side of Instrument Panel) |
| 5Q | | |
| 5S | | |
| 6C | 38 (LHD) | Instrument Panel Wire and Center J/B (Instrument Panel Reinforcement LH) |
| | 38 (RHD) | Instrument Panel Wire and Center J/B (Instrument Panel Reinforcement RH) |
| 6D | 38 (LHD) | Instrument Panel Wire and Center J/B (Instrument Panel Reinforcement LH) |
| | 38 (RHD) | Instrument Panel Wire and Center J/B (Instrument Panel Reinforcement RH) |
| 6E | 38 (LHD) | Instrument Panel Wire and Center J/B (Instrument Panel Reinforcement LH) |
| | 38 (RHD) | Instrument Panel Wire and Center J/B (Instrument Panel Reinforcement RH) |
| 6F | 38 (LHD) | Instrument Panel Wire and Center J/B (Instrument Panel Reinforcement LH) |
| | 38 (RHD) | Instrument Panel Wire and Center J/B (Instrument Panel Reinforcement RH) |

**: Connector Joining Wire Harness and Wire Harness**

| Code | See Page | Joining Wire Harness and Wire Harness (Connector Location) |
|---|---|---|
| DB3 | 60 (*1) | Engine Wire and Engine Room Main Wire (Front Side of Engine Room R/B No.1) |
| | 61 (*2) | |
| | 68 (*4) | |
| | 69 (*5) | |
| DB4 | 60 (*1) | |
| | 61 (*2) | |
| | 68 (*4) | |
| | 69 (*5) | |
| DB5 | 60 (*1) | |
| | 61 (*2) | |
| | 68 (*4) | |
| | 69 (*5) | |
| HA1 | 64 (LHD) | Instrument Panel Wire and Cowl to Head Lamp Wire (Under the Instrument Panel J/B) |
| | 72 (RHD) | |
| HB1 | 64 (LHD) | Instrument Panel Wire and Engine Room Main Wire (Under the Instrument Panel J/B) |
| | 72 (RHD) | |
| HB4 | 64 (LHD) | |
| | 72 (RHD) | |
| HH1 | 64 (LHD) | Instrument Panel Wire and Instrument Panel Wire (Near the Steering Column) |
| | 72 (RHD) | Instrument Panel Wire and Instrument Panel Wire (Instrument Panel Reinforcement RH) |
| IH2 | 64 (LHD) | Instrument Panel No.2 Wire and Instrument Panel Wire (Instrument Panel Reinforcement LH) |
| | 72 (RHD) | |
| IH3 | 64 (LHD) | Instrument Panel No.2 Wire and Instrument Panel Wire (Instrument Panel Reinforcement RH) |
| IH4 | 72 (RHD) | |

* 1 : LHD 2TR–FE * 2 : LHD 2KD–FTV * 3 : LHD 5L–E * 4 : RHD 2TR–FE * 5 : RHD 2KD–FTV * 6 : RHD 5L–E * 7 : 2TR–FE
* 8 : 2KD–FTV, 5L–E

# Front Air Conditioner (2TR–FE, 2KD–FTV)

▽ : **Ground Points**

| Code | See Page | Ground Points Location |
|---|---|---|
| B2 | 60 (*1) | Front Floor Panel Right |
| | 68 (*4) | |
| B3 | 60 (*1) | Front Floor Panel Left |
| | 61 (*2) | |
| | 68 (*4) | |
| | 69 (*5) | |
| B4 | 64 (LHD) | Cowl Side Panel LH |
| | 72 (RHD) | |
| D2 | 60 (*1) | Engine Block |
| | 68 (*4) | |
| D3 | 61 (*2) | |
| | 69 (*5) | |
| H2 | 64 (LHD) | Instrument Panel Reinforcement |
| | 72 (RHD) | |

* 1 : LHD 2TR–FE * 2 : LHD 2KD–FTV * 3 : LHD 5L–E * 4 : RHD 2TR–FE * 5 : RHD 2KD–FTV * 6 : RHD 5L–E * 7 : 2TR–FE
* 8 : 2KD–FTV, 5L–E

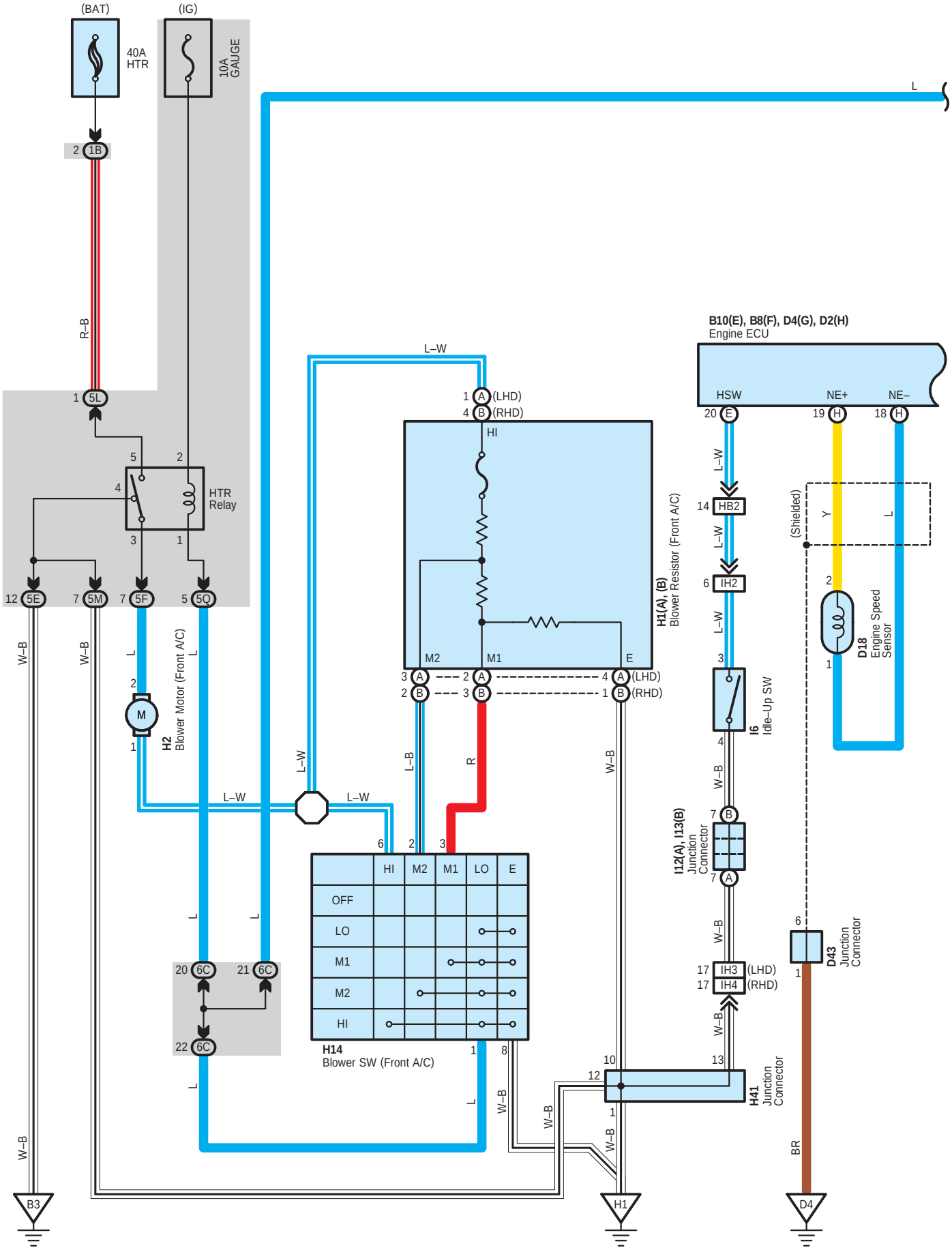
(BAT)
(IG)
40A HTR
10A GAUGE
2 1B
R–B
1 5L
HTR Relay
12 5E
7 5M
7 5F
5 5Q
W–B
L
H2 Blower Motor (Front A/C)
L–W
L–B
R
W–B
1 A (LHD)
4 B (RHD)
HI
M2
M1
E
H1(A), (B) Blower Resistor (Front A/C)
B10(E), B8(F), D4(G), D2(H) Engine ECU
HSW
NE+
NE–
20 E
19 H
18 H
14 HB2
6 IH2
3
I6 Idle–Up SW
4
7 B
7 A
I12(A), I13(B) Junction Connector
17 IH3 (LHD)
17 IH4 (RHD)
13
H41 Junction Connector
10
12
1
(Shielded)
Y
L
2
D18 Engine Speed Sensor
1
6
D43 Junction Connector
1
BR
D4
H14 Blower SW (Front A/C)
HI M2 M1 LO E
OFF
LO
M1
M2
HI
6 2 3
1 8
20 6C
21 6C
22 6C
B3
H1

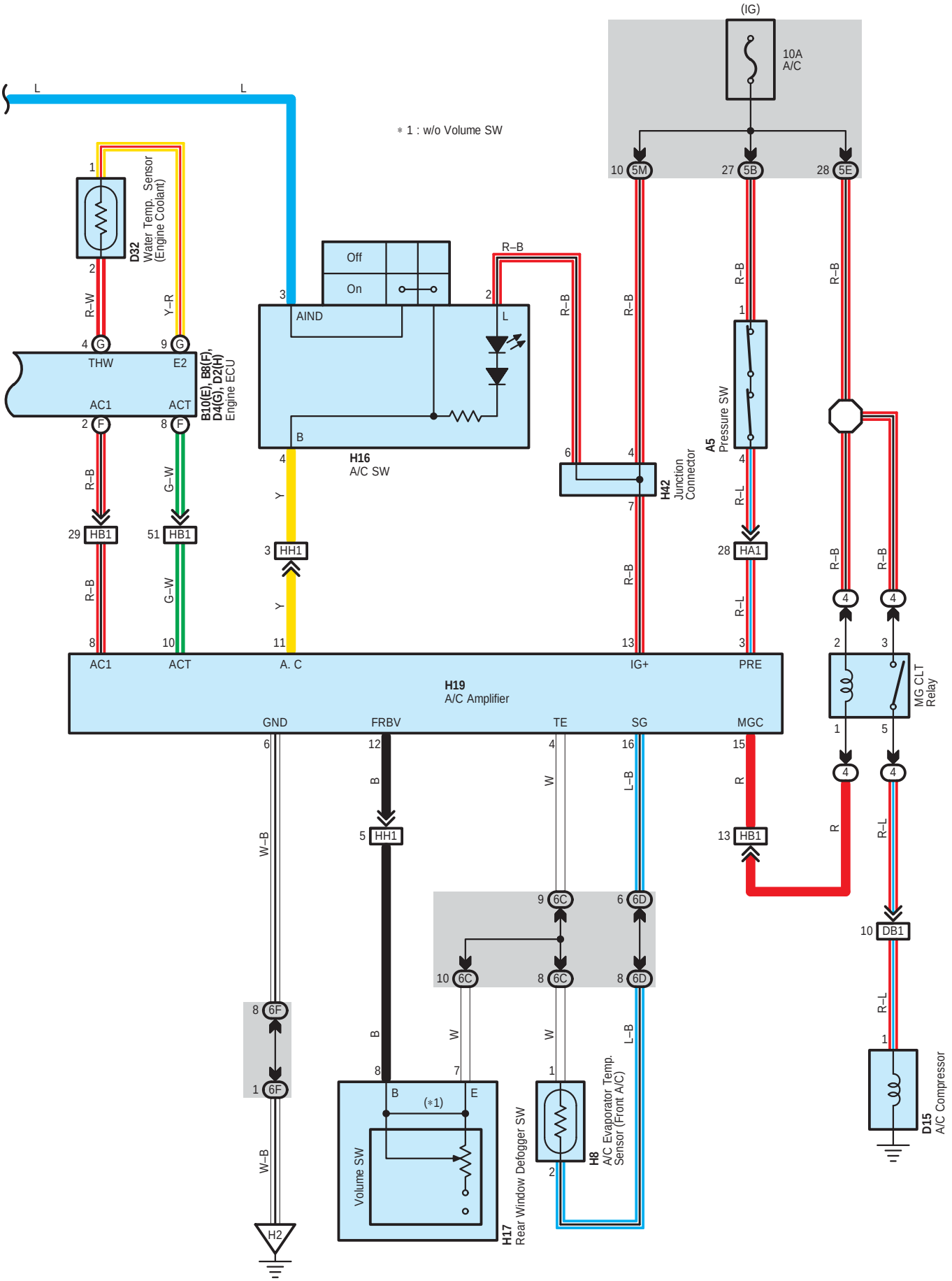
(IG)
10A
A/C
10 5M
27 5B
28 5E
∗ 1 : w/o Volume SW
L
L
D32
Water Temp. Sensor
(Engine Coolant)
R–W
Y–R
4 G
9 G
THW
E2
AC1
ACT
2 F
8 F
B10(E), B8(F),
D4(G), D2(H)
Engine ECU
R–B
G–W
29 HB1
51 HB1
8
10
AC1
ACT
Off
On
AIND
B
H16
A/C SW
3
2
L
4
Y
3 HH1
11
A. C
R–B
6
4
7
H42
Junction
Connector
13
IG+
R–B
R–B
1
4
R–L
28 HA1
3
PRE
A5
Pressure SW
R–B
R–B
4
4
2
3
MG CLT
Relay
1
5
4
4
R
R–L
10 DB1
R–L
1
D15
A/C Compressor
H19
A/C Amplifier
GND
FRBV
TE
SG
MGC
6
12
4
16
15
W–B
B
W
L–B
R
5 HH1
13 HB1
9 6C
6 6D
10 6C
8 6C
8 6D
8 6F
1 6F
W–B
B
W
W
L–B
8
7
1
2
B
(∗1)
E
Volume SW
H17
Rear Window Defogger SW
H8
A/C Evaporator Temp.
Sensor (Front A/C)
H2

**System Outline**

Current is applied at all times through the HTR fuse to TERMINAL 5 of the HTR relay.
When the ignition SW is turned on, the current flows through the GAUGE fuse to TERMINAL 2 of the HTR relay to TERMINAL 1 to TERMINAL 1 of the blower SW (Front A/C).

**Blower Motor Operation**

* Low speed operation
  When the blower SW (Front A/C) is moved to LO position, the current flows to TERMINAL 1 of the blower SW (Front A/C) to TERMINAL 8 to GROUND, causing the HTR relay to turn on. This causes the current flows from the HTR fuse to TERMINAL 5 of the HTR relay to TERMINAL 3 to TERMINAL 2 of the blower motor (Front A/C) to TERMINAL 1 to TERMINAL 1 (LHD), 4 (RHD) of the blower resistor (Front A/C) to TERMINAL 4 (LHD), 1 (RHD) to GROUND, rotating the blower motor (Front A/C) at low speed.

* Medium speed operation (Operation at M1, M2)
  When the blower SW (Front A/C) is moved to M1 position, the current flows to TERMINAL 1 of the blower SW (Front A/C) to TERMINAL 8 to GROUND, causing the HTR relay to turn on. This causes the current flows from the HTR fuse to TERMINAL 5 of the HTR relay to TERMINAL 3 to TERMINAL 2 of the blower motor (Front A/C) to TERMINAL 1 to TERMINAL 1 (LHD), 4 (RHD) of the blower resistor (Front A/C) to TERMINAL 2 (LHD), 3 (RHD) to TERMINAL 3 of the blower SW (Front A/C) to TERMINAL 8 to GROUND. At this time, the blower resistance of the blower resistor (Front A/C) is smaller than at low speed, so the blower motor (Front A/C) rotates at medium low speed.
  When the blower SW (Front A/C) is moved to M2 position, the current flows through the HTR relay to TERMINAL 2 of the blower motor (Front A/C) to TERMINAL 1 to TERMINAL 1 (LHD), 4 (RHD) of the blower resistor (Front A/C) to TERMINAL 3 (LHD), 2 (RHD) to TERMINAL 2 of the blower SW (Front A/C) to TERMINAL 8 to GROUND. At this time, resistance of the blower resistor (Front A/C) is smaller than at M1 position, so the blower motor (Front A/C) rotates at medium high speed.

* High speed operation
  When the blower SW (Front A/C) is moved to HI position, the current flows to TERMINAL 1 of the blower SW (Front A/C) to TERMINAL 8 to GROUND, causing the HTR relay to turn on.
  This causes the current flows from the HTR fuse to TERMINAL 5 of the HTR relay to TERMINAL 3 to TERMINAL 2 of the blower motor (Front A/C) to TERMINAL 1 to TERMINAL 6 of the blower SW (Front A/C) to TERMINAL 8 to GROUND, rotating the blower motor (Front A/C) at high speed.

**○ : Parts Location**

| Code | See Page | Code | See Page | Code | See Page |
|---|---|---|---|---|---|
| A5 | 48 (LHD) | D32 | 46 (*3) | H17 | 49 (LHD) |
| | 56 (RHD) | | 54 (*6) | | 57 (RHD) |
| B8 F | 46 (*3) | D43 | 46 (*3) | H19 | 49 (LHD) |
| | 54 (*6) | | 54 (*6) | | 57 (RHD) |
| B10 E | 46 (*3) | H1 A | 49 (LHD) | H41 | 49 (LHD) |
| | 54 (*6) | H1 B | 57 (RHD) | | 57 (RHD) |
| D2 H | 46 (*3) | H2 | 49 (LHD) | H42 | 49 (LHD) |
| | 54 (*6) | | 57 (RHD) | | 57 (RHD) |
| D4 G | 46 (*3) | H8 | 49 (LHD) | I6 | 48 (LHD) |
| | 54 (*6) | | 57 (RHD) | | 56 (RHD) |
| D15 | 46 (*3) | H14 | 49 (LHD) | I12 A | 48 (LHD) |
| | 54 (*6) | | 57 (RHD) | | 56 (RHD) |
| D18 | 46 (*3) | H16 | 49 (LHD) | I13 B | 48 (LHD) |
| | 54 (*6) | | 57 (RHD) | | 56 (RHD) |

**▭ : Relay Blocks**

| Code | See Page | Relay Blocks (Relay Block Location) |
|---|---|---|
| 4 | 29 | Instrument Panel R/B (Under the Glove Box) |

* 1 : LHD 2TR–FE * 2 : LHD 2KD–FTV * 3 : LHD 5L–E * 4 : RHD 2TR–FE * 5 : RHD 2KD–FTV * 6 : RHD 5L–E * 7 : 2TR–FE
* 8 : 2KD–FTV, 5L–E

**: Junction Block and Wire Harness Connector**

| Code | See Page | Junction Block and Wire Harness (Connector Location) |
|---|---|---|
| 1B | 24 | Engine Room Main Wire and Engine Room J/B No.1 (Engine Compartment Front) |
| 5B | 30 | Cowl to Head Lamp Wire and Instrument Panel J/B (Left Side of Instrument Panel) |
| 5E | 30 | Engine Room Main Wire and Instrument Panel J/B (Left Side of Instrument Panel) |
| 5F | 30 | Instrument Panel Wire and Instrument Panel J/B (Left Side of Instrument Panel) |
| 5L | 30 | Engine Room Main Wire and Instrument Panel J/B (Left Side of Instrument Panel) |
| 5M | 31 | Instrument Panel Wire and Instrument Panel J/B (Left Side of Instrument Panel) |
| 5Q | | |
| 6C | 38 (LHD) | Instrument Panel Wire and Center J/B (Instrument Panel Reinforcement LH) |
| | 38 (RHD) | Instrument Panel Wire and Center J/B (Instrument Panel Reinforcement RH) |
| 6D | 38 (LHD) | Instrument Panel Wire and Center J/B (Instrument Panel Reinforcement LH) |
| | 38 (RHD) | Instrument Panel Wire and Center J/B (Instrument Panel Reinforcement RH) |
| 6F | 38 (LHD) | Instrument Panel Wire and Center J/B (Instrument Panel Reinforcement LH) |
| | 38 (RHD) | Instrument Panel Wire and Center J/B (Instrument Panel Reinforcement RH) |

**: Connector Joining Wire Harness and Wire Harness**

| Code | See Page | Joining Wire Harness and Wire Harness (Connector Location) |
|---|---|---|
| DB1 | 62 (*3) | Engine Wire and Engine Room Main Wire (Front Side of Engine Room R/B No.1) |
| | 70 (*6) | |
| HA1 | 64 (LHD) | Instrument Panel Wire and Cowl to Head Lamp Wire (Under the Instrument Panel J/B) |
| | 72 (RHD) | |
| HB1 | 64 (LHD) | Instrument Panel Wire and Engine Room Main Wire (Under the Instrument Panel J/B) |
| | 72 (RHD) | |
| HB2 | 64 (LHD) | |
| | 72 (RHD) | |
| HH1 | 64 (LHD) | Instrument Panel Wire and Instrument Panel Wire (Near the Steering Column) |
| | 72 (RHD) | Instrument Panel Wire and Instrument Panel Wire (Instrument Panel Reinforcement RH) |
| IH2 | 64 (LHD) | Instrument Panel No.2 Wire and Instrument Panel Wire (Instrument Panel Reinforcement LH) |
| | 72 (RHD) | |
| IH3 | 64 (LHD) | Instrument Panel No.2 Wire and Instrument Panel Wire (Instrument Panel Reinforcement RH) |
| IH4 | 72 (RHD) | |

**: Ground Points**

| Code | See Page | Ground Points Location |
|---|---|---|
| B3 | 62 (*3) | Front Floor Panel Left |
| | 70 (*6) | |
| D4 | 62 (*3) | Engine Block |
| | 70 (*6) | |
| H1 | 64 (LHD) | Instrument Panel Reinforcement |
| | 72 (RHD) | |
| H2 | 64 (LHD) | |
| | 72 (RHD) | |

* 1 : LHD 2TR–FE * 2 : LHD 2KD–FTV * 3 : LHD 5L–E * 4 : RHD 2TR–FE * 5 : RHD 2KD–FTV * 6 : RHD 5L–E * 7 : 2TR–FE
* 8 : 2KD–FTV, 5L–E

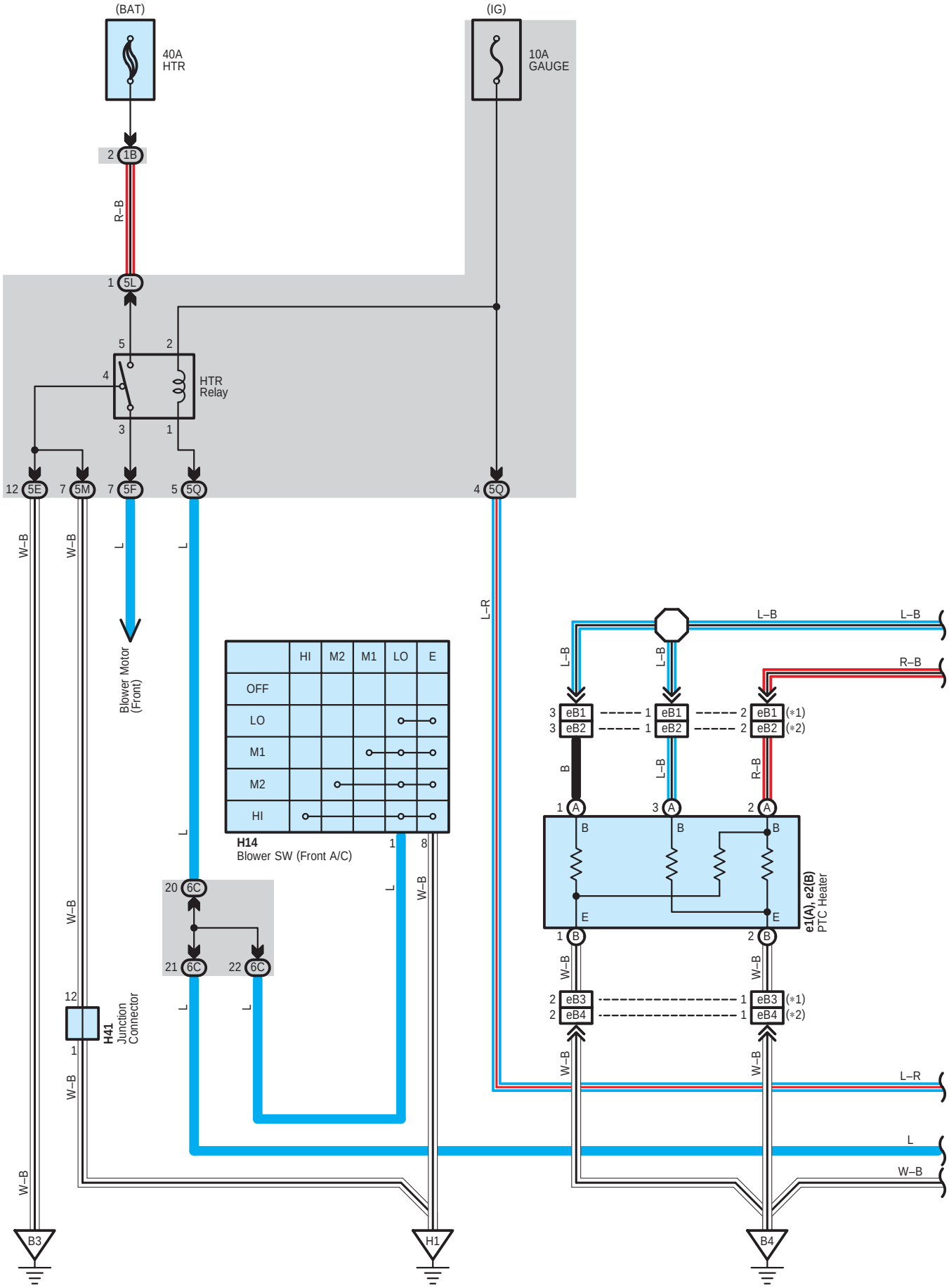
(BAT)
(IG)
40A HTR
10A GAUGE
2 1B
R–B
1 5L
5
2
4
HTR Relay
3
1
12 5E
7 5M
7 5F
5 5Q
4 5Q
W–B
W–B
L
L
L–R
Blower Motor (Front)
HI M2 M1 LO E
OFF
LO
M1
M2
HI
H14
Blower SW (Front A/C)
1
8
L
W–B
20 6C
21 6C
22 6C
L
L
12
1
H41
Junction Connector
W–B
W–B
L–B
L–B
L–B
R–B
3 eB1
3 eB2
1 eB1
1 eB2
2 eB1 (*1)
2 eB2 (*2)
B
L–B
R–B
1 A
3 A
2 A
B
B
B
E
E
e1(A), e2(B)
PTC Heater
1 B
2 B
W–B
W–B
2 eB3
2 eB4
1 eB3 (*1)
1 eB4 (*2)
W–B
W–B
L–R
L
W–B
B3
H1
B4

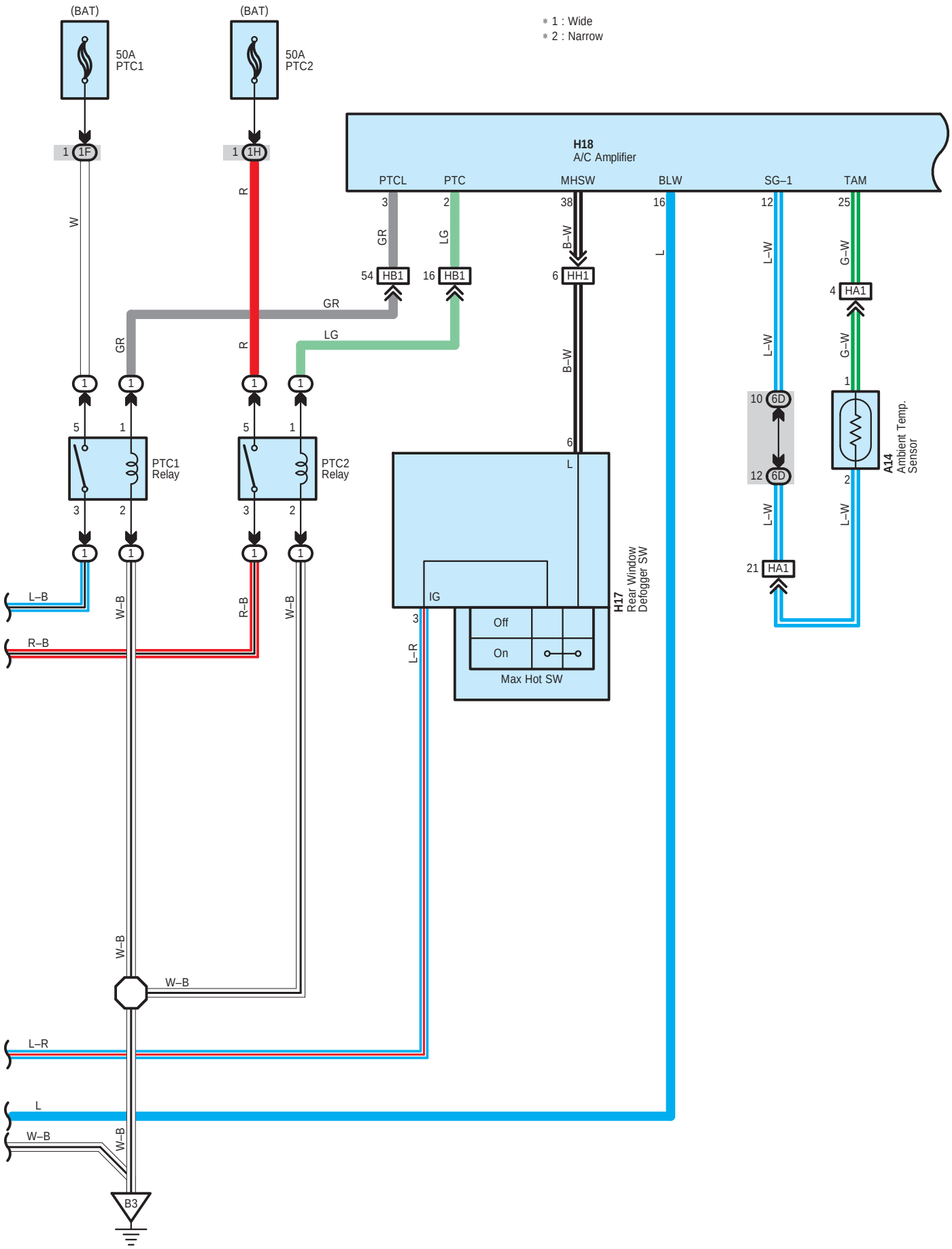
(BAT)
50A
PTC1
(BAT)
50A
PTC2
* 1 : Wide
* 2 : Narrow
H18
A/C Amplifier
PTCL
PTC
MHSW
BLW
SG–1
TAM
1F
1H
W
R
GR
LG
B–W
L
L–W
G–W
HB1
HH1
HA1
6D
PTC1
Relay
PTC2
Relay
H17
Rear Window
Defogger SW
IG
Off
On
Max Hot SW
A14
Ambient Temp.
Sensor
L–B
R–B
W–B
L–R
B3

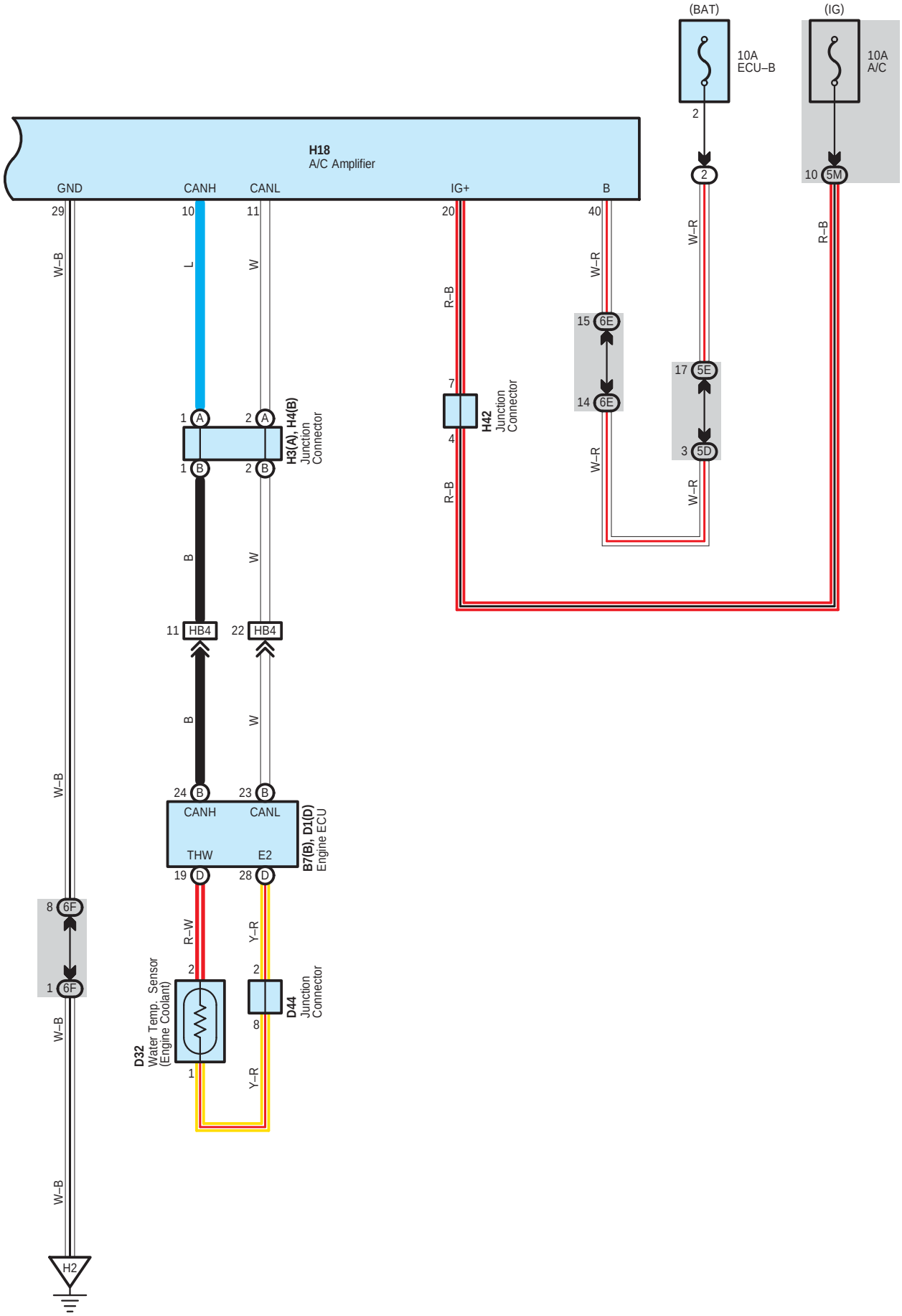
(BAT)
(IG)
10A
ECU–B
10A
A/C
2
2
10
5M
H18
A/C Amplifier
GND
CANH
CANL
IG+
B
29
10
11
20
40
W–B
L
W
R–B
W–R
R–B
15
6E
14
6E
17
5E
3
5D
7
4
H42
Junction
Connector
1
A
2
A
1
B
2
B
H3(A), H4(B)
Junction
Connector
B
W
11
HB4
22
HB4
B
W
24
B
23
B
CANH
CANL
THW
E2
19
D
28
D
B7(B), D1(D)
Engine ECU
8
6F
1
6F
R–W
Y–R
2
2
8
1
D32
Water Temp. Sensor
(Engine Coolant)
D44
Junction
Connector
Y–R
W–B
W–B
W–B
H2

## : Parts Location

| Code | | See Page | Code | | See Page | Code | | See Page |
|---|---|---|---|---|---|---|---|---|
| A14 | | 48 (LHD) | H3 | A | 42, 49 (LHD) | H41 | | 49 (LHD) |
| | | 56 (RHD) | | | 42, 57 (RHD) | | | 57 (RHD) |
| B7 | B | 45 (*2) | H4 | B | 42, 49 (LHD) | H42 | | 49 (LHD) |
| | | 53 (*5) | | | 42, 57 (RHD) | | | 57 (RHD) |
| D1 | D | 45 (*2) | H14 | | 49 (LHD) | e1 | A | 48 (LHD) |
| | | 53 (*5) | | | 57 (RHD) | | | 56 (RHD) |
| D32 | | 45 (*2) | H17 | | 49 (LHD) | e2 | B | 48 (LHD) |
| | | 53 (*5) | | | 57 (RHD) | | | 56 (RHD) |
| D44 | | 45 (*2) | H18 | | 49 (LHD) | | | |
| | | 53 (*5) | | | 57 (RHD) | | | |

## : Relay Blocks

| Code | See Page | Relay Blocks (Relay Block Location) |
|---|---|---|
| 1 | 23 (*8) | Engine Room R/B No.1 (Engine Compartment Front) |
| 2 | 28 | Engine Room R/B No.2 (Inside of Battery Room) |

## : Junction Block and Wire Harness Connector

| Code | See Page | Junction Block and Wire Harness (Connector Location) |
|---|---|---|
| 1B | 24 | Engine Room Main Wire and Engine Room J/B No.1 (Engine Compartment Front) |
| 1F | | |
| 1H | | |
| 5D | 30 | Instrument Panel Wire and Instrument Panel J/B (Left Side of Instrument Panel) |
| 5E | 30 | Engine Room Main Wire and Instrument Panel J/B (Left Side of Instrument Panel) |
| 5F | 30 | Instrument Panel Wire and Instrument Panel J/B (Left Side of Instrument Panel) |
| 5L | 30 | Engine Room Main Wire and Instrument Panel J/B (Left Side of Instrument Panel) |
| 5M | 31 | Instrument Panel Wire and Instrument Panel J/B (Left Side of Instrument Panel) |
| 5Q | | |
| 6C | 38 (LHD) | Instrument Panel Wire and Center J/B (Instrument Panel Reinforcement LH) |
| | 38 (RHD) | Instrument Panel Wire and Center J/B (Instrument Panel Reinforcement RH) |
| 6D | 38 (LHD) | Instrument Panel Wire and Center J/B (Instrument Panel Reinforcement LH) |
| | 38 (RHD) | Instrument Panel Wire and Center J/B (Instrument Panel Reinforcement RH) |
| 6E | 38 (LHD) | Instrument Panel Wire and Center J/B (Instrument Panel Reinforcement LH) |
| | 38 (RHD) | Instrument Panel Wire and Center J/B (Instrument Panel Reinforcement RH) |
| 6F | 38 (LHD) | Instrument Panel Wire and Center J/B (Instrument Panel Reinforcement LH) |
| | 38 (RHD) | Instrument Panel Wire and Center J/B (Instrument Panel Reinforcement RH) |

* 1 : LHD 2TR–FE * 2 : LHD 2KD–FTV * 3 : LHD 5L–E * 4 : RHD 2TR–FE * 5 : RHD 2KD–FTV * 6 : RHD 5L–E * 7 : 2TR–FE
* 8 : 2KD–FTV, 5L–E

# PTC Heater (2KD–FTV)

**: Connector Joining Wire Harness and Wire Harness**

| Code | See Page | Joining Wire Harness and Wire Harness (Connector Location) |
|---|---|---|
| HA1 | 64 (LHD) | Instrument Panel Wire and Cowl to Head Lamp Wire (Under the Instrument Panel J/B) |
| | 72 (RHD) | |
| HB1 | 64 (LHD) | Instrument Panel Wire and Engine Room Main Wire (Under the Instrument Panel J/B) |
| | 72 (RHD) | |
| HB4 | 64 (LHD) | |
| | 72 (RHD) | |
| HH1 | 64 (LHD) | Instrument Panel Wire and Instrument Panel Wire (Near the Steering Column) |
| | 72 (RHD) | Instrument Panel Wire and Instrument Panel Wire (Instrument Panel Reinforcement RH) |
| eB1 | 65 (LHD) | Heater Wire and Engine Room Main Wire (Near the A/C Unit) |
| | 73 (RHD) | |
| eB2 | 65 (LHD) | |
| | 73 (RHD) | |
| eB3 | 65 (LHD) | |
| | 73 (RHD) | |
| eB4 | 65 (LHD) | |
| | 73 (RHD) | |

**: Ground Points**

| Code | See Page | Ground Points Location |
|---|---|---|
| B3 | 61 (*2) | Front Floor Panel Left |
| | 69 (*5) | |
| B4 | 64 (LHD) | Cowl Side Panel LH |
| | 72 (RHD) | |
| H1 | 64 (LHD) | Instrument Panel Reinforcement |
| | 72 (RHD) | |
| H2 | 64 (LHD) | |
| | 72 (RHD) | |

* 1 : LHD 2TR–FE * 2 : LHD 2KD–FTV * 3 : LHD 5L–E * 4 : RHD 2TR–FE * 5 : RHD 2KD–FTV * 6 : RHD 5L–E * 7 : 2TR–FE
* 8 : 2KD–FTV, 5L–E

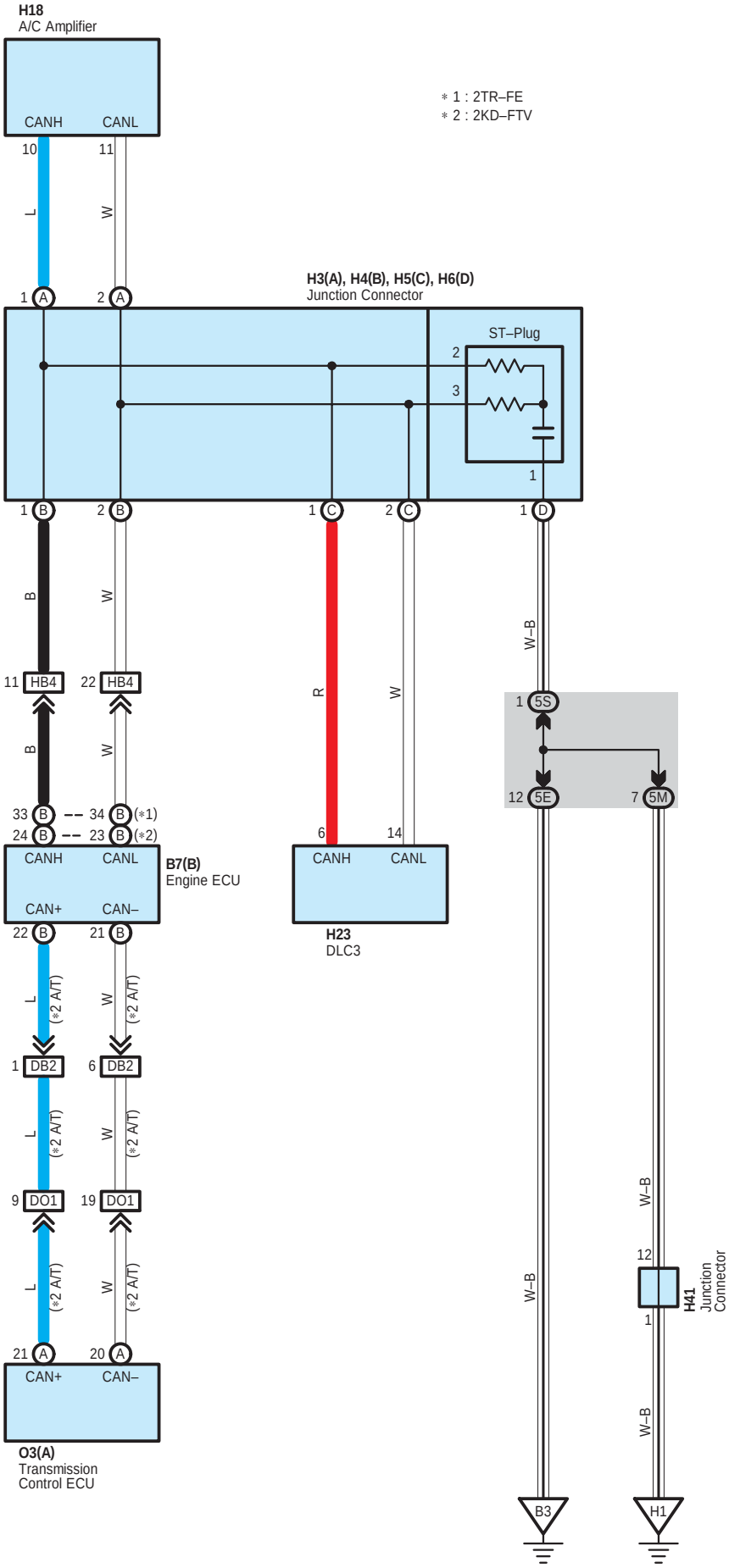
H18
A/C Amplifier
CANH
CANL
10
11
L
W
1 A
2 A
H3(A), H4(B), H5(C), H6(D)
Junction Connector
ST–Plug
2
3
1
1 B
2 B
1 C
2 C
1 D
B
W
R
W
W–B
11 HB4
22 HB4
1 5S
12 5E
7 5M
33 B
34 B (*1)
24 B
23 B (*2)
6
14
CANH
CANL
B7(B)
Engine ECU
CAN+
CAN–
22 B
21 B
(*2 A/T)
1 DB2
6 DB2
9 DO1
19 DO1
21 A
20 A
O3(A)
Transmission
Control ECU
H23
DLC3
12
1
H41
Junction
Connector
B3
H1
* 1 : 2TR–FE
* 2 : 2KD–FTV

**System Outline**

Multiplex communication system (CAN) uses a serial communication protocol and communicates with a differential voltage. In this network system, TERMINALS CANH, CANL, CAN+ and CAN– are used for communication between the ECUs, and excellent data communication speed and communication error detecting facility are provided. This system is working for the following systems:

* Engine Control
* ECT and A/T Indicator
* Front Air Conditioner

**: Parts Location**

| Code | | See Page | Code | | See Page | Code | | See Page |
|---|---|---|---|---|---|---|---|---|
| B7 | B | 44 (*1) | H4 | B | 42, 57 (RHD) | H23 | | 49 (LHD) |
| | | 45 (*2) | H5 | C | 42, 49 (LHD) | | | 57 (RHD) |
| | | 52 (*4) | | | 42, 57 (RHD) | H41 | | 49 (LHD) |
| | | 53 (*5) | H6 | D | 42, 49 (LHD) | | | 57 (RHD) |
| H3 | A | 42, 49 (LHD) | | | 42, 57 (RHD) | O3 | A | 48 (LHD) |
| | | 42, 57 (RHD) | H18 | | 49 (LHD) | | | 56 (RHD) |
| H4 | B | 42, 49 (LHD) | | | 57 (RHD) | | | |

**: Junction Block and Wire Harness Connector**

| Code | See Page | Junction Block and Wire Harness (Connector Location) |
|---|---|---|
| 5E | 30 | Engine Room Main Wire and Instrument Panel J/B (Left Side of Instrument Panel) |
| 5M | 31 | Instrument Panel Wire and Instrument Panel J/B (Left Side of Instrument Panel) |
| 5S | | |

**: Connector Joining Wire Harness and Wire Harness**

| Code | See Page | Joining Wire Harness and Wire Harness (Connector Location) |
|---|---|---|
| DB2 | 61 (*2) | Engine Wire and Engine Room Main Wire (Front Side of Engine Room R/B No.1) |
| | 69 (*5) | |
| DO1 | 61 (*2) | Engine Wire and Floor Wire (Front Floor Panel Right) |
| | 69 (*5) | |
| HB4 | 64 (LHD) | Instrument Panel Wire and Engine Room Main Wire (Under the Instrument Panel J/B) |
| | 72 (RHD) | |

**: Ground Points**

| Code | See Page | Ground Points Location |
|---|---|---|
| B3 | 60 (*1) | Front Floor Panel Left |
| | 61 (*2) | |
| | 68 (*4) | |
| | 69 (*5) | |
| H1 | 64 (LHD) | Instrument Panel Reinforcement |
| | 72 (RHD) | |

* 1 : LHD 2TR–FE * 2 : LHD 2KD–FTV * 3 : LHD 5L–E * 4 : RHD 2TR–FE * 5 : RHD 2KD–FTV * 6 : RHD 5L–E * 7 : 2TR–FE
* 8 : 2KD–FTV, 5L–E

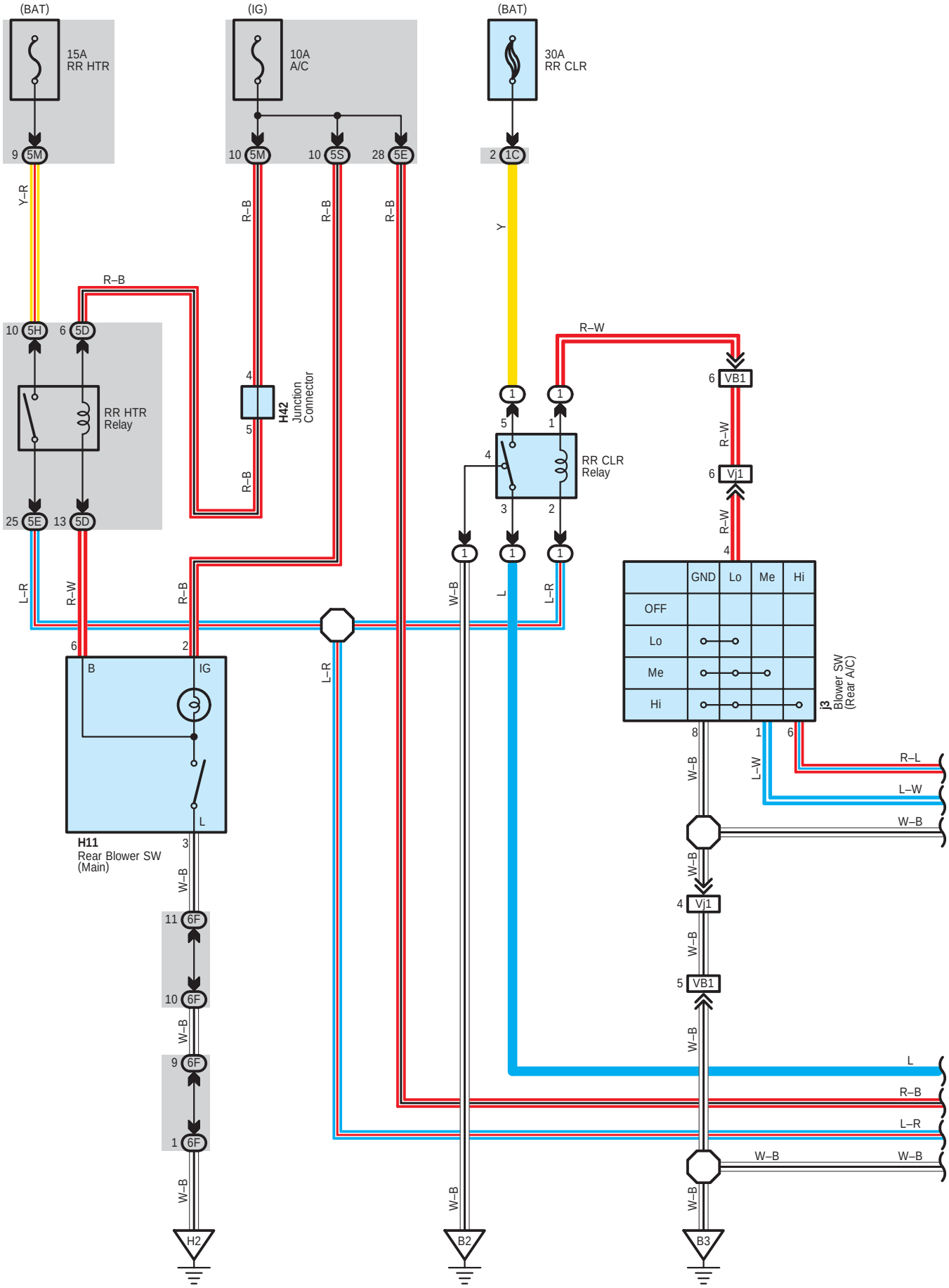
(BAT)
15A
RR HTR
9 5M
(IG)
10A
A/C
10 5M
10 5S
28 5E
(BAT)
30A
RR CLR
2 1C
Y–R
R–B
R–B
R–B
Y
R–B
10 5H
6 5D
RR HTR
Relay
4
5
H42
Junction
Connector
R–B
R–W
1
1
5
1
4
RR CLR
Relay
3
2
6 VB1
R–W
6 Vj1
R–W
4
25 5E
13 5D
L–R
R–W
R–B
W–B
L
L–R
GND
Lo
Me
Hi
OFF
Lo
Me
Hi
J3
Blower SW
(Rear A/C)
6
2
B
IG
L
H11
Rear Blower SW
(Main)
3
L–R
8
1
6
R–L
L–W
W–B
W–B
L–W
W–B
4 Vj1
W–B
5 VB1
W–B
11 6F
10 6F
W–B
9 6F
1 6F
W–B
L
R–B
L–R
W–B
W–B
W–B
W–B
W–B
H2
B2
B3

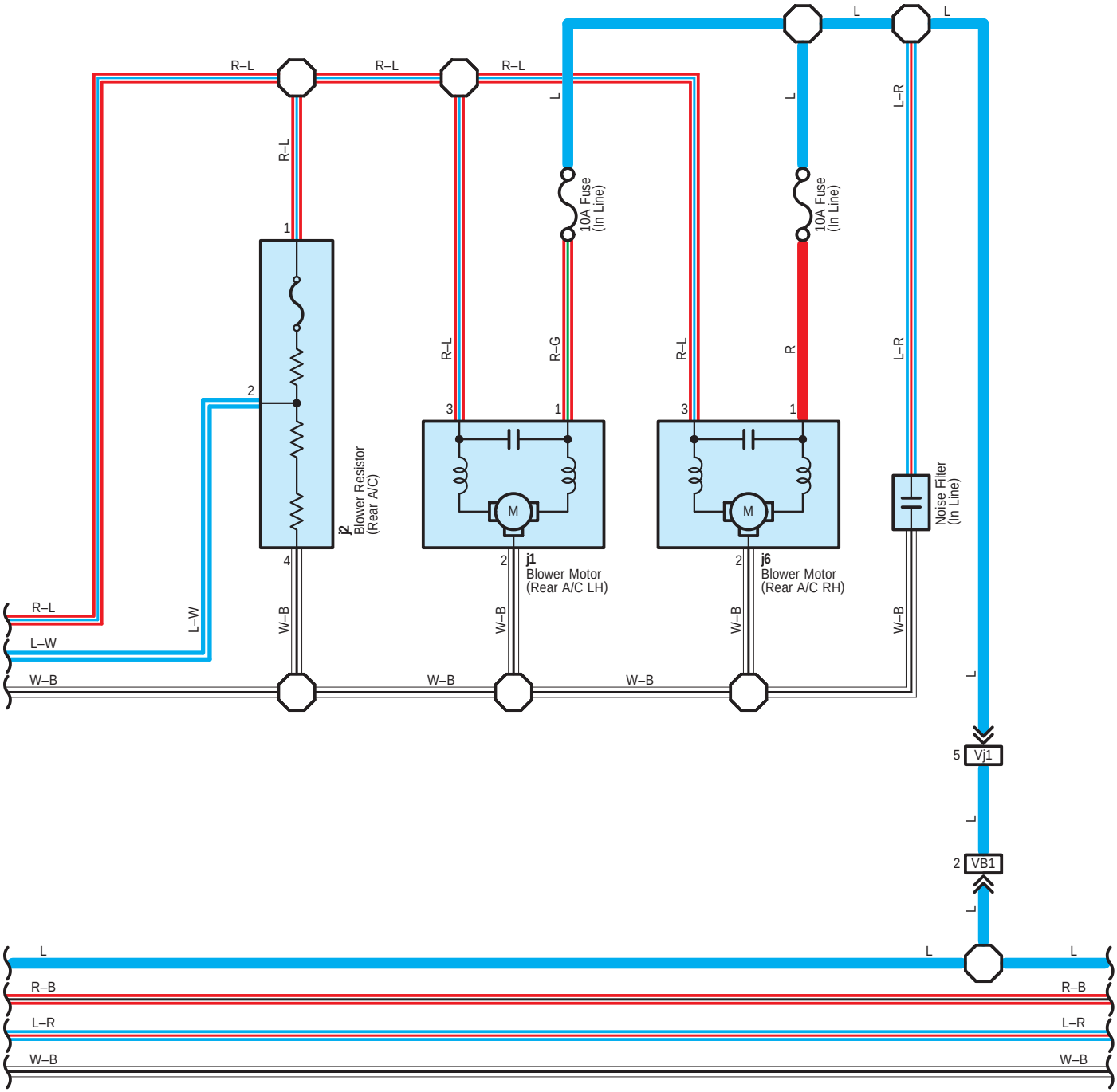
R–L
R–L
R–L
L
L
L
L–R
R–L
10A Fuse
(In Line)
10A Fuse
(In Line)
1
2
3
4
j2
Blower Resistor
(Rear A/C)
R–L
R–G
R–L
R
L–R
3
1
3
1
M
M
Noise Filter
(In Line)
j1
Blower Motor
(Rear A/C LH)
j6
Blower Motor
(Rear A/C RH)
2
2
R–L
L–W
W–B
L–W
W–B
W–B
W–B
W–B
W–B
L
5
Vj1
L
2
VB1
L
L
L
L
R–B
R–B
L–R
L–R
W–B
W–B

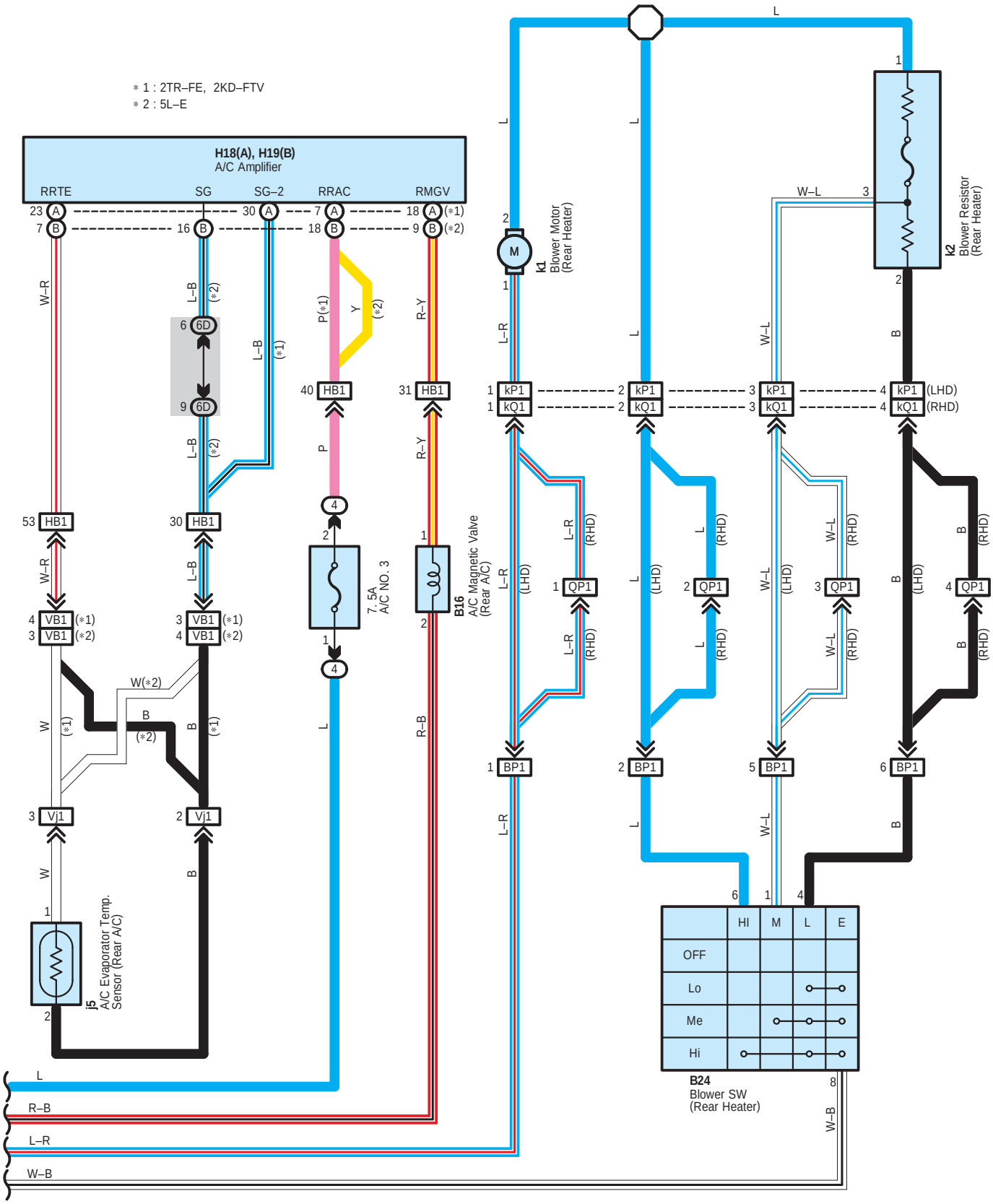

∗ 1 : 2TR–FE, 2KD–FTV
∗ 2 : 5L–E
H18(A), H19(B)
A/C Amplifier
RRTE
SG
SG–2
RRAC
RMGV
k1
Blower Motor
(Rear Heater)
k2
Blower Resistor
(Rear Heater)
7. 5A
A/C NO. 3
B16
A/C Magnetic Valve
(Rear A/C)
j5
A/C Evaporator Temp.
Sensor (Rear A/C)
B24
Blower SW
(Rear Heater)
HI
M
L
E
OFF
Lo
Me
Hi

## System Outline

### 1. Blower Motor Operation

* Low speed operation
  When the blower SW (Rear A/C) is moved to LO position, current flows to TERMINAL 4 of the blower SW (Rear A/C) to GROUND, activating the RR CLR relay. This causes the current to flow from the RR CLR fuse to TERMINAL 5 of the RR CLR relay to TERMINAL 3 to TERMINAL 1 of the blower motor (Rear A/C LH, RH) to TERMINAL 3 to TERMINAL 1 of the blower resistor (Rear A/C) to TERMINAL 4 to GROUND, causing the blower motor (Rear A/C LH, RH) to rotate at low speed.

* Medium speed operation
  When the blower SW (Rear A/C) is moved to Me position, current flows to TERMINAL 4 of the blower SW (Rear A/C) to GROUND, turning the RR CLR relay to switch on. This causes the current to flow from the RR CLR fuse to TERMINAL 5 of the RR CLR relay to TERMINAL 3 to TERMINAL 1 of the blower motor (Rear A/C LH, RH) to TERMINAL 3 to TERMINAL 1 of the blower resistor (Rear A/C) to TERMINAL 2 to TERMINAL 1 of the blower SW (Rear A/C) to GROUND. At this time, the blower resistance of the blower resistor (Rear A/C) is less than at low speed, so the blower motor (Rear A/C LH, RH) rotates at medium speed.

* High speed operation
  When the blower SW (Rear A/C) is moved to HI position, current flows to TERMINAL 4 of the blower SW (Rear A/C) to GROUND, turning the RR CLR relay to switch on.
  This causes the current to flow from the RR CLR fuse to TERMINAL 5 of the RR CLR relay to TERMINAL 3 to TERMINAL 1 of the blower motor (Rear A/C LH, RH) to TERMINAL 3 to TERMINAL 6 of the blower SW (Rear A/C) to GROUND, causing the blower motor (Rear A/C LH, RH) to rotate at high speed.

**○ : Parts Location**

| Code | See Page | Code | | See Page | Code | See Page |
|---|---|---|---|---|---|---|
| B16 | 44 (*1) | H18 | A | 49 (LHD) | j3 | 51 (LHD) |
| | 45 (*2) | | | 57 (RHD) | | 59 (RHD) |
| | 46 (*3) | H19 | B | 49 (LHD) | j5 | 51 (LHD) |
| | 52 (*4) | | | 57 (RHD) | | 59 (RHD) |
| | 53 (*5) | H42 | | 49 (LHD) | j6 | 51 (LHD) |
| | 54 (*6) | | | 57 (RHD) | | 59 (RHD) |
| B24 | 50 (LHD) | j1 | | 51 (LHD) | k1 | 51 (LHD) |
| | 58 (RHD) | | | 59 (RHD) | | 59 (RHD) |
| H11 | 49 (LHD) | j2 | | 51 (LHD) | k2 | 51 (LHD) |
| | 57 (RHD) | | | 59 (RHD) | | 59 (RHD) |

**▭ : Relay Blocks**

| Code | See Page | Relay Blocks (Relay Block Location) |
|---|---|---|
| 1 | 22 (*7) | Engine Room R/B No.1 (Engine Compartment Front) |
| | 23 (*8) | |
| 4 | 29 | Instrument Panel R/B (Under the Glove Box) |

* 1 : LHD 2TR–FE * 2 : LHD 2KD–FTV * 3 : LHD 5L–E * 4 : RHD 2TR–FE * 5 : RHD 2KD–FTV * 6 : RHD 5L–E * 7 : 2TR–FE
* 8 : 2KD–FTV, 5L–E

**: Junction Block and Wire Harness Connector**

| Code | See Page | Junction Block and Wire Harness (Connector Location) |
|---|---|---|
| 1C | 24 | Engine Room Main Wire and Engine Room J/B No.1 (Engine Compartment Front) |
| 5D | 30 | Instrument Panel Wire and Instrument Panel J/B (Left Side of Instrument Panel) |
| 5E | 30 | Engine Room Main Wire and Instrument Panel J/B (Left Side of Instrument Panel) |
| 5H | 30 | Instrument Panel Wire and Instrument Panel J/B (Left Side of Instrument Panel) |
| 5M | 31 | |
| 5S | | |
| 6D | 38 (LHD) | Instrument Panel Wire and Center J/B (Instrument Panel Reinforcement LH) |
| | 38 (RHD) | Instrument Panel Wire and Center J/B (Instrument Panel Reinforcement RH) |
| 6F | 38 (LHD) | Instrument Panel Wire and Center J/B (Instrument Panel Reinforcement LH) |
| | 38 (RHD) | Instrument Panel Wire and Center J/B (Instrument Panel Reinforcement RH) |

**: Connector Joining Wire Harness and Wire Harness**

| Code | See Page | Joining Wire Harness and Wire Harness (Connector Location) |
|---|---|---|
| BP1 | 66 (LHD) | Engine Room Main Wire and Frame Wire (Under the Floor Panel) |
| | 74 (RHD) | |
| HB1 | 64 (LHD) | Instrument Panel Wire and Engine Room Main Wire (Under the Instrument Panel J/B) |
| | 72 (RHD) | |
| QP1 | 74 (RHD) | Frame No.2 Wire and Frame Wire (Near the Fuel Tank) |
| VB1 | 66 (LHD) | Roof No.3 Wire and Engine Room Main Wire (Center Pillar LH) |
| | 74 (RHD) | |
| Vj1 | 66 (LHD) | Roof No.3 Wire and Rear A/C Sub Wire (Left Side of Rear A/C Unit) |
| | 74 (RHD) | |
| kP1 | 66 (LHD) | Rear A/C Sub Wire and Frame Wire (Near the Rear Heater Unit) |
| kQ1 | 74 (RHD) | Rear A/C Sub Wire and Frame No.2 Wire (Near the Rear Heater Unit) |

**: Ground Points**

| Code | See Page | Ground Points Location |
|---|---|---|
| B2 | 60 (*1) | Front Floor Panel Right |
| | 61 (*2) | |
| | 62 (*3) | |
| | 68 (*4) | |
| | 69 (*5) | |
| | 70 (*6) | |
| B3 | 60 (*1) | Front Floor Panel Left |
| | 61 (*2) | |
| | 62 (*3) | |
| | 68 (*4) | |
| | 69 (*5) | |
| | 70 (*6) | |
| H2 | 64 (LHD) | Instrument Panel Reinforcement |
| | 72 (RHD) | |

* 1 : LHD 2TR–FE * 2 : LHD 2KD–FTV * 3 : LHD 5L–E * 4 : RHD 2TR–FE * 5 : RHD 2KD–FTV * 6 : RHD 5L–E * 7 : 2TR–FE
* 8 : 2KD–FTV, 5L–E

# HIACE
# ELECTRICAL WIRING DIAGRAM
# SYSTEM CIRCUITS


| | Page |
|---|---|
| ABS | 218 |
| Audio System | 248 |
| Automatic Light Control | 156 |
| Back–Up Light | 140 |
| Charging (2TR–FE, 2KD–FTV) | 86 |
| Charging (5L–E) | 88 |
| Cigarette Lighter | 236 |
| Clock | 250 |
| Combination Meter | 250 |
| Cooling Fan (2TR–FE, 2KD–FTV) | 256 |
| Cooling Fan (5L–E) | 262 |
| DLC3 | 122 |
| Door Closer | 188 |
| Door Lock Control (LHD) | 176 |
| Door Lock Control (RHD) | 182 |
| ECT and A/T Indicator (2KD–FTV) | 210 |
| ECT and A/T Indicator (2TR–FE) | 204 |
| Engine Control (2KD–FTV) | 104 |
| Engine Control (2TR–FE) | 92 |
| Engine Control (5L–E) | 114 |
| Front Air Conditioner (2TR–FE, 2KD–FTV) | 268 |
| Front Air Conditioner (5L–E) | 278 |
| Front Fog Light | 128 |
| Front Wiper and Washer | 162 |
| Headlight | 124 |
| Headlight Beam Level Control | 160 |
| Horn | 238 |
| Ignition | 90 |
| Illumination | 146 |
| Interior Light | 150 |
| Key Reminder | 230 |
| Light Reminder | 230 |
| Multiplex Communication System (CAN) | 288 |
| Power Source | 78 |
| Power Window (LHD) | 168 |
| Power Window (RHD) | 172 |
| PTC Heater (2KD–FTV) | 282 |
| Rear Air Conditioner | 290 |
| Rear Fog Light | 130 |
| Rear Window Defogger | 240 |
| Rear Wiper and Washer | 166 |
| Remote Control Mirror | 234 |
| Seat Belt Warning | 232 |
| Shift Lock | 228 |
| SRS | 223 |
| Starting | 82 |
| Stop Light | 138 |